OMRON

AC Servomotors/Servo Drives

1S-series with Built-in

EtherCAT® Communications and Safety Functionality

User's Manual

R88M-1AL□/-1AM□ (AC Servomotors)
R88D-1SAN□-ECT (AC Servo Drives)

SYSMAC
always in control

I621-E1-04

NOTE

All rights reserved. No part of this publication may be reproduced, stored in a retrieval system, or transmitted, in any form, or by any means, mechanical, electronic, photocopying, recording, or otherwise, without the prior written permission of OMRON.

No patent liability is assumed with respect to the use of the information contained herein. Moreover, because OMRON is constantly striving to improve its high-quality products, the information contained in this manual is subject to change without notice. Every precaution has been taken in the preparation of this manual. Nevertheless, OMRON assumes no responsibility for errors or omissions. Neither is any liability assumed for damages resulting from the use of the information contained in this publication.

Trademarks

- Sysmac and SYSMAC are trademarks or registered trademarks of OMRON Corporation in Japan and other countries for OMRON factory automation products.
- EtherCAT® is registered trademark and patented technology, licensed by Beckhoff Automation GmbH, Germany.
- Safety over EtherCAT® is registered trademark and patented technology, licensed by Beckhoff Automation GmbH, Germany.
- ODVA, CIP, CompoNet, DeviceNet, and EtherNet/IP are trademarks of ODVA.

Other company names and product names in this document are the trademarks or registered trademarks of their respective companies.

Introduction

Thank you for purchasing a 1S-series Servo Drive Advance Type. This User's Manual describes the installation and wiring methods of the 1S-series Servo Drives and parameter setting method which is required for the operation, as well as troubleshooting and inspection methods.

Intended Audience

This User's Manual is intended for the following personnel, who must also have electrical knowledge (certified electricians or individuals who have equivalent knowledge).

- Personnel in charge of introducing the FA equipment
- Personnel in charge of designing the FA systems
- Personnel in charge of installing and connecting the FA equipment
- Personnel in charge of managing the FA systems and facilities

Notice

This User's Manual contains information you need to know to correctly use the 1S-series Servo Drives and peripheral equipment.

Before using the Servo Drive, read this User's Manual and gain a full understanding of the information provided herein.

After you finished reading this User's Manual, keep it in a convenient place so that it can be referenced at any time.

Make sure this User's Manual is delivered to the end user.

Manual Structure

This section explains the page structure and symbol icons.

Page Structure

The following page structure is used in this manual.

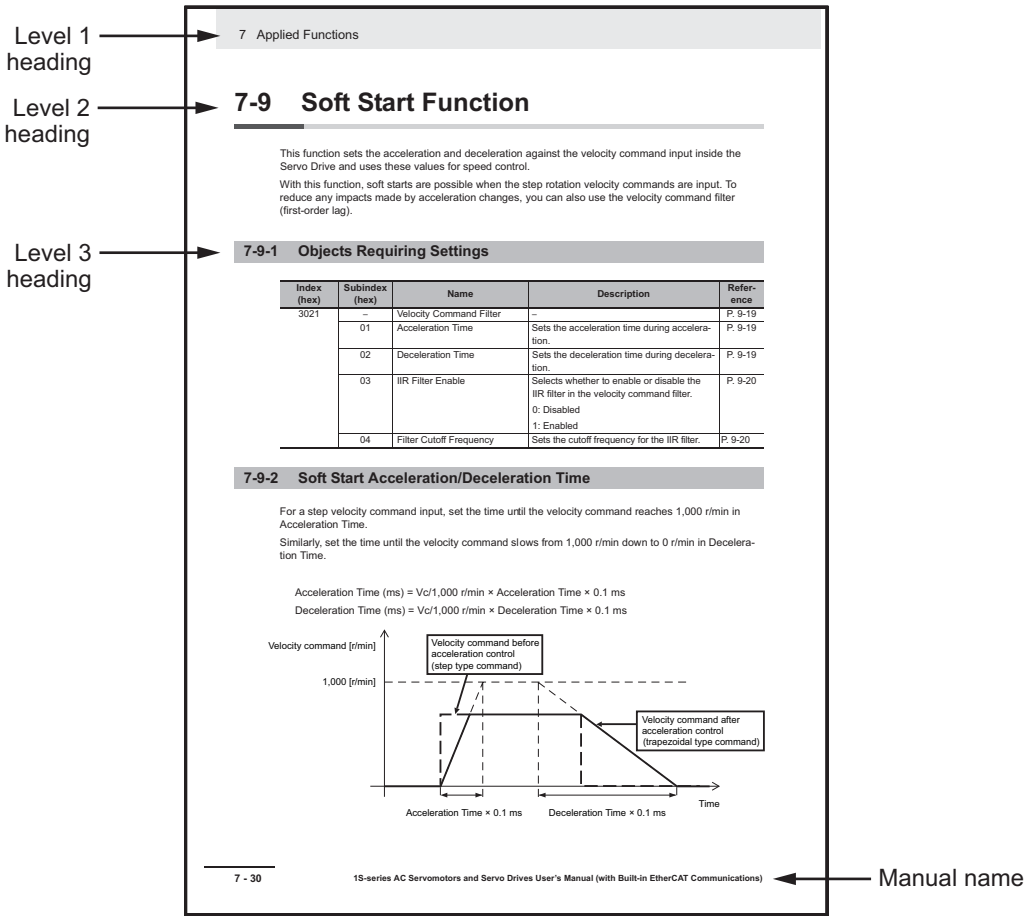

Note The above page is only a sample for illustrative purposes. It is not the actual content of this User's Manual.

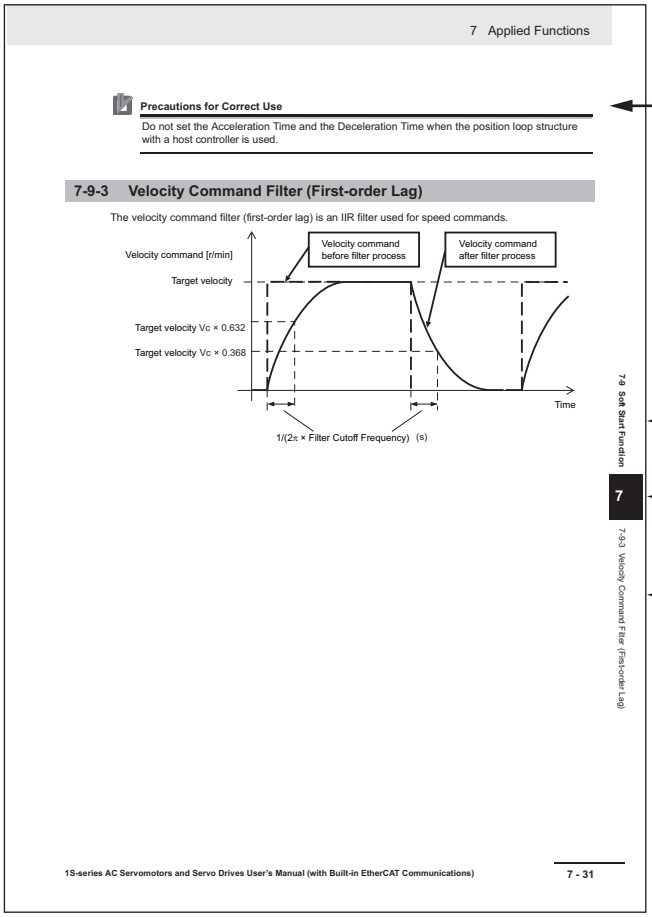

Special information
Icons indicate precautions, additional information, or reference information.

Level 2 heading
Gives the current heading.

Page tab
Gives the number of the main section.

Level 3 heading
Gives the current heading.

Note This illustration is provided only as a sample. It may not literally appear in this manual.

Special Information

Special information in this manual is classified as follows:

Precautions for Safe Use

Precautions on what to do and what not to do to ensure safe usage of the product.

Precautions for Correct Use

Precautions on what to do and what not to do to ensure proper operation and performance.

Additional Information

Additional information to read as required.

This information is provided to increase understanding or make operation easier.

Version Information

Information on differences in specifications and functionality for Servo Drives with different unit versions and for different versions of the Sysmac Studio is given.

Manual Configuration

This User's Manual consists of the following sections.

Read the necessary section or sections by reference to the following table.

Section		Outline
Section 1	Features and System Configuration	This section explains the features of the Servo Drive and name of each part.
Section 2	Models and External Dimensions	This section explains the models of Servo Drives, Servomotors, Decelerators, and peripheral devices, and provides the external dimensions and mounting dimensions.
Section 3	Specifications	This section provides the general specifications, characteristics, connector specifications, and I/O circuits of the Servo Drives as well as the general specifications, characteristics, encoder specifications of the Servomotors and other peripheral devices.
Section 4	Configuration and Wiring	This section explains the conditions for installing Servo Drives, Servomotors, and Decelerators, the wiring methods including wiring conforming to EMC Directives, the regenerative energy calculation methods, as well as the performance of External Regeneration Resistors.
Section 5	EtherCAT Communications	This section explains EtherCAT communications under the assumption that the Servo Drive is connected to a Machine Automation Controller NJ/NX-series CPU Unit, NY-series IPC Machine Controller, or Position Control Unit (Model: CJ1W-NC□8□).
Section 6	Basic Control Functions	This section explains the outline and settings of basic control functions.
Section 7	Applied Functions	This section provides the outline and settings of the applied functions such as electronic gear and gain switching.
Section 8	Safety Function	This section provides the outline of each safety function (STO, SS1, SS2, SOS, SLS, SLP, SDI, and SBC) and examples of operation and connection.
Section 9	Details on Servo Parameters	This section explains the details on each servo parameter, including the set values, settings, and the display.
Section 10	Operation	This section provides the operational procedure and explains how to operate in each mode.
Section 11	Adjustment Functions	This section explains the functions, setting methods, and items to note regarding adjustments.
Section 12	Troubleshooting	This section explains the items to check when problems occur, and troubleshooting by the use of error displays or operation state.
Section 13	Maintenance and Inspection	This section explains maintenance and inspection of the Servomotors and Servo Drives.
Appendices		The appendices provide explanation for the profile that is used to control the Servo Drive, lists of objects, and Sysmac error status codes.

Sections in this Manual

1 Features and System Configuration

2 Models and External Dimensions

3 Specifications

4 Configuration and Wiring

5 EtherCAT Communications

6 Basic Control Functions

7 Applied Functions

8 Safety Function

9 Details on Servo Parameters

10 Operation

11 Adjustment Functions

12 Troubleshooting

13 Maintenance and Inspection

A Appendices

I Index

CONTENTS

Introduction **1**

Manual Structure **2**

Manual Configuration **4**

Sections in this Manual **5**

Terms and Conditions Agreement **18**

Safety Precautions **20**

Items to Check After Unpacking **31**

Related Manuals **39**

Terminology **44**

Revision History **47**

Section 1 Features and System Configuration

1-1 Outline **1-2**
1-1-1 Features of 1S-series Servo Drive Advance Type 1-2
1-1-2 EtherCAT 1-3
1-1-3 Object Dictionary 1-4

1-2 System Configuration **1-5**

1-3 Names and Functions **1-6**
1-3-1 Servo Drive Part Names 1-6
1-3-2 Servo Drive Functions 1-10
1-3-3 Servomotor Part Names 1-13
1-3-4 Servomotor Functions 1-15
1-3-5 Shield Clamp Part Names 1-16

1-4 System Block Diagram **1-17**

1-5 Applicable Standards **1-21**
1-5-1 EU Directives 1-21
1-5-2 UL and cUL Standards 1-22
1-5-3 Korean Radio Regulations (KC) 1-23
1-5-4 SEMI F47 1-23
1-5-5 Australian EMC Labeling Requirements (RCM) 1-23
1-5-6 EAC Requirements 1-23

1-6 Unit Versions **1-24**
1-6-1 Confirmation Method 1-24
1-6-2 Unit Versions and Sysmac Studio Versions 1-24

1-7 Procedures to Start Operation **1-25**
1-7-1 Overall Procedure 1-25
1-7-2 Procedure Details 1-27

Section 2 Models and External Dimensions

2-1 Servo System Configuration **2-2**

2-2 How to Read Model Numbers 2-4
2-2-1 Servo Drive 2-4
2-2-2 Servomotor 2-5
2-2-3 Integrated Cable 2-6
2-2-4 Decelerator 2-7

2-3 Model Tables 2-9
2-3-1 Servo Drive Model Table 2-9
2-3-2 Servomotor Model Tables 2-10
2-3-3 Servo Drive and Servomotor Combination Tables 2-12
2-3-4 Decelerator Model Tables 2-13
2-3-5 Servomotor and Decelerator Combination Tables 2-15
2-3-6 Table of Integrated Cables, Connectors, and Shield Clamps 2-16
2-3-7 External Regeneration Resistor and External Regeneration Resistance Unit Model Tables 2-19
2-3-8 Reactor Model Table 2-20

2-4 External and Mounting Dimensions 2-21
2-4-1 Servo Drive Dimensions 2-21
2-4-2 Servomotor Dimensions 2-23
2-4-3 Cable Outlet Direction of Integrated Connector 2-43
2-4-4 Cable Wiring Dimension for a Case of Servomotor Installing 2-44
2-4-5 Decelerator Dimensions 2-46
2-4-6 Dimensions of External Regeneration Resistors and External Regeneration Resistance Units 2-55
2-4-7 Reactor Dimensions 2-56
2-4-8 Noise Filter Dimensions 2-62

Section 3 Specifications

3-1 Servo Drive Specifications 3-3
3-1-1 General Specifications 3-3
3-1-2 Characteristics 3-4
3-1-3 EtherCAT Communications Specifications 3-8
3-1-4 Main Circuit and Motor Connections 3-9
3-1-5 Control I/O Connector (CN1) Specifications 3-14
3-1-6 Control Input Circuits 3-16
3-1-7 Control Input Details 3-17
3-1-8 Control Output Circuits 3-18
3-1-9 Control Output Details 3-19
3-1-10 Encoder Pulse Output Specifications 3-19
3-1-11 Safety Signal Connector (CN14) Specifications 3-20
3-1-12 Safe Brake Control Connector (CN15) Specifications 3-24
3-1-13 Brake Interlock Connector (CN12) Specifications 3-25
3-1-14 Encoder Connector (CN2) Specifications 3-26
3-1-15 EtherCAT Communications Connector (RJ45) Specifications 3-26
3-1-16 USB Connector (CN7) Specifications 3-27
3-1-17 Power ON Sequence 3-27
3-1-18 Overload Characteristics (Electronic Thermal Function) 3-28

3-2 Servomotor Specifications 3-31
3-2-1 General Specifications 3-31
3-2-2 Encoder Specifications 3-32
3-2-3 Characteristics 3-33

3-3 Decelerator Specifications 3-44

3-4 Cable and Connector Specifications 3-47
3-4-1 Integrated Cable Specifications 3-47
3-4-2 Combination of Integrated Cable and Extension Cable 3-67
3-4-3 Resistance to Bending of Integrated Cable 3-68
3-4-4 EtherCAT Communications Cable Specifications 3-69

3-5 Specifications of External Regeneration Resistors and External Regeneration Resistance Units 3-72
3-5-1 General Specifications 3-72

3-5-2 Characteristics 3-72
3-5-3 External Regeneration Resistance Unit Specifications 3-74

3-6 Reactor Specifications 3-75
3-6-1 General Specifications 3-75
3-6-2 Characteristics 3-75
3-6-3 Terminal Block Specifications 3-76

3-7 Noise Filter Specifications 3-77
3-7-1 General Specifications 3-77
3-7-2 Characteristics 3-79
3-7-3 Terminal Block Specifications 3-80

Section 4 Configuration and Wiring

4-1 Installation Conditions 4-2
4-1-1 Servo Drive Installation Conditions 4-2
4-1-2 Servomotor Installation Conditions 4-5
4-1-3 Decelerator Installation Conditions 4-9
4-1-4 External Regeneration Resistor and External Regeneration Resistance Unit Conditions 4-13
4-1-5 Noise Filter Installation Conditions 4-13

4-2 Wiring 4-15
4-2-1 Peripheral Equipment Connection Examples 4-16
4-2-2 Procedure for Wiring Connector-type Terminal Blocks and for Mounting a Shield Clamp 4-26
4-2-3 Procedure for Attaching an Integrated Connector 4-29
4-2-4 Procedure for Change of Cable Outlet Direction for Integrated Cable 4-31

4-3 Wiring Conforming to EMC Directives 4-33
4-3-1 Peripheral Equipment Connection Examples 4-34
4-3-2 Selecting Connection Component 4-38

4-4 Regenerative Energy Absorption 4-43
4-4-1 Calculating the Regenerative Energy 4-43
4-4-2 Servo Drive Regeneration Absorption Capacity 4-46
4-4-3 Regenerative Energy Absorption by an External Regeneration Resistance Device 4-47
4-4-4 Connecting an External Regeneration Resistor 4-48

4-5 Adjustment for Large Load Inertia 4-49

4-6 Machine Accuracy for Servomotor 4-50

4-7 Noise Filter Installation Conditions When the Total Wire Length Is Long 4-51
4-7-1 Noise Filters for Integrated Cables That Are Longer Than 20 Meters 4-51
4-7-2 Noise Filter to Connect to More Than One Servo Drive 4-51

Section 5 EtherCAT Communications

5-1 Display Area and Settings 5-2
5-1-1 Node Address Setting 5-2
5-1-2 Status Indicators 5-3

5-2 Structure of the CAN Application Protocol over EtherCAT 5-5

5-3 EtherCAT State Machine 5-6

5-4 Process Data Objects (PDOs) 5-7
5-4-1 PDO Mapping Settings 5-7
5-4-2 Sync Manager PDO Assignment Settings 5-8
5-4-3 Fixed PDO Mapping 5-8
5-4-4 Variable PDO Mapping 5-11
5-4-5 Safety PDO Mapping 5-12
5-4-6 Sync Manager PDO Mapping Assignment Settings 5-14

5-5 Service Data Objects (SDOs) 5-15

5-6 Synchronization Mode and Communications Cycle 5-16

5-6-1 Distributed Clock (DC) Mode 5-16
5-6-2 Free-Run Mode 5-16

5-7 Emergency Messages 5-17

5-8 Sysmac Device Features 5-18

5-9 Cable Redundancy Function 5-22
5-9-1 Objects Requiring Settings 5-22
5-9-2 Description of Operation 5-22
5-9-3 Procedure of Checking Operation 5-23
5-9-4 Slave Communications Statuses When Cable Redundancy Function Is Used 5-25
5-9-5 Relation between the Network Configuration Information and the Actual Configuration 5-26

Section 6 Basic Control Functions

6-1 Outline of Control Functions 6-2
6-1-1 Basic Control and Control Methods 6-2
6-1-2 Control Method 6-3

6-2 Control Blocks 6-5
6-2-1 Block Diagram for Position Control 6-5
6-2-2 Block Diagram for Velocity Control 6-7
6-2-3 Block Diagram for Torque Control 6-9

6-3 Cyclic Synchronous Position Mode 6-10

6-4 Cyclic Synchronous Velocity Mode 6-12

6-5 Cyclic Synchronous Torque Mode 6-14

6-6 Profile Position Mode 6-16

6-7 Profile Velocity Mode 6-21

6-8 Homing Mode 6-24

6-9 Connecting with OMRON Controllers 6-25

Section 7 Applied Functions

7-1 General-purpose Input Signals 7-3
7-1-1 Objects Requiring Settings 7-4
7-1-2 Default Setting 7-6
7-1-3 Function Input Details 7-7

7-2 General-purpose Output Signals 7-8
7-2-1 Objects Requiring Settings 7-8
7-2-2 Default Setting 7-10
7-2-3 Function Output Details 7-11

7-3 Drive Prohibition Functions 7-15
7-3-1 Objects Requiring Settings 7-15
7-3-2 Description of Operation 7-16

7-4 Software Position Limit Functions 7-17
7-4-1 Operating Conditions 7-17
7-4-2 Objects Requiring Settings 7-17
7-4-3 Description of Operation 7-18

7-5 Backlash Compensation 7-20
7-5-1 Operating Conditions 7-20
7-5-2 Objects Requiring Settings 7-20
7-5-3 Description of Operation 7-21

7-6 Brake Interlock 7-22
7-6-1 Objects Requiring Settings 7-22
7-6-2 Description of Operation 7-24
7-6-3 Operation Timing 7-25

7-7 Electronic Gear Function 7-29
7-7-1 Objects Requiring Settings 7-29
7-7-2 Operation Example 7-29

7-8 Torque Limit Switching 7-30
7-8-1 Operating Conditions 7-30
7-8-2 Objects Requiring Settings 7-30
7-8-3 Torque Limit Switching Method 7-31

7-9 Soft Start 7-32
7-9-1 Objects Requiring Settings 7-32
7-9-2 Soft Start Acceleration/Deceleration Time 7-32
7-9-3 Velocity Command First-order Lag Filter 7-33

7-10 Gain Switching Function 7-34
7-10-1 Objects Requiring Settings 7-34
7-10-2 Mode Selection 7-36
7-10-3 Gain Switching in Position Control 7-37

7-11 Touch Probe Function (Latch Function) 7-38
7-11-1 Related Objects 7-38
7-11-2 Trigger Signal Settings 7-40
7-11-3 Operation Sequence 7-41

7-12 Encoder Dividing Pulse Output Function 7-42
7-12-1 Objects Requiring Settings 7-43
7-12-2 Dividing Ratio 7-43
7-12-3 Output Reverse Selection 7-44
7-12-4 Z-phase Output 7-44

7-13 Dynamic Brake 7-45
7-13-1 Operating Conditions 7-45
7-13-2 Objects Requiring Settings 7-45
7-13-3 Description of Operation 7-46

7-14 Command Compensation Function for Communications Error 7-49
7-14-1 Operating Conditions 7-49
7-14-2 Operation Example 7-49

Section 8 Safety Function

8-1 Outline of Safety Functions 8-3
8-1-1 Description of Safety Functions 8-3
8-1-2 Configuration for Safety System 8-4
8-1-3 Network Connection and Settings 8-7
8-1-4 Operating Procedure for Safety Function 8-8
8-1-5 Safety Reaction Time for Safety Distance 8-11
8-1-6 Data Necessary for Designing Programs of Each Controller 8-12
8-1-7 PFH 8-15
8-1-8 Position/Velocity Data Monitored by Safety Functions 8-16
8-1-9 Precaution on Use 8-19
8-1-10 Procedure for Reset of Safety Error 8-20
8-1-11 Safety Program 8-21

8-2 Safe Torque OFF (STO) Function 8-22
8-2-1 STO Function via Safety Input Signals 8-23
8-2-2 STO Function via EtherCAT Communications 8-32
8-2-3 STO with SBC Functions via EtherCAT Communications 8-36

8-3 Safe Stop 1 (SS1) Function 8-39
8-3-1 Objects Requiring Settings 8-41
8-3-2 Operation Procedure 8-43
8-3-3 Operation Timing 8-44
8-3-4 Example of Safety Program 8-47
8-3-5 Concurrent Use of SS1 Function and SBC Function 8-48

8-4 Safe Stop 2 (SS2) Function 8-54

8-4-1 Objects Requiring Settings ... 8-55
8-4-2 Operation Procedure ... 8-57
8-4-3 Operation Timing ... 8-58
8-4-4 Example of Safety Program ... 8-61

8-5 Safe Operating Stop (SOS) Function ... 8-62
8-5-1 Objects Requiring Settings ... 8-62
8-5-2 Operation Procedure ... 8-63
8-5-3 Operation Timing ... 8-64
8-5-4 Example of Safety Program ... 8-67

8-6 Safely-limited Speed (SLS) Function ... 8-68
8-6-1 Objects Requiring Settings ... 8-70
8-6-2 Operation Procedure ... 8-72
8-6-3 Operation Timing ... 8-73
8-6-4 Example of Safety Program ... 8-78

8-7 Safely-limited Position (SLP) Function ... 8-79
8-7-1 Configuration Example for SLP System ... 8-79
8-7-2 Objects Requiring Settings ... 8-81
8-7-3 Operation Procedure ... 8-84
8-7-4 Operation Timing ... 8-85
8-7-5 Example of Safety Program ... 8-88
8-7-6 Setting of Safety Origin Position ... 8-89

8-8 Safe Direction (SDI) Function ... 8-102
8-8-1 Objects Requiring Settings ... 8-102
8-8-2 Operation Procedure ... 8-103
8-8-3 Operation Timing ... 8-104
8-8-4 Example of Safety Program ... 8-110

8-9 Safe Brake Control (SBC) Function ... 8-112
8-9-1 Configuration Method for SBC ... 8-113
8-9-2 Objects Requiring Settings ... 8-115
8-9-3 Operation Procedure ... 8-116
8-9-4 Connection Method ... 8-117
8-9-5 Connection Examples ... 8-119
8-9-6 Operation Timing ... 8-120
8-9-7 SBC Power Monitor ... 8-120
8-9-8 Safety Relay Stuck Error Detection ... 8-122

8-10 Safety Position/Velocity Validation Monitoring Function ... 8-124
8-10-1 Details about Validation Monitoring ... 8-124
8-10-2 Objects Requiring Settings ... 8-125
8-10-3 Operation Procedure ... 8-125
8-10-4 Operation Timing ... 8-126

Section 9 Details on Servo Parameters

9-1 Object Description Format ... 9-5

9-2 Common Control Objects ... 9-7
9-2-1 3000 hex: Basic Functions ... 9-7
9-2-2 3001 hex: Machine ... 9-13
9-2-3 3002 hex: Optimized Parameters ... 9-14
9-2-4 3010 hex: Position Command ... 9-16
9-2-5 3011 hex: Position Command Filter ... 9-18
9-2-6 3012 hex: Damping Control ... 9-19
9-2-7 3013 hex: Damping Filter 1 ... 9-20
9-2-8 3014 hex: Damping Filter 2 ... 9-21
9-2-9 3020 hex: Velocity Command ... 9-23
9-2-10 3021 hex: Velocity Command Filter ... 9-24
9-2-11 3030 hex: Torque Command ... 9-25
9-2-12 3031 hex: Velocity Limit in Torque Control ... 9-25
9-2-13 3040 hex: Profile Command ... 9-26
9-2-14 3041 hex: Command Dividing Function ... 9-27

9-3 Control Method Objects 9-29
9-3-1 3112 hex: ODF Velocity Feed-forward 9-29
9-3-2 3113 hex: ODF Torque Feed-forward 9-30
9-3-3 3120 hex: TDF Position Control 9-31
9-3-4 3121 hex: TDF Velocity Control 9-32

9-4 Control Loop Objects 9-34
9-4-1 3210 hex: Internal Position Command 9-34
9-4-2 3211 hex: Position Detection 9-35
9-4-3 3212 hex: Gain Switching in Position Control 9-35
9-4-4 3213 hex: 1st Position Control Gain 9-36
9-4-5 3214 hex: 2nd Position Control Gain 9-37
9-4-6 3220 hex: Internal Velocity Command 9-37
9-4-7 3221 hex: Velocity Detection 9-38
9-4-8 3222 hex: Gain Switching in Velocity Control 9-39
9-4-9 3223 hex: 1st Velocity Control Gain 9-39
9-4-10 3224 hex: 2nd Velocity Control Gain 9-40
9-4-11 3230 hex: Internal Torque Command 9-41
9-4-12 3231 hex: Torque Detection 9-41
9-4-13 3232 hex: Filter Switching in Torque Control 9-41
9-4-14 3233 hex: 1st Torque Command Filter 9-42
9-4-15 3234 hex: 2nd Torque Command Filter 9-43

9-5 Torque Output Setting Objects 9-44
9-5-1 3310 hex: Torque Compensation 9-44
9-5-2 3320 hex: Adaptive Notch Filter 9-46
9-5-3 3321 hex: 1st Notch Filter 9-47
9-5-4 3322 hex: 2nd Notch Filter 9-49
9-5-5 3323 hex: 3rd Notch Filter 9-51
9-5-6 3324 hex: 4th Notch Filter 9-53
9-5-7 3330 hex: Torque Limit 9-55

9-6 Homing Objects 9-57

9-7 Applied Function Objects 9-61
9-7-1 3B10 hex: Drive Prohibition 9-61
9-7-2 3B11 hex: Software Position Limit 9-62
9-7-3 3B20 hex: Stop Selection 9-64
9-7-4 3B21 hex: Deceleration Stop 9-66
9-7-5 3B30 hex: Touch Probe 1 9-67
9-7-6 3B31 hex: Touch Probe 2 9-70
9-7-7 3B40 hex: Zone Notification 1 9-71
9-7-8 3B41 hex: Zone Notification 2 9-72
9-7-9 3B50 hex: Position Detection Function 9-73
9-7-10 3B51 hex: Positioning Completion Notification 9-73
9-7-11 3B52 hex: Positioning Completion Notification 2 9-74
9-7-12 3B60 hex: Speed Detection Function 9-75
9-7-13 3B70 hex: Vibration Detection 9-76
9-7-14 3B71 hex: Runaway Detection 9-77
9-7-15 3B80 hex: Load Characteristic Estimation 9-78

9-8 Error- and Warning-related Objects 9-81
9-8-1 4000 hex: Error Full Code 9-81
9-8-2 4020 hex: Warning Customization 9-82
9-8-3 4021 hex: Warning Output 1 Setting 9-84
9-8-4 4022 hex: Warning Output 2 Setting 9-85
9-8-5 4030 hex: Information Customization 9-86

9-9 Monitoring-related Objects 9-87
9-9-1 4110 hex: Monitor Data via PDO 9-87
9-9-2 4120 hex: EtherCAT Communications Error Count 9-88
9-9-3 4130 hex: Safety Status Monitor 9-88
9-9-4 4131 hex: Safety Command Monitor 1 9-92
9-9-5 4132 hex: Safety Command Monitor 2 9-93
9-9-6 4140 hex: Lifetime Information 9-94
9-9-7 4150 hex: Overload 9-96

9-10 Display-related Objects 9-98

9-11 Power Device-related Objects 9-99
9-11-1 4310 hex: Regeneration 9-99
9-11-2 4320 hex: Main Circuit Power Supply 9-100

9-12 External Device-related Objects 9-102

9-13 Encoder-related Objects 9-104

9-14 I/O-related Objects 9-107
9-14-1 4600 hex: I/O Monitor 9-107
9-14-2 4601 hex: Function Input 9-108
9-14-3 4602 hex: Function Output 9-110
9-14-4 4604 hex: Control Input Change Count 9-111
9-14-5 4605 hex: Control Output Change Count 9-112
9-14-6 4610 hex: Brake Interlock Output 9-113
9-14-7 4620 hex: Encoder Dividing Pulse Output 9-114

9-15 General-purpose Input Setting Objects 9-116
9-15-1 Setting 9-116
9-15-2 4630 hex: Positive Drive Prohibition Input 9-117
9-15-3 4631 hex: Negative Drive Prohibition Input 9-117
9-15-4 4632 hex: External Latch Input 1 9-117
9-15-5 4633 hex: External Latch Input 2 9-118
9-15-6 4634 hex: Home Proximity Input 9-118
9-15-7 4635 hex: Positive Torque Limit Input 9-118
9-15-8 4636 hex: Negative Torque Limit Input 9-119
9-15-9 4637 hex: Error Stop Input 9-119
9-15-10 4638 hex: Monitor Input 1 9-119
9-15-11 4639 hex: Monitor Input 2 9-120
9-15-12 463A hex: Monitor Input 3 9-120
9-15-13 463B hex: Monitor Input 4 9-120
9-15-14 463C hex: Monitor Input 5 9-121
9-15-15 463D hex: Monitor Input 6 9-121
9-15-16 463E hex: Monitor Input 7 9-121
9-15-17 463F hex: Monitor Input 8 9-122

9-16 General-purpose Output Setting Objects 9-123
9-16-1 Setting 9-123
9-16-2 4650 hex: Error Output 9-124
9-16-3 4651 hex: Servo Ready Output 9-124
9-16-4 4652 hex: Positioning Completion Output 1 9-124
9-16-5 4653 hex: Positioning Completion Output 2 9-125
9-16-6 4654 hex: Velocity Attainment Detection Output 9-125
9-16-7 4655 hex: Torque Limit Output 9-125
9-16-8 4656 hex: Zero Speed Detection Output 9-126
9-16-9 4657 hex: Velocity Conformity Output 9-126
9-16-10 4658 hex: Warning Output 1 9-126
9-16-11 4659 hex: Warning Output 2 9-127
9-16-12 465A hex: Velocity Limiting Output 9-127
9-16-13 465B hex: Error Clear Attribute Output 9-127
9-16-14 465C hex: Remote Output 1 9-128
9-16-15 465D hex: Remote Output 2 9-128
9-16-16 465E hex: Remote Output 3 9-128
9-16-17 465F hex: Zone Notification Output 1 9-129
9-16-18 4660 hex: Zone Notification Output 2 9-129
9-16-19 4661 hex: Position Command Status Output 9-129
9-16-20 4662 hex: Distribution Completed Output 9-130
9-16-21 4663 hex: External Brake Interlock Output 9-130

9-17 Safety Related Object 9-132
9-17-1 4F00 hex: Safety Origin Position Setting 9-132
9-17-2 4F01 hex: Safety Position/Velocity Validation Monitoring Function 9-134
9-17-3 4F02 hex: Discrepancy Distance Measurement 9-135
9-17-4 4F03 hex: Safety Motor Rotation Direction Selection 9-136
9-17-5 4F08 hex: Safety Relay Activate 9-137
9-17-6 4F09 hex: Safety Relay OFF Delay Time 1 9-137
9-17-7 4F0A hex: Safety Relay OFF Delay Time 2 9-137

9-17-8 4F16 hex: Error Detection Activate In SLS Deactivate 9-138
9-17-9 4F18 hex: Safety Present Pulse Position 9-138
9-17-10 4F19 hex: Safety Present Position 9-139
9-17-11 4F1A hex: Safety Present Motor Velocity 9-139
9-17-12 4F20 hex: Safety Function Disable Setting 9-140

Section 10 Operation

10-1 Operational Procedure 10-2

10-2 Preparing for Operation 10-3
10-2-1 Items to Check Before Turning ON the Power Supply 10-3
10-2-2 Turning ON the Power Supply 10-4
10-2-3 Checking the Displays 10-5
10-2-4 Absolute Encoder Setup 10-7
10-2-5 Setting Up an Absolute Encoder from the Sysmac Studio 10-7

10-3 Test Run 10-8
10-3-1 Preparations for Test Run 10-8
10-3-2 Test Run via USB Communications from the Sysmac Studio 10-9

10-4 Confirmation of Safety Functions 10-10
10-4-1 Preparation Before Confirmation of Safety Function 10-10
10-4-2 Confirmation of Safety Function 10-10

Section 11 Adjustment Functions

11-1 Outline of Adjustment Functions 11-3
11-1-1 Adjustment Methods 11-3
11-1-2 Adjustment Procedure 11-4

11-2 Easy Tuning 11-6
11-2-1 Objects That Are Set 11-6
11-2-2 Executing Easy Tuning 11-8

11-3 Advanced Tuning 11-9
11-3-1 Objects That Are Set 11-9
11-3-2 Executing Advanced Tuning 11-10

11-4 Manual Tuning 11-11
11-4-1 Objects That Are Set 11-11
11-4-2 Executing Manual Tuning 11-11

11-5 Data Trace 11-12

11-6 FFT 11-13

11-7 Damping Control 11-14
11-7-1 Objects Requiring Settings 11-14
11-7-2 Operating Procedure 11-16
11-7-3 Setting Frequency with Sysmac Studio 11-17

11-8 Load Characteristic Estimation 11-18
11-8-1 Objects Requiring Settings 11-19
11-8-2 Setting Load Characteristic Estimation Function 11-20

11-9 Adaptive Notch Filter 11-21
11-9-1 Objects Requiring Settings 11-21
11-9-2 Operating Procedure 11-22

11-10 Notch Filters 11-23
11-10-1 Objects Requiring Settings 11-24
11-10-2 Notch Filter Width and Depth 11-25

11-11 Friction Torque Compensation Function 11-26
11-11-1 Operating Conditions 11-26
11-11-2 Objects Requiring Settings 11-26

11-11-3 Operation Example 11-27

11-12 Feed-forward Function 11-29
11-12-1 Feed-forward Control in TDF Control 11-29
11-12-2 Feed-forward Control in ODF Control 11-31

Section 12 Troubleshooting

12-1 Actions for Problems 12-2
12-1-1 Preliminary Checks When a Problem Occurs 12-2
12-1-2 Precautions When a Problem Occurs 12-3
12-1-3 Replacing the Servomotor or Servo Drive 12-4

12-2 Warnings 12-6
12-2-1 Related Objects 12-6
12-2-2 Warning List 12-8

12-3 Errors 12-10
12-3-1 Error List 12-10
12-3-2 Deceleration Stop Operation at Errors 12-13

12-4 Information 12-14
12-4-1 Related Objects 12-14
12-4-2 Information List 12-14

12-5 Troubleshooting 12-15
12-5-1 Troubleshooting Using Error Displays 12-16
12-5-2 Troubleshooting Using AL Status Codes 12-41
12-5-3 Troubleshooting Using the Operation State 12-45

Section 13 Maintenance and Inspection

13-1 Periodic Maintenance 13-2

13-2 Servo Drive Lifetime 13-3

13-3 Servomotor Lifetime 13-4

13-4 Method for Ring Disconnection Maintenance and Inspection 13-5

Appendices

A-1 CiA 402 Drive Profile A-2
A-1-1 Controlling the State Machine of the Servo Drive A-2
A-1-2 Modes of Operation A-4
A-1-3 Modes of Operation and Applied/Adjustment Functions A-5
A-1-4 Changing the Mode of Operation A-5
A-1-5 Homing Mode Specifications A-7

A-2 CoE Objects A-12
A-2-1 Object Dictionary Area A-12
A-2-2 Data Type A-12
A-2-3 Object Description Format A-13
A-2-4 Communication Objects A-14
A-2-5 PDO Mapping Objects A-19
A-2-6 Sync Manager Communication Objects A-34
A-2-7 Manufacturer Specific Objects A-38
A-2-8 Servo Drive Profile Object A-41
A-2-9 Safety Function Objects A-61

A-3 Object List A-77

A-4 Sysmac Error Status Codes A-116
A-4-1 Error List A-116
A-4-2 Error Descriptions A-132

A-5 Use Case of Safety Function A-207
A-5-1 Function to Stop Servomotor A-207
A-5-2 Monitoring Function A-218
A-5-3 Function block for 1S-series Servo Drives Advance Type A-229
A-6 Response Time in EtherCAT Process Data Communications A-238
A-6-1 Input Response Time A-238
A-6-2 Output Response Time A-238
A-7 Version Information A-239
A-7-1 Relationship between Unit Versions and Sysmac Studio Versions A-239

Index

Terms and Conditions Agreement

Warranty, Limitations of Liability

Warranties

- **Exclusive Warranty**

  Omron's exclusive warranty is that the Products will be free from defects in materials and workmanship for a period of twelve months from the date of sale by Omron (or such other period expressed in writing by Omron). Omron disclaims all other warranties, express or implied.

- **Limitations**

  OMRON MAKES NO WARRANTY OR REPRESENTATION, EXPRESS OR IMPLIED, ABOUT NON-INFRINGEMENT, MERCHANTABILITY OR FITNESS FOR A PARTICULAR PURPOSE OF THE PRODUCTS. BUYER ACKNOWLEDGES THAT IT ALONE HAS DETERMINED THAT THE PRODUCTS WILL SUITABLY MEET THE REQUIREMENTS OF THEIR INTENDED USE.

  Omron further disclaims all warranties and responsibility of any type for claims or expenses based on infringement by the Products or otherwise of any intellectual property right.

- **Buyer Remedy**

  Omron's sole obligation hereunder shall be, at Omron's election, to (i) replace (in the form originally shipped with Buyer responsible for labor charges for removal or replacement thereof) the non-complying Product, (ii) repair the non-complying Product, or (iii) repay or credit Buyer an amount equal to the purchase price of the non-complying Product; provided that in no event shall Omron be responsible for warranty, repair, indemnity or any other claims or expenses regarding the Products unless Omron's analysis confirms that the Products were properly handled, stored, installed and maintained and not subject to contamination, abuse, misuse or inappropriate modification. Return of any Products by Buyer must be approved in writing by Omron before shipment. Omron Companies shall not be liable for the suitability or unsuitability or the results from the use of Products in combination with any electrical or electronic components, circuits, system assemblies or any other materials or substances or environments. Any advice, recommendations or information given orally or in writing, are not to be construed as an amendment or addition to the above warranty.

See http://www.omron.com/global/ or contact your Omron representative for published information.

Limitation on Liability; Etc

OMRON COMPANIES SHALL NOT BE LIABLE FOR SPECIAL, INDIRECT, INCIDENTAL, OR CONSEQUENTIAL DAMAGES, LOSS OF PROFITS OR PRODUCTION OR COMMERCIAL LOSS IN ANY WAY CONNECTED WITH THE PRODUCTS, WHETHER SUCH CLAIM IS BASED IN CONTRACT, WARRANTY, NEGLIGENCE OR STRICT LIABILITY.

Further, in no event shall liability of Omron Companies exceed the individual price of the Product on which liability is asserted.

Application Considerations

Suitability of Use

Omron Companies shall not be responsible for conformity with any standards, codes or regulations which apply to the combination of the Product in the Buyer's application or use of the Product. At Buyer's request, Omron will provide applicable third party certification documents identifying ratings and limitations of use which apply to the Product. This information by itself is not sufficient for a complete determination of the suitability of the Product in combination with the end product, machine, system, or other application or use. Buyer shall be solely responsible for determining appropriateness of the particular Product with respect to Buyer's application, product or system. Buyer shall take application responsibility in all cases.

NEVER USE THE PRODUCT FOR AN APPLICATION INVOLVING SERIOUS RISK TO LIFE OR PROPERTY OR IN LARGE QUANTITIES WITHOUT ENSURING THAT THE SYSTEM AS A WHOLE HAS BEEN DESIGNED TO ADDRESS THE RISKS, AND THAT THE OMRON PRODUCT(S) IS PROPERLY RATED AND INSTALLED FOR THE INTENDED USE WITHIN THE OVERALL EQUIPMENT OR SYSTEM.

Programmable Products

Omron Companies shall not be responsible for the user's programming of a programmable Product, or any consequence thereof.

Disclaimers

Performance Data

Data presented in Omron Company websites, catalogs and other materials is provided as a guide for the user in determining suitability and does not constitute a warranty. It may represent the result of Omron's test conditions, and the user must correlate it to actual application requirements. Actual performance is subject to the Omron's Warranty and Limitations of Liability.

Change in Specifications

Product specifications and accessories may be changed at any time based on improvements and other reasons. It is our practice to change part numbers when published ratings or features are changed, or when significant construction changes are made. However, some specifications of the Product may be changed without any notice. When in doubt, special part numbers may be assigned to fix or establish key specifications for your application. Please consult with your Omron's representative at any time to confirm actual specifications of purchased Product.

Errors and Omissions

Information presented by Omron Companies has been checked and is believed to be accurate; however, no responsibility is assumed for clerical, typographical or proofreading errors or omissions.

Safety Precautions

- To ensure that the 1S-series Servomotor/Servo Drive Advance Type as well as peripheral equipment are used safely and correctly, be sure to read this *Safety Precautions* section and the main text before using the product. Learn all items you should know before use, regarding the equipment as well as the required safety information and precautions.
- Make an arrangement so that this User's Manual also gets to the end user of this product.
- After reading this User's Manual, keep it in a convenient place so that it can be referenced at any time.

Explanation of Displays

- The precautions indicated here provide important information for safety. Be sure to heed the information provided with the precautions.
- The following signal words are used to indicate and classify precautions in this User's Manual.

⚠ DANGER	Indicates an imminently hazardous situation which, if not avoided, is likely to result in serious injury or may result in death. Additionally there may be severe property damage.
⚠ WARNING	Indicates a potentially hazardous situation which, if not avoided, will result in minor or moderate injury, or may result in serious injury or death. Additionally there may be significant property damage.
⚠ Caution	Indicates a potentially hazardous situation which, if not avoided, may result in minor or moderate injury or in property damage.

Even those items denoted by the caution symbol may lead to a serious outcome depending on the situation. Accordingly, be sure to observe all safety precautions.

Explanation of Symbols

This User's Manual uses the following symbols.

	The circle and slash symbol indicates operations that you must not do. The specific operation is shown in the circle and explained in text. This example indicates prohibiting disassembly.
	The triangle symbol indicates precautions and warnings. The specific operation is shown in the triangle and explained in text. This example indicates a precaution for electric shock.
	The triangle symbol indicates precautions and warnings. The specific operation is shown in the triangle and explained in text. This example indicates a general precaution.
	The filled circle symbol indicates operations that you must do. The specific operation is shown in the circle and explained in text. This example indicates a requirement for the ground.

Precautionary Information

- Illustrations contained in this manual sometimes depict conditions without covers and safety shields for the purpose of showing the details. When you use this product, be sure to install the covers and shields as specified and use the product according to this manual.
- If the product has been stored for an extended period of time, contact your OMRON sales representative.

Handling of Safety Products

If the functions of safety products cannot attain their full potential, it will result in minor or moderate injury, or may result in serious injury or death. When building the system, observe the following warnings and optimize safety product selection for your equipment and devices to ensure the integrity of the safety-related components.

⚠ WARNING

● Setting Up a Risk Assessment System

The process of selecting these products should include the development and execution of a risk assessment system early in the design development stage to help identify potential dangers in your equipment and optimize safety product selection.

The following is an example of related international standards.

- ISO12100 General Principles for Design - Risk Assessment and Risk Reduction

● Protective Measure

When developing a safety system for the equipment and devices that use safety products, make every effort to understand and conform to the entire series of international and industry standards available, such as the examples given below.

The following are examples of related international standards.

- ISO12100 General Principles for Design - Risk Assessment and Risk Reduction
- IEC60204-1 Electrical Equipment of Machines - Part 1: General Requirements
- ISO13849-1, -2 Safety-related Parts of Control Systems
- ISO14119 Interlocking Devices Associated with Guards - Principles for Design and Selection
- IEC/TS 62046 Application of Protective Equipment to Detect the Presence of Persons

● Role of Safety Products

Safety products incorporate standardized safety functions and mechanisms, but the benefits of these functions and mechanisms are designed to attain their full potential only within properly designed safety-related systems. Make sure you fully understand all functions and mechanisms, and use that understanding to develop systems that will ensure optimal usage.

The following are examples of related international standards.

- ISO14119 Interlocking Devices Associated with Guards - Principles for Design and Selection
- ISO13857 Safety Distances to Prevent Hazard Zones being Reached by Upper and Lower Limbs

● Installing Safety Products

Qualified engineers must develop your safety-related system and install safety products in devices and equipment. Prior to machine commissioning, verify through testing that the safety products work as expected.

The following are examples of related international standards.

- ISO12100 General Principles for Design - Risk Assessment and Risk Reduction
- IEC60204-1 Electrical Equipment of Machines - Part 1: General Requirements
- ISO13849-1, -2 Safety-related Parts of Control Systems
- ISO14119 Interlocking Devices Associated with Guards - Principles for Design and Selection

● Observing Laws and Regulations

Safety products must conform to pertinent laws, regulations, and standards. Make sure that they are installed and used in accordance with the laws, regulations, and standards of the country where the devices and equipment incorporating these products are distributed.

● Observing Usage Precautions

Carefully read the specifications and precautions as well as all items in the Instruction Manual for your safety product to learn appropriate usage procedures. Any deviation from instructions will lead to unexpected device or equipment failure not anticipated by the safety-related system.

● Transferring Devices and Equipment

When you transfer devices and equipment, be sure to retain one copy of the Instruction Manual for safety devices and the User's Manual, and supply another copy with the device or equipment so the person receiving it will have no problems with operation and maintenance.

The following are examples of related international standards.

- ISO12100 General Principles for Design - Risk Assessment and Risk Reduction
- IEC60204-1 Electrical Equipment of Machines - Part 1: General Requirements
- ISO13849-1, -2 Safety-related Parts of Control Systems
- IEC62061 Functional Safety of Safety-related Electrical, Electronic and Programmable Electronic Control Systems
- IEC61508 Functional Safety of Electrical/Electronic/Programmable Electronic Safety-related Systems

Transporting and Unpacking

⚠ WARNING

Do not damage, pull, or put excessive stress or heavy objects on the cables.

Doing so may cause electric shock, malfunction, or burning.

Installation, Wiring and Maintenance

WARNING

Install the Servo Drive, Servomotor, and peripheral equipment before wiring.

Not doing so may cause electric shock.

Be sure to ground the 200-VAC input model Servo Drive and Servomotor to 100 Ω or less, and the 400-VAC input model to 10 Ω or less.

Not doing so may cause electric shock.

Do not remove the front cover, terminal covers, cables, or peripheral equipment while the power is supplied.

Doing so may cause electric shock.

Before carrying out wiring or inspection, turn OFF the main circuit power and wait for at least the following specific time.

Not doing so may cause electric shock or burning.

10 minutes: R88D-1SAN10F-ECT, R88D-1SAN15F-ECT, R88D-1SAN20F-ECT, R88D-1SAN30F-ECT

20 minutes: R88D-1SAN02H-ECT, R88D-1SAN04H-ECT, R88D-1SAN08H-ECT, R88D-1SAN10H-ECT, R88D-1SAN15H-ECT, R88D-1SAN20H-ECT, R88D-1SAN30H-ECT

Do not damage, pull, or put excessive stress or heavy objects on the cables.

Doing so may cause electric shock, malfunction, or burning.

Use appropriate tools to wire terminals and connectors. Check that there is no short-circuit before use.

Not doing so may cause electric shock.

Connect the frame ground wire in the integrated cable securely to ⏚ or FG of the Servo Drive.

Not doing so may cause electric shock.

Provide safety measures, such as a fuse, to protect against short circuiting of external wiring and failure of the Servo Drive.

Not doing so may cause a fire.

Install the Servomotor, Servo Drive, and peripheral equipment on non-flammable materials such as metals.

Not doing so may cause a fire.

Keep conductive or flammable foreign objects such as screws, metal pieces, and oil out of the Servo Drive and connectors. The connector is set on the top of the Servo Drive. Pay attention to mentioned earlier.

Not doing so may cause a fire or electric shock.

Design the configuration to cut off the main circuit power supply when the ERR signal (normally close contact) of the control output function is output (open).

Not doing so may cause a fire.

Do not bundle the integrated cables.

Not doing so may cause fire.

Lock the integrated cable and extension cable connectors.

Not doing so may cause fire.

When you connect more than one Servo Drive to one noise filter, ensure that the size of wires used for the input side of the noise filter and the size of wires used between the noise filter and the relay terminal blocks are thick enough to pass at least the rated current of the noise filter.

Not doing so may cause a fire or electric shock.

Operation Check

WARNING

Use the Servomotor, Servo Drive and integrated cable in a specified combination.

Not doing so may cause fire or equipment damage.

Usage

WARNING

Do not enter the operating area during operation.

Doing so may cause injury.

Do not touch the Servo Drive radiator, Regeneration Resistor, or Servomotor while the power is supplied or for a while after the power is turned OFF because they get hot.

Doing so may cause fire or a burn injury.

Take appropriate measures to ensure that the specified power with the rated voltage is supplied. Be particularly careful in locations where the power supply is unstable.

Not doing so may cause failure.

When the power is restored after a momentary power interruption, the machine may restart suddenly. Do not come close to the machine when restoring power.

Implement measures to ensure safety of people nearby even when the machine is restarted.

Doing so may cause injury.

Use appropriate tools to wire terminals and connectors. Check that there is no short-circuit before use.

Not doing so may cause electric shock.

Be sure to observe the radiator plate installation conditions that are specified in the manual.

Not doing so may cause the Servo Drive or Servomotor to burn.

If the load that exceeds the allowable range is installed, it may cause the dynamic brake to be damaged. Be sure to use the appropriate load. For the selection of the appropriate load, refer to *4-5 Adjustment for Large Load Inertia* on page 4-49.

Not doing so may cause the Servo Drive to be damaged.

The dynamic brake is intended for the stop at the time of an error and therefore it has a short-time rating. If the dynamic brake is activated, provide an interval of 3 minutes or more before the next activation to prevent a circuit failure and burning of the Dynamic Brake Resistor.	
Make a design of equipment with consideration of a distance until a Servomotor stops while safety monitoring functions are used. Not doing so may cause injury and equipment damage.	
Do not place flammable materials near the Servomotor, Servo Drive, or peripheral equipment. Not doing so may cause a fire.	
If the Servo Drive fails, cut off the power supply to the Servo Drive at the power supply. Not doing so may cause a fire.	
Use an appropriate External Regeneration Resistor. Install an external protective device such as temperature sensor to ensure safety when using the External Regeneration Resistor. Not doing so run the risk of burnout.	
Use the extension cables in a specified combination. Not doing so may cause fire or equipment damage.	
Before operating the Servo Drive in an actual environment, check if it operates correctly based on the newly set parameters. Not doing so may cause equipment damage.	
When constructing a system that includes safety functions, be sure you understand the relevant safety standards and all related information in user documentation, and design the system to comply with the standards. Not doing so may cause injury or equipment damage.	
An External Regeneration Resistor or an External Regeneration Resistor Unit may become hot. In order to ensure safety, install an external protection such as a guard so as not to touch them easily. Not doing so may cause a burn injury.	

Transporting and Unpacking

Caution

When transporting the Servo Drive, do not hold it by the cables, shield clamp, integrated connector or motor shaft.

Injury or failure may result.

Do not step on the Servo Drive or place heavy articles on it.

Injury or failure may result.

Do not overload the product.

Injury or failure may result.

Be sure to observe the specified amount when piling up products.

Injury or failure may result.

The allowable number of piled-up products Servo Drive, Servomotor, Reactor:

Follow the instructions on the individual package.

External Regeneration Resistor: 12

External Regeneration Resistance Unit: 4

Noise Filter: 15

Wiring

Caution

Be careful about sharp parts such as the corner of the equipment when handling the Servo Drive and Servomotor.

Injury may result.

Wire the cables correctly and securely.

Damage to Servo Drive or fire may result.

Precautions for Safe Use

General Precaution

- Do not store or install the Servo Drive in the following locations. Doing so may result in electric shock, fire, equipment damage, or malfunction.

  Locations subject to direct sunlight

  Locations subject to temperatures outside the range specified in the specifications

  Locations subject to humidity outside the range specified in the specifications

  Locations subject to condensation as the result of severe changes in temperature

  Locations subject to corrosive or flammable gases

  Locations subject to dust (especially iron dust) or salts

  Locations subject to exposure to water, oil, or chemicals

  Locations subject to shock or vibration

- Medical electronics such as cardiac pacemakers may malfunction or injury may result.
- If an error occurs, remove the cause of the error and ensure safety, and then perform the error reset and restart the operation. Injury, equipment damage, or burning may result.

Mounting

- Be sure to observe the installation conditions. Burning or failure may result.

Wiring

- Use a robot cable for the wiring to separately install the Servo Drive and Servomotor to moving and fixed parts of the equipment. Equipment damage may result.
- Connect the Servo Drive to the Servomotor without a contactor, etc. Malfunction or equipment damage may result.
- Wire the cables correctly and securely. Runaway motor, Unintentional behavior of the brake, injury, or failure may result.
- Take appropriate and sufficient countermeasures to provide shielding when installing systems in the following locations. Failure may result.

  Locations subject to static electricity or other forms of noise

  Locations subject to strong electromagnetic fields

  Locations subject to possible exposure to radioactivity

  Locations close to power lines
- Do not move a integrated connector of a Servomotor over 5 times. Electric shock, equipment damage, or burning may result.
- Pay attention carefully to fingers where the levers of connectors are locked. Pinched fingers may result.

Precautions for Correct Use

General Precaution

- When unpacking, transporting, or installing the products, observe the following instructions. Injury or failure may result.
  a) When lifting the products, do not drop the products.
  b) Do not grasp a plastic part of the product.
  c) When lifting a Servomotor, always lift the product by grasping a metal part other than the shaft or integrated connector.
  d) When lifting the products at 20 kg or more, always have two people lift the products.
  Relevant model: R88M-1AM2K715T-B□, R88M-1AM3K015C-B□

Transporting and Unpacking

- Check that the eye bolts are not loose after replacing them.
  If they are loose, the screws can come off and the Servomotor may fall during the transportation by the use of eye bolts. Do not put the human body under the Servomotor during the transportation.

Installation

- Be sure to observe the mounting direction. Failure may result.
- Provide the specified clearance between the Servo Drive and the inner surface of the control panel or other equipment. Fire or failure may result.
- Do not apply strong impact on the motor shaft, integrated connector or Servo Drive. Failure may result.
- Do not touch the key grooves with bare hands if the Servomotor with shaft-end key grooves is used. Injury may result.
- Use non-magnetic mounting screws. Note also that the depth of any mounted screw does not reach the effective thread length. Equipment damage may result.
- Be sure to observe the allowable axial load for the Servomotor. Equipment damage may result.
- Install equipment to prevent crash and reduce shock.
  Do not run the Servomotor outside the operable range by the use of the drive prohibition function such as overtravel. Crash against the stroke edge may occur depending on stopping distance and equipment damage may result.
- Do not block the intake or exhaust openings. Do not allow foreign objects to enter the Servo Drive. Fire may result.

Wiring

- Tighten the mounting screws, terminal block screws, and shield clamp screws for the Servo Drive and Servomotor to the specified torque. Failure may result.
- Use crimp terminals to wire screw type terminal blocks. Do not connect bare stranded wires directly to terminals blocks. Fire may result.
- Always use the power supply voltage specified in this document. Burning may result.
- Do not apply a commercial power supply directly to the Servomotor. Fire or failure may result.
- Disconnect all connections to the Servo Drive and Servomotor before attempting a megger test (insulation resistance measurement) on the Servo Drive or Servomotor. Not doing so may result in Servo Drive or Servomotor failure. Do not perform a dielectric strength test on the Servo Drive or Servomotor. Doing so may result in damage of the internal elements.
- Carefully perform the wiring and assembling. Injury may result.
- Wear the protective equipment when installing or removing the main circuit connector, main circuit connector A, main circuit connector B, control power supply connector, or motor connector. Do not apply a force after the protrusion of the connector opener reaches the bottom dead center. (As a guide, do not apply a force of 100 N or more.)
- Do not block the intake or exhaust openings. Do not allow foreign objects to enter the Servo Drive. Fire may result.
- Be sure to install surge suppressors when you connect a load with an induction coil such as a relay to the control output terminal. Malfunction or equipment damage may result.
- Do not give impact on connectors such as tapping by hammer. Damage may result.
- Be sure to install a shield clamp in accordance with a specified procedure. Electric shock may result.

Adjustment

- Install an immediate stop device externally to the machine so that the operation can be stopped and the power supply is cut off immediately. Injury may result.
- Do not adjust or set parameters to extreme values, because it will make the operation unstable. Injury may result.
- Secure a sufficient rigidity when you install a servo motor into equipment. Equipment damage or malfunction may result.

- If a problem occurs in serial communications or the computer during a test operation, you have no means to stop the Servomotor.
  Connect an externally installed emergency stop switch, etc. to the Error Stop Input of the general-purpose input so that the Servomotor can be stopped without fail.
- When using the Servomotor with key, run the Servomotor in a state in which the key cannot jump out of the shaft.
  Not doing so may result in hurting people around the equipment due to the jumping key.

Operation Check

- Fully check the shaft when you reset a brake interlock from PC tool.
- Do not drive the Servomotor by the use of an external drive source. Fire may result.

Usage

- Tighten the mounting screws, terminal block screws, and setting screws of a bracket of a shield clamp for the Servo Drive, Servomotor, and peripheral equipment at the specified torque. Failure may result.
- Install a stopping device on the machine to ensure safety.
  The holding brake is not a stopping device to ensure safety. Injury may result.
- Install an immediate stop device externally to the machine so that the operation can be stopped and the power supply is cut off immediately. Injury may result.
- Conduct a test operation after confirming that the equipment is not affected. Equipment damage may result.
- Do not use the built-in brake of the Servomotor for normal braking operation. Failure may result.
- After an earthquake, be sure to conduct safety checks. Electric shock, injury, or fire may result.
- Connect an emergency stop (immediate stop) relay in series with the brake interlock output. Injury or failure may result.
- Do not use the cable when it is laying in oil or water. Electric shock, injury, or fire may result.
- Install safety devices to prevent idling or locking of the electromagnetic brake or the gear head, or leakage of grease from the gear head. Injury, damage, or taint damage result.
- Be sure to turn OFF the power supply when not using the Servo Drive for a prolonged period of time. Not doing so may result in injury or malfunction.
- If the Servomotor is not controlled, it may not be possible to maintain the stop. To ensure safety, install a stop device. Equipment damage or injury may result.
- Periodically run the Servomotor approximately one rotation when the oscillation operation continues at a small angle of 45° or smaller. Servomotor failure may result.
- When a difference between a position indicated by the Servo Drive before the power supply OFF and a position after the power supply ON is one rotation or more, check that devices are placed in appropriate areas.
- Immediately stop the operation and cut off the power supply when unusual smell, noise, smoking, abnormal heat generation, or vibration occurs. Not doing so may result in Servo Drive or Servomotor damage or burning.

Maintenance

- After replacing the Servo Drive, transfer to the new Servo Drive all data needed to resume operation, before restarting operation. Equipment damage may result.
- Do not repair the Servo Drive by disassembling it. Electric shock or injury may result.

Location of Warning Display

The Servo Drive bears a warning label at the following location to provide handling warnings.

When you handle the Servo Drive, be sure to observe the instructions provided on this label.

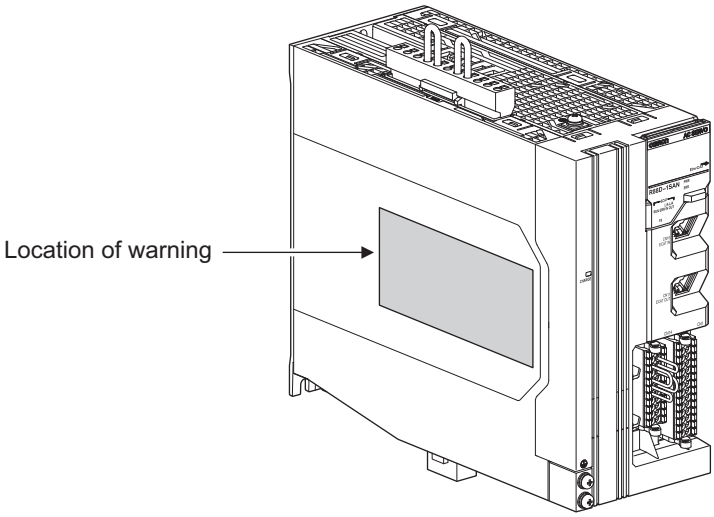

Instructions on Warning Display

	警告	WARNING	警告	AVERTISSEMENT
	使用、設置、保守前に必ず取扱説明書を読み、指示に従うこと	Read the manual and follow the instruction before setting up.	在使用、安装、维护之前，请务必按照使用说明书的指示操作	Lire le manuel et suivre les instructions avant la mise en service.
	放電時間は15分です。電源を切った後,15分間は触らないこと！感電の恐れあり！	Discharge time is 15min. After turn off power, wait 15min before service. Risk of electric shock.	电容放电需15分钟。切断电源15分钟内请勿触摸。有触电的危险!	Le temps de décharge est de 15 min. Après avoir coupé l'alimentation, attendez 15 min avant la mise en service. Risque de choc électrique.
	必ずアースに配線すること！感電の恐れあり	Connect ground! Risk of electric shock.	务必安装接地线！以防触电	Connecter la mise à la terre! Risque de choc electrique
	ヒートシンクに触らないこと！やけどの恐れあり	Do not touch heatsink! Risk of burn.	请勿触摸散热器！以防灼伤	Ne pas toucher le dissipateur de chaleur! Risque de brûlure.
In Canada, transient surge suppression shall be installed on the line side of this equipment and shall be rated 277 V (phase to ground), suitable for overvoltage category III, and shall provide protection for a rated impulse withstand voltage peak of 6 kV.				

Note The above is an example of warning display.

Disposal

Comply with the local ordinance and regulations when disposing of the product.

Dispose of in accordance with WEEE Directive

Items to Check After Unpacking

After you unpack the product, check the following items.

- Is this the model you ordered?
- Was there any damage sustained during shipment?

Servo Drive

Nameplate of Servo Drive

The model, rating and lot number of the 1S-series Servo Drive are given on the product nameplate.

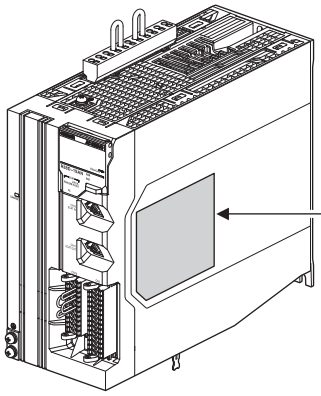

Name plate example: 200 VAC 1 kW Servo Drive

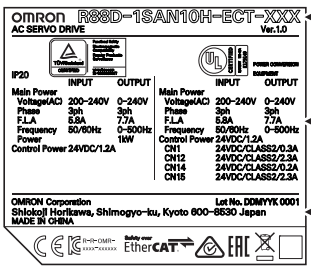

*1. The notifications and their meanings are explained below.
Notation: Lot No. DDMYY☐ xxxx
DDMYY: Lot number, ☐: For use by OMRON, xxxx: Serial number
DD gives the date.
“M” gives the month. (1 to 9: January to September, X: October, Y: November, Z: December)
YY gives the last two digits of the year.

Accessories of Servo Drive

This product comes with the following accessories.

- INSTRUCTION MANUAL × 1 copy
- Warning label × 1 sheet
- General Compliance Information and instructions for EU × 1 copy
- Attached connectors (Depends on the model. Refer to the following table.)

When UL/CSA certification is required, attach the warning label to a place around the Servo Drive.

Connectors, mounting screws, mounting brackets, and other accessories other than those in the table below are not supplied. They must be prepared by the customer.

If any item is missing or a problem is found such as Servo Drive damage, contact the OMRON dealer or sales office where you purchased your product.

Specifications		Control I/O connector (CN1)	Brake interlock connector (CN12)	Main circuit connector and main circuit connector A (CNA)
Single-phase/3-phase 200 VAC	200 W	Included	Included	Included*1 *3
	400 W			
	750 W			
	1.5 kW			Included*2 *3
3-phase 200 VAC	1 kW			Included*1 *3
	2 kW			Included*2 *3
	3 kW			
3-phase 400 VAC	1 kW			
	1.5 kW			
	2 kW			
	3 kW			

*1. The connector with 11 terminals is included. Two short-circuit wires are connected.

*2. The connector with 6 terminals is included. One short-circuit wire is connected.

*3. One opener is included.

Specifications		Main circuit connector B (CNB)	Motor connector (CNC)	Control power supply connector (CND)
Single-phase/3-phase 200 VAC	200 W	---	Included*2	---
	400 W			
	750 W			
	1.5 kW	Included*1	Included*3	Included*4
3-phase 200 VAC	1 kW	---	Included*2	---
	2 kW	Included*1	Included*3	Included*4
	3 kW			
3-phase 400 VAC	1 kW			
	1.5 kW			
	2 kW			
	3 kW			

*1. One short-circuit wire is connected to the connector.

*2. The connector with 3 terminals is included.

*3. The connector with 4 terminals is included.

*4. One opener is included.

Specifications		Safety signal connector (CN14)	Safe brake control connector (CN15)
Single-phase/3-phase 200 VAC	200 W	Included*1	Included
	400 W		
	750 W		
	1.5 kW		
3-phase 200 VAC	1 kW		
	2 kW		
	3 kW		
3-phase 400 VAC	1 kW		
	1.5 kW		
	2 kW		
	3 kW		

*1. Four short-circuit wires are connected to the connector. A pin to prevent improper wiring are included.

Servomotor

Nameplate of Servomotor

The model, rating and serial number of the 1S-series Servomotor are given on the product nameplate.

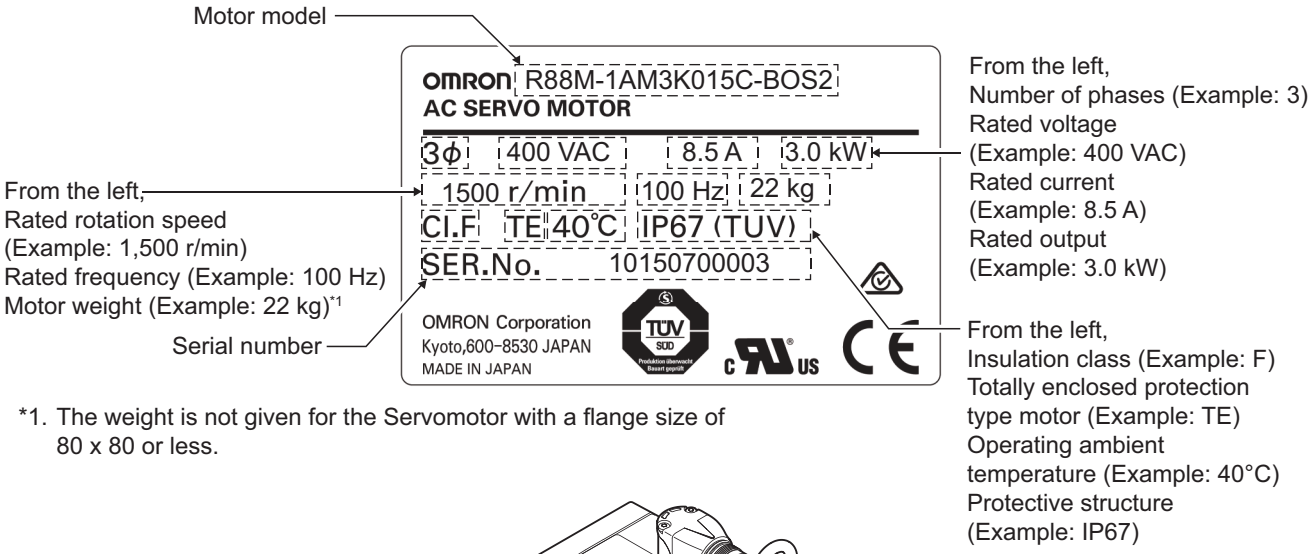

*1. The weight is not given for the Servomotor with a flange size of 80 x 80 or less.

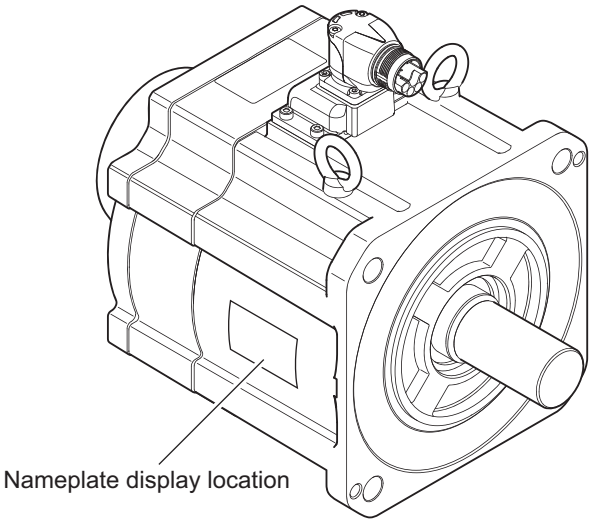

Accessories of Servomotor

This product comes with an instruction manual.

Decelerator (Backlash: 3 Arcminutes Max.)

For Decelerators (backlash: 3 arcminutes max.), the model number given on the nameplate does not match the model number of the Decelerator. Therefore, refer to the following table for correspondence between the model numbers on nameplates and Decelerators.

Example of nameplate: 200-W Decelerator (backlash: 3 arcminutes max., reduction ratio: 1/5) for 3,000-r/min Servomotors

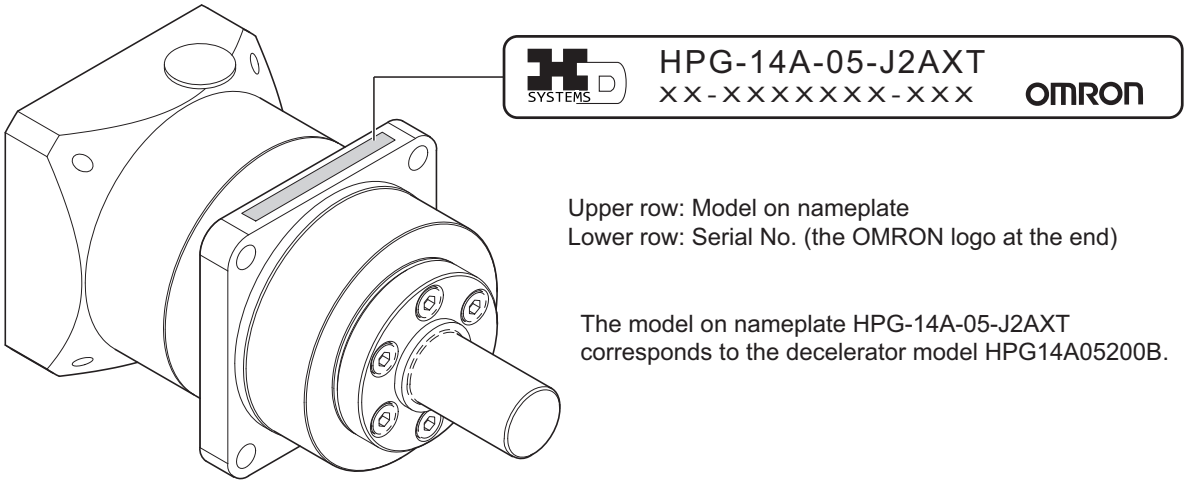

● Decelerator (backlash: 3 arcminutes max.) for 3,000-r/min Servomotors

Specifications		Without key		With key and tap	
Servo-motor rated output	Reduc-tion ratio	Decelerator model	Model on nameplate	Decelerator model	Model on nameplate
200 W	1/5	R88G-HPG14A05200B	HPG-14A-05-J2AXT	R88G-HPG14A05200BJ	HPG-14A-05-J6AXT
	1/11	R88G-HPG14A11200B	HPG-14A-11-J2AXU	R88G-HPG14A11200BJ	HPG-14A-11-J6AXU
	1/21	R88G-HPG20A21200B	HPG-20A-21-J2GDH	R88G-HPG20A21200BJ	HPG-20A-21-J6GDH
	1/33	R88G-HPG20A33200B	HPG-20A-33-J2GDI	R88G-HPG20A33200BJ	HPG-20A-33-J6GDI
	1/45	R88G-HPG20A45200B	HPG-20A-45-J2GDI	R88G-HPG20A45200BJ	HPG-20A-45-J6GDI
400 W	1/5	R88G-HPG14A05400B	HPG-14A-05-J2AXW	R88G-HPG14A05400BJ	HPG-14A-05-J6AXW
	1/11	R88G-HPG20A11400B	HPG-20A-11-J2GDK	R88G-HPG20A11400BJ	HPG-20A-11-J6GDK
	1/21	R88G-HPG20A21400B	HPG-20A-21-J2GDK	R88G-HPG20A21400BJ	HPG-20A-21-J6GDK
	1/33	R88G-HPG32A33400B	HPG-32A-33-J2NELA	R88G-HPG32A33400BJ	HPG-32A-33-J6NELA
	1/45	R88G-HPG32A45400B	HPG-32A-45-J2NELA	R88G-HPG32A45400BJ	HPG-32A-45-J6NELA
750 W (200 V)	1/5	R88G-HPG20A05750B	HPG-20A-05-J2FFO	R88G-HPG20A05750BJ	HPG-20A-05-J6FFO
	1/11	R88G-HPG20A11750B	HPG-20A-11-J2FFP	R88G-HPG20A11750BJ	HPG-20A-11-J6FFP
	1/21	R88G-HPG32A21750B	HPG-32A-21-J2NAI	R88G-HPG32A21750BJ	HPG-32A-21-J6NAI
	1/33	R88G-HPG32A33750B	HPG-32A-33-J2NAJ	R88G-HPG32A33750BJ	HPG-32A-33-J6NAJ
	1/45	R88G-HPG32A45750B	HPG-32A-45-J2NAJ	R88G-HPG32A45750BJ	HPG-32A-45-J6NAJ
750 W (400 V)	1/5	R88G-HPG32A052K0B	HPG-32A-05-J2NFG	R88G-HPG32A052K0BJ	HPG-32A-05-J6NFG
	1/11	R88G-HPG32A112K0B	HPG-32A-11-J2NFH	R88G-HPG32A112K0BJ	HPG-32A-11-J6NFH
	1/21	R88G-HPG32A211K5B	HPG-32A-21-J2NFI	R88G-HPG32A211K5BJ	HPG-32A-21-J6NFI
	1/33	R88G-HPG32A33600SB	HPG-32A-33-J2NFJ	R88G-HPG32A33600SBJ	HPG-32A-33-J6NFJ
1 kW	1/5	R88G-HPG32A052K0B	HPG-32A-05-J2NFG	R88G-HPG32A052K0BJ	HPG-32A-05-J6NFG
	1/11	R88G-HPG32A112K0B	HPG-32A-11-J2NFH	R88G-HPG32A112K0BJ	HPG-32A-11-J6NFH
	1/21	R88G-HPG32A211K5B	HPG-32A-21-J2NFI	R88G-HPG32A211K5BJ	HPG-32A-21-J6NFI
1.5 kW	1/5	R88G-HPG32A052K0B	HPG-32A-05-J2NFG	R88G-HPG32A052K0BJ	HPG-32A-05-J6NFG
	1/11	R88G-HPG32A112K0B	HPG-32A-11-J2NFH	R88G-HPG32A112K0BJ	HPG-32A-11-J6NFH
	1/21	R88G-HPG32A211K5B	HPG-32A-21-J2NFI	R88G-HPG32A211K5BJ	HPG-32A-21-J6NFI

Specifications		Without key		With key and tap	
Servo-motor rated output	Reduc-tion ratio	Decelerator model	Model on nameplate	Decelerator model	Model on nameplate
2 kW	1/5	R88G-HPG32A052K0B	HPG-32A-05-J2NFG	R88G-HPG32A052K0BJ	HPG-32A-05-J6NFG
	1/11	R88G-HPG32A112K0B	HPG-32A-11-J2NFH	R88G-HPG32A112K0BJ	HPG-32A-11-J6NFH
2.6 kW (200 V) 3 kW (400 V)	1/5	R88G-HPG32A053K0B	HPG-32A-05-J2MCK	R88G-HPG32A053K0BJ	HPG-32A-05-J6MCK

● Decelerator (backlash: 3 arcminutes max.) for 1,500-r/min Servomotors

Specifications		Without key		With key and tap	
Servo-motor rated output	Reduc-tion ratio	Decelerator model	Model on nameplate	Decelerator model	Model on nameplate
1.5 kW	1/5	R88G-HPG32A053K0B	HPG-32A-05-J2MCK	R88G-HPG32A053K0BJ	HPG-32A-05-J6MCK
	1/11	R88G-HPG32A112K0SB	HPG-32A-11-J2MCL	R88G-HPG32A112K0SBJ	HPG-32A-11-J6MCL
	1/21	R88G-HPG50A21900TB	HPG-50A-21-J2BADB	R88G-HPG50A21900TBJ	HPG-50A-21-J6BADB
	1/33	R88G-HPG50A33900TB	HPG-50A-33-J2BADB	R88G-HPG50A33900TBJ	HPG-50A-33-J6BADB
2.7 kW (200 V) 3 kW (400 V)	1/5	R88G-HPG50A055K0SB	HPG-50A-05-J2EBCH	R88G-HPG50A055K0SBJ	HPG-50A-05-J6EBCH
	1/11	R88G-HPG50A115K0SB	HPG-50A-11-J2EBDH	R88G-HPG50A115K0SBJ	HPG-50A-11-J6EBDH
	1/20	R88G-HPG65A205K0SB	HPG-65A-20-J2EBCH	R88G-HPG65A205K0SBJ	HPG-65A-20-J6EBCH
	1/25	R88G-HPG65A255K0SB	HPG-65A-25-J2EBCH	R88G-HPG65A255K0SBJ	HPG-65A-25-J6EBCH

Decelerator (Backlash: 15 Arcminutes Max.)

For Decelerators (backlash: 15 arcminutes max.), the product nameplate indicates the model number, rated output, reduction ratio, serial number, and date of manufacture.

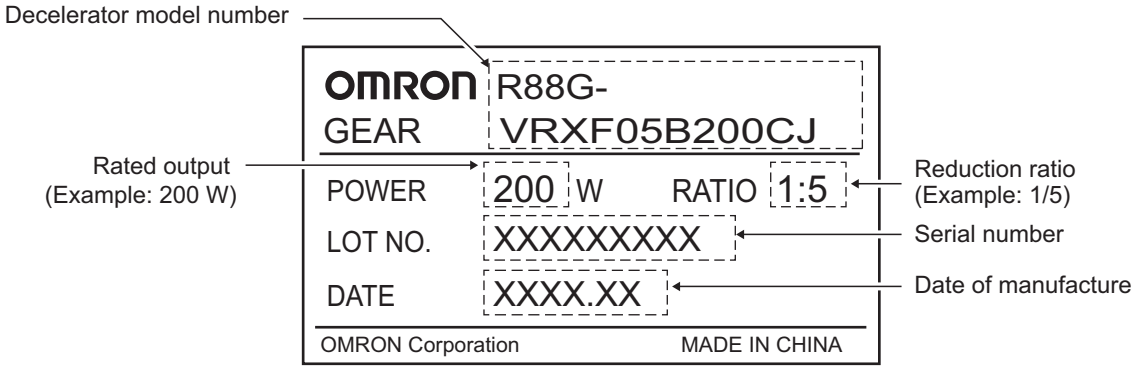

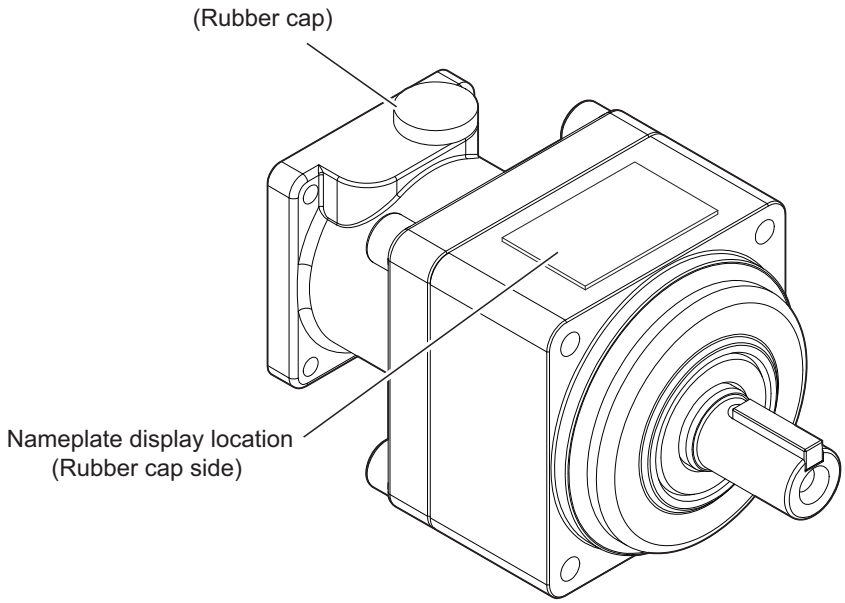

Integrated Cable

The following product models come with a shield clamp. The shield clamp is used for mounting to a Servo Drive. Keep it until the use.

As for a shield clamp, refer to *Shield Clamp Bracket* on page 2-18.

Shield Clamp

This product comes with two screws (M4×12) for mounting.

Related Manuals

The following are the manuals related to this manual. Use these manuals for reference.

Manual name	Cat. No.	Model numbers	Application	Description
NX-series CPU Unit Hardware User's Manual	W535	NX701-□□□□	Learning the basic specifications of the NX-series CPU Units, including introductory information, designing, installation, and maintenance. Mainly hardware information is provided.	An introduction to the entire NX-series system is provided along with the following information on the CPU Unit. • Features and system configuration • Introduction • Part names and functions • General specifications • Installation and wiring • Maintenance and inspection Use this manual together with the *NJ/NX-series CPU Unit Software User's Manual* (Cat. No. W501).
NJ-series CPU Unit Hardware User's Manual	W500	NJ501-□□□□ NJ301-□□□□ NJ101-□□□□	Learning the basic specifications of the NJ-series CPU Units, including introductory information, designing, installation, and maintenance. Mainly hardware information is provided.	An introduction to the entire NJ-series system is provided along with the following information on the CPU Unit. • Features and system configuration • Introduction • Part names and functions • General specifications • Installation and wiring • Maintenance and inspection Use this manual together with the *NJ/NX-series CPU Unit Software User's Manual* (Cat. No. W501).

Manual name	Cat. No.	Model numbers	Application	Description
NY-series IPC Machine Controller Industrial Box PC Hardware User's Manual	W556	NY512-□□□□	Learning the basic information about IPC Machine Controller Industrial Box PCs. The basic information related to installation, usage procedures, and maintenance is included. Mainly hardware information is provided.	An introduction to the entire IPC Machine Controller system is provided along with the following information. • Introduction • System configuration • Specifications • Installation • Usage procedures • Maintenance Use this manual together with the *NY-series IPC Machine Controller Industrial Panel PC / Industrial Box PC Software User's Manual* (Cat. No. W558).
NY-series IPC Machine Controller Industrial Panel PC Hardware User's Manual	W557	NY532-□□□□	Learning the basic information about IPC Machine Controller Industrial Panel PCs. The basic information related to installation, usage procedures, and maintenance is included. Mainly hardware information is provided.	An introduction to the entire IPC Machine Controller system is provided along with the following information. • Introduction • System configuration • Specifications • Installation • Usage procedures • Maintenance Use this manual together with the *NY-series IPC Machine Controller Industrial Panel PC / Industrial Box PC Software User's Manual* (Cat. No. W558).
NJ/NX-series CPU Unit Software User's Manual	W501	NX701-□□□□ NX102-□□□□ NX1P2-□□□□ NJ501-□□□□ NJ301-□□□□ NJ101-□□□□	Learning how to program and set up an NJ/NX-series CPU Unit. Mainly software information is provided.	The following information is provided on a Controller built with an NJ/NX-series CPU Unit. • CPU Unit operation • CPU Unit features • Initial settings • Programming based on IEC 61131-3 language specifications Use this manual together with the *NX-series CPU Unit Hardware User's Manual* (Cat. No. W535) or *NJ-series CPU Unit Hardware User's Manual* (Cat. No. W500).

Manual name	Cat. No.	Model numbers	Application	Description
NJ/NX-series CPU Unit Built-in EtherCAT® Port User's Manual	W505	NX701-□□□□ NX102-□□□□ NX1P2-□□□□ NJ501-□□□□ NJ301-□□□□ NJ101-□□□□	Learning how to configure the EtherCAT communications system.	Describes setup procedures for building the EtherCAT communications system.
NY-series IPC Machine Controller Industrial Panel PC / Industrial Box PC Software User's Manual	W558	NY532-□□□□ NY512-□□□□	Learning how to program IPC Machine Controller functions and set up a system in the NY-series Machine Controller.	The following information is provided on a Machine Controller. • Controller operation • Controller features • Controller settings • Programming based on IEC 61131-3 language specifications Use this manual together with the *NY-series IPC Machine Controller Industrial Panel PC Hardware User's Manual* (Cat. No. W557) or *NY-series IPC Machine Controller Industrial Box PC Hardware User's Manual* (Cat. No. W556).
NX-series NX102 CPU Unit Hardware User's Manual	W593	NX102-□□□□	Learning the basic specifications of the NX102 CPU Units, including introductory information, designing, installation, and maintenance. Mainly hardware information is provided.	An introduction to the entire NX102 system is provided along with the following information on the CPU Unit. • Features and system configuration • Introduction • Part names and functions • General specifications • Installation and wiring • Maintenance and inspection Use this manual together with the *NJ/NX-series CPU Unit Software User's Manual* (Cat. No. W501).

Manual name	Cat. No.	Model numbers	Application	Description
NX-series NX1P2 CPU Unit Hardware User's Manual	W578	NX1P2-□□□□	Learning the basic specifications of the NX-series NX1P2 CPU Units, including introductory information, designing, installation, and maintenance. Mainly hardware information is provided.	An introduction to the entire NX1P2 CPU Unit system is provided along with the following information on the NX1P2 CPU Unit. • Features and system configuration • Introduction • Part names and functions • General specifications • Installation and wiring • Maintenance and inspection Use this manual together with the *NJ/NX-series CPU Unit Software User's Manual* (Cat. No. W501).
NJ/NX-series CPU Unit Motion Control User's Manual	W507	NX701-□□□□ NX102-□□□□ NX1P2-□□□□ NJ501-□□□□ NJ301-□□□□ NJ101-□□□□	Learning about motion control settings and programming concepts.	The settings and operation of the CPU Unit and programming concepts for motion control are described.
NY-series IPC Machine Controller Industrial Panel PC / Industrial Box PC Motion Control User's Manual	W559	NY532-□□□□ NY512-□□□□	Learning about motion control settings and programming concepts related to the NY-series IPC Machine Controller.	The settings and operation of the Controller and programming concepts for motion control are described.
NX-series Safety Control Units User's Manual	Z930	NX-SL□□□□ NX-SI□□□□ NX-SO□□□□	Learning how to use the NX-series Safety Control Units.	Describes the hardware, setup methods and functions of the NX-series Safety Control Units.
NX-series Safety Control Unit Instructions Reference Manual	Z931	NX-SL□□□□	Learning the command specifications of the safety CPU Units.	Information about commands for safety CPU unit is provided.
Sysmac Studio Version 1 Operation Manual	W504	SYSMAC-SE2 □□□	Learning about the operating procedures and functions of the Sysmac Studio.	Describes the operating procedures of the Sysmac Studio.
Sysmac Studio Drive Functions Operation Manual	I589	SYSMAC-SE2 □□□	Learning how to set up and adjust the Servo Drives.	Describes the operating procedures of the Sysmac Studio.
SYSMAC CJ-series Position Control Unit Operation Manual	W487	CJ1W-NC281 CJ1W-NC481 CJ1W-NC881 CJ1W-NCF81 CJ1W-NC482 CJ1W-NC882 CJ1W-NCF82	Learning about the NC Units (CJ1W-NC281/ 481/ 881/ F81/ 482/ 882/ F82).	Describes the setup methods and operating procedures of the NC Units.

Manual name	Cat. No.	Model numbers	Application	Description
G9SP-series Safety Controller Operation Manual	Z922	G9SP-N10S G9SP-N10D G9SP-N20S	Learning how to use the G9SP-series safety Controllers.	Describes the hardware, setup methods and functions of the G9SP-series safety Controllers.

Terminology

Term	Abbreviation	Description
Cable Redundancy Function	---	A function to continue communications with EtherCAT slaves even if a communications cable is broken in the EtherCAT communications path.
CAN application protocol over EtherCAT	CoE	A CAN application protocol service implemented on EtherCAT.
CAN in Automation	CiA	CiA is the international users' and manufacturers' group that develops and supports higher-layer protocols.
Device Profile	---	Collection of device dependent information and functionality providing consistency between similar devices of the same device type.
Distributed Clocks	DC	Method to synchronize slaves and maintain a global time base.
EtherCAT Slave Controller	ESC	A controller for EtherCAT slave communication.
EtherCAT Slave Information	ESI	An XML file that contains setting information for an EtherCAT slave.
EtherCAT State Machine	ESM	An EtherCAT communication state machine.
EtherCAT Technology Group	ETG	The ETG is a global organization in which OEM, End Users and Technology Providers join forces to support and promote the further technology development.
Fieldbus Memory Management Unit	FMMU	Single element of the fieldbus memory management unit: one correspondence between a coherent logical address space and a coherent physical memory location.
Index	---	Address of an object within an application process.
Instance	---	When there are the several same functions independently in objects, each object is called as an instance. For example, there are eight instances SS1 command 1 to SS1 command 8 in SS1 command.
Object	---	Abstract representation of a particular component within a device, which consists of data, parameters, and methods.
Object Dictionary	OD	Data structure addressed by Index and Subindex that contains description of data type objects, communication objects and application objects.
Physical Device Internal Interface	PDI	A series of elements to access data link services from the application layer.
Power Drive System	PDS	A power drive system consisting of a Servo Drive, an inverter, and other components.
Process Data	---	Collection of application objects designated to be transferred cyclically or acyclically for the purpose of measurement and control.
Process Data Object	PDO	Structure described by mapping parameters that contain one or several process data entities.
Receive PDO	RxPDO	A process data object received by an EtherCAT slave.

Term	Abbreviation	Description
Ring Disconnection Status	---	A status in which communications continue even if an EtherCAT physical layer link is disconnected in a ring topology on the EtherCAT system.
safe state	---	The status of a device or piece of equipment when the risk of danger to humans has been reduced to an acceptable level.
safety control	---	A type of control that uses devices, functions, and data that are designed with special safety measures.
Safety Controller	---	Generic terms of a controller to perform safety control
Safety Current Position	---	It is a position data that are assured in functional safety. The position data of 32 bit is set as Safety Original Position “Zero”. The position data of single rotation can be read at 20 bit. While the upper 13 bit can be used, the lower 7 bit cannot be assured.
Safety Current Pulse Position	---	It is a position data that are assured in functional safety. The position data of 32 bit is set as a base position that is obtained from encoder. The position data of single rotation can be read at 20 bit. While the upper 13 bit can be used, the lower 7 bit cannot be assured. The data is read inside a Servo Drive while a safety origin position is fixed or SOS function is monitoring a position.
Safety over EtherCAT	FSoE	A system to communicate for the functional safety over EtherCAT.
safety process data communications	---	A type of I/O data communications that is used for safety control purposes.
safety reaction time	---	The time required for the system to enter a safe state in a worst-case scenario after the occurrence of a safety-related input (press of an emergency stop pushbutton switch, interruption of a light curtain, opening of a safety door, etc.) or device failure. The reaction time of the system includes the reaction times of sensors and actuators, just like the reaction time for a Controller or network.
Safety Related Application Parameter	SRA Parameter	Indicates objects related to the safety functions. Set the parameter by the setting tool of the safety controller. The parameter is retained by the safety controller. The data attribute of objects is [S]. For more information, refer to *9-1 Object Description Format* on page 9-5.
Service Data Object	SDO	CoE asynchronous mailbox communications where all objects in the object dictionary can be read and written.
Slave Information Interface	SII	Slave information stored in the nonvolatile memory of each slave.
standard control	---	A type of control that use devices, functions, and data that are designed for general control purposes. This term is used to differentiate from a safety control.
Standard Controller	---	Generic terms of a controller to perform standard control

Term	Abbreviation	Description
Subindex	---	Sub-address of an object within the object dictionary.
Sync Manager	SM	Collection of control elements to coordinate access to concurrently used objects.
Transmit PDO	TxPDO	A process data object sent from an EtherCAT slave.

Revision History

The manual revision code is a number appended to the end of the catalog number found in the front and back cover.

Example

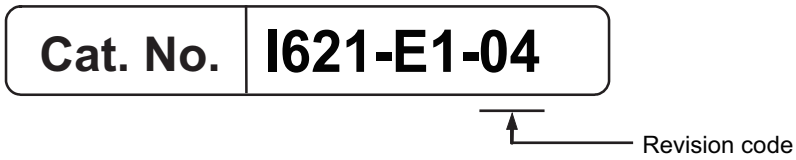

Revision code	Date	Revised content
01	June 2020	Original production
02	November 2020	• Made changes accompanying the support of cable redundancy function. • Corrected mistakes.
03	March 2021	Corrected mistakes.
04	December 2021	• Added *4-7 Noise Filter Installation Conditions When the Total Wire Length Is Long* on page 4-51. • Corrected mistakes.

1

Features and System Configuration

This section explains the features of the Servo Drive and name of each part.

1-1 Outline 1-2
- 1-1-1 Features of 1S-series Servo Drive Advance Type 1-2
- 1-1-2 EtherCAT 1-3
- 1-1-3 Object Dictionary 1-4

1-2 System Configuration 1-5

1-3 Names and Functions 1-6
- 1-3-1 Servo Drive Part Names 1-6
- 1-3-2 Servo Drive Functions 1-10
- 1-3-3 Servomotor Part Names 1-13
- 1-3-4 Servomotor Functions 1-15
- 1-3-5 Shield Clamp Part Names 1-16

1-4 System Block Diagram 1-17

1-5 Applicable Standards 1-21
- 1-5-1 EU Directives 1-21
- 1-5-2 UL and cUL Standards 1-22
- 1-5-3 Korean Radio Regulations (KC) 1-23
- 1-5-4 SEMI F47 1-23
- 1-5-5 Australian EMC Labeling Requirements (RCM) 1-23
- 1-5-6 EAC Requirements 1-23

1-6 Unit Versions 1-24
- 1-6-1 Confirmation Method 1-24
- 1-6-2 Unit Versions and Sysmac Studio Versions 1-24

1-7 Procedures to Start Operation 1-25
- 1-7-1 Overall Procedure 1-25
- 1-7-2 Procedure Details 1-27

1-1 Outline

The 1S-series Servo Drives Advance Type with Built-in EtherCAT Communications are provided with 8 safety functions and support 100-Mbps EtherCAT.

When you use the 1S-series Servo Drive with a Machine Automation Controller NJ/NX-series CPU Unit, NY-series IPC Machine Controller, or Position Control Unit with EtherCAT (Model: CJ1W-NC□8□), you can construct a high-speed and sophisticated positioning control system.

You need only one communications cable to connect the Servo Drive and the Controller, and also only one cable to connect the Servo Drive and the Servomotor.

With adjustment functions, adaptive notch filter, notch filter, and damping control, you can set up a system that provides stable operation by suppressing vibration in low-rigidity machines.

Moreover, with the two-degree-of-freedom (TDF) control structure, you can easily adjust high-precision positioning.

1-1-1 Features of 1S-series Servo Drive Advance Type

The 1S-series Servo Drives Advance Type have the following features.

Realization of Safer Equipment and More Efficient Production

The following eight safety functions that comply with the SIL3/PLe functional safety levels are provided: STO, SS1, SS2, SOS, SLS, SLP, SDI, and SBC. This product can improve not only equipment safety but also production efficiency by shortening production facility downtime.
By using it with other OMRON safety products, a device can be designed more easily.

Use of only One Cable for the Motor, Encoder, and Brake

One Cable Technology is adopted for the cable connecting the Servo Drive and the Servomotor, unifying the three cables for supply of power to the motor, the encoder, and the brake into one cable.
This economization of wiring and space can downsize a device and reduce design and maintenance work.

Optimal Functionality and Operability by Standardizing Specifications

As a Sysmac Device, the 1S-series Servo Drive Advance Type with built-in EtherCAT communications is designed to achieve optimum functionality and ease of operation when it is used together with the NJ/NX-series Machine Automation Controller, NY-series IPC Machine Controller, and the Sysmac Studio Automation Software.

Sysmac Device is a generic term for OMRON control devices such as an EtherCAT Slave, designed with unified communications specifications and user interface specifications.

Data Transmission Using EtherCAT Communications

Combining the 1S-series Servo Drive with a Machine Automation Controller NJ/NX-series CPU Unit, NY-series IPC Machine Controller, or Position Control Unit with EtherCAT (Model: CJ1W-NC□8□) enables you to exchange all position information with the controller in high-speed data communications.

Since the various control commands are transmitted via data communications, Servomotor's operational performance is maximized without being limited by interface specifications such as the response frequency of the encoder feedback pulses.

You can use the Servo Drive's various control parameters and monitor data on a host controller, and unify the system data for management.

EtherCAT Communications Cycle of 125 µs

Combination with an NX7 Machine Automation Controller enables high-speed and high-precision motion control at the communications cycle of 125 µs.

High Equipment Utilization Efficiency with 400-V Models

The 400-V models are provided for use with large equipment, at overseas facilities and in wide-ranging applications and environment. Since the utilization ratio of facility equipment also increases, the TCO (Total Cost of Ownership) will come down.

Achievement of Safety on EtherCAT Network

You can use NX-series Safety Control Units to integrate safety controls in a sequence and motion control system.

The 1S-series Servo Drives Advance Type support the FSoE (Safety over EtherCAT) protocol as the safety communications. You can build the safety system that uses the safety functions from the safety controller on the EtherCAT network.

Suppressing Vibration of Low-rigidity Machines During Acceleration/Deceleration

The damping control function suppresses vibration of low-rigidity machines or devices whose tips tend to vibrate. The function can also be used for damping control for larger constructions as it supports vibration ranging from 0.5 to 300 Hz. You can maximize the performance of the Servomotor by adjusting the trade-off between the damping time and the amount of peak control.

Easy Adjustment with TDF Control Structure

The TDF control structure allows you to separately adjust the amount of overshooting and the resistance against disturbance. With this feature, you can easily achieve high-precision positioning, which is difficult to achieve with the one-degree-of-freedom (ODF) control.

1-1-2 EtherCAT

EtherCAT is an open high-speed industrial network system that conforms to Ethernet (IEEE 802.3). Each node achieves a short communications cycle time by transmitting Ethernet frames at high speed. A mechanism that allows sharing clock information enables high-precision synchronization control with low communications jitter.

1-1-3 Object Dictionary

1S-series Servo Drives Advance Type with Built-in EtherCAT Communications use the object dictionary for CAN application protocol over EtherCAT (CoE) as a base for communications.

An object is an abstract representation of a particular component within a device, which consists of data, parameters, and methods.

An object dictionary is a data structure that contains description of data type objects, communication objects and application objects.

All objects are assigned four-digit hexadecimal indexes in the areas shown in the following table.

Index (hex)	Area	Description
0000 to 0FFF	Data Type Area	Definitions of data types.
1000 to 1FFF	CoE Communications Area	Definitions of objects that can be used by all servers for designated communications.
2000 to 2FFF	Manufacturer Specific Area 1	Objects with common definitions for all OMRON products.
3000 to 5FFF	Manufacturer Specific Area 2	Objects with common definitions for all 1S-series Servo Drives (servo parameters).*1
6000 to DFFF	Device Profile Area	Variables defined in the Servo Drive's CiA402 drive profile.
E000 to EFFF	Device Profile Area 2	Objects defined in the Servo Drive's FSoE CiA402 slave connection.
F000 to FFFF	Device Area	Objects defined in a device.

*1. For details on servo parameters, refer to *Section 9 Details on Servo Parameters*.

1-2 System Configuration

The system configuration for a 1S-series Servo Drive Advance Type with Built-in EtherCAT Communications is shown below.

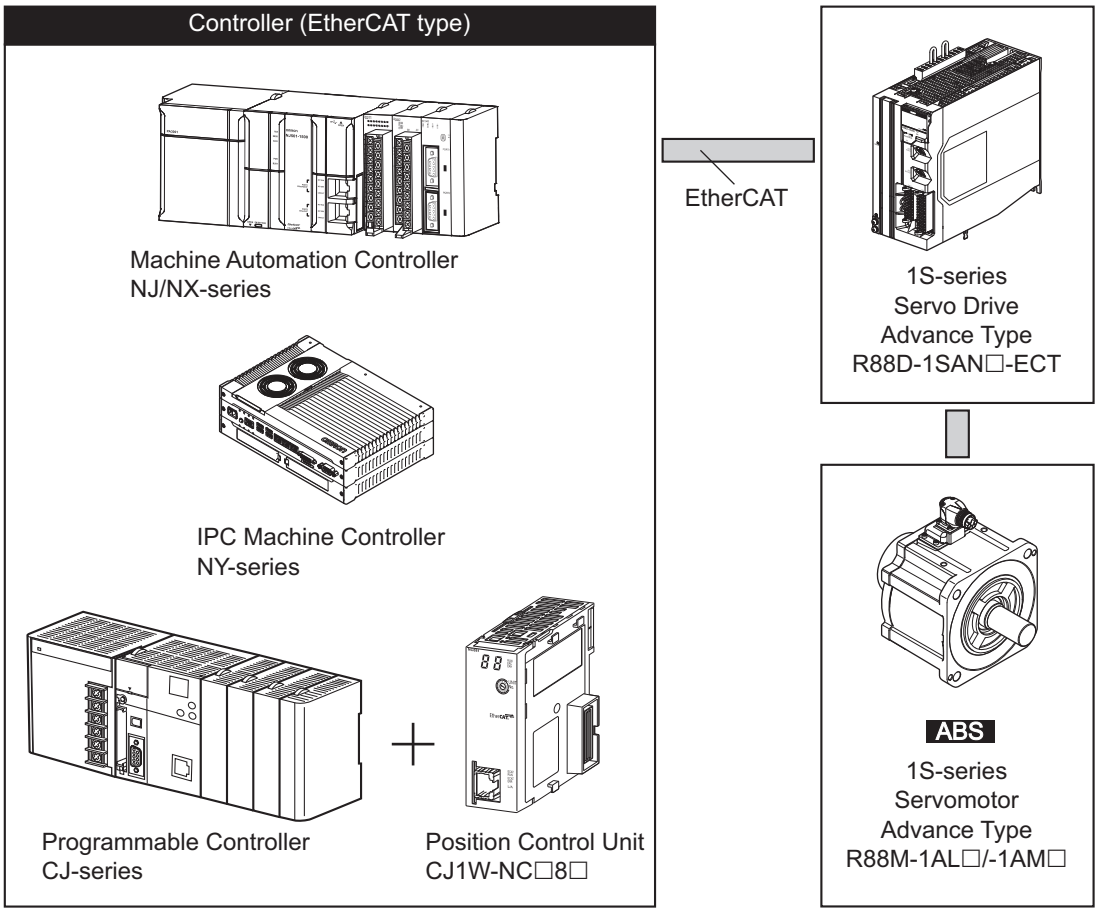

1-3 Names and Functions

This section describes the names and functions of Servo Drive parts.

1-3-1 Servo Drive Part Names

The Servo Drive part names are given below.

R88D-1SAN02H-ECT/-1SAN04H-ECT/-1SAN08H-ECT/-1SAN10H-ECT

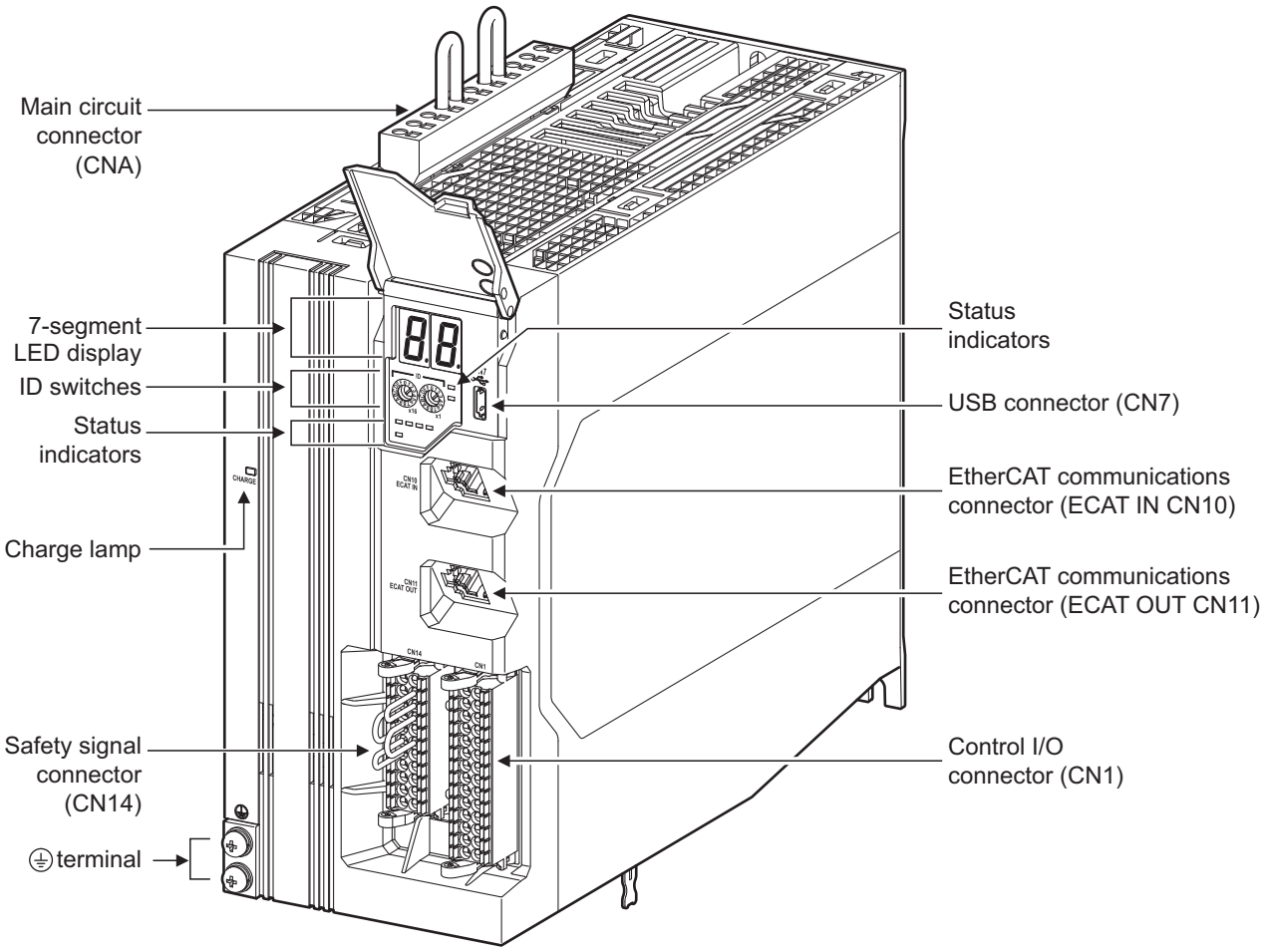

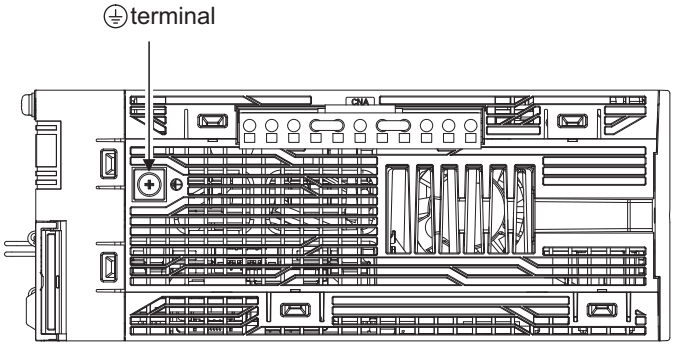
⏚terminal
CN1A

Top view

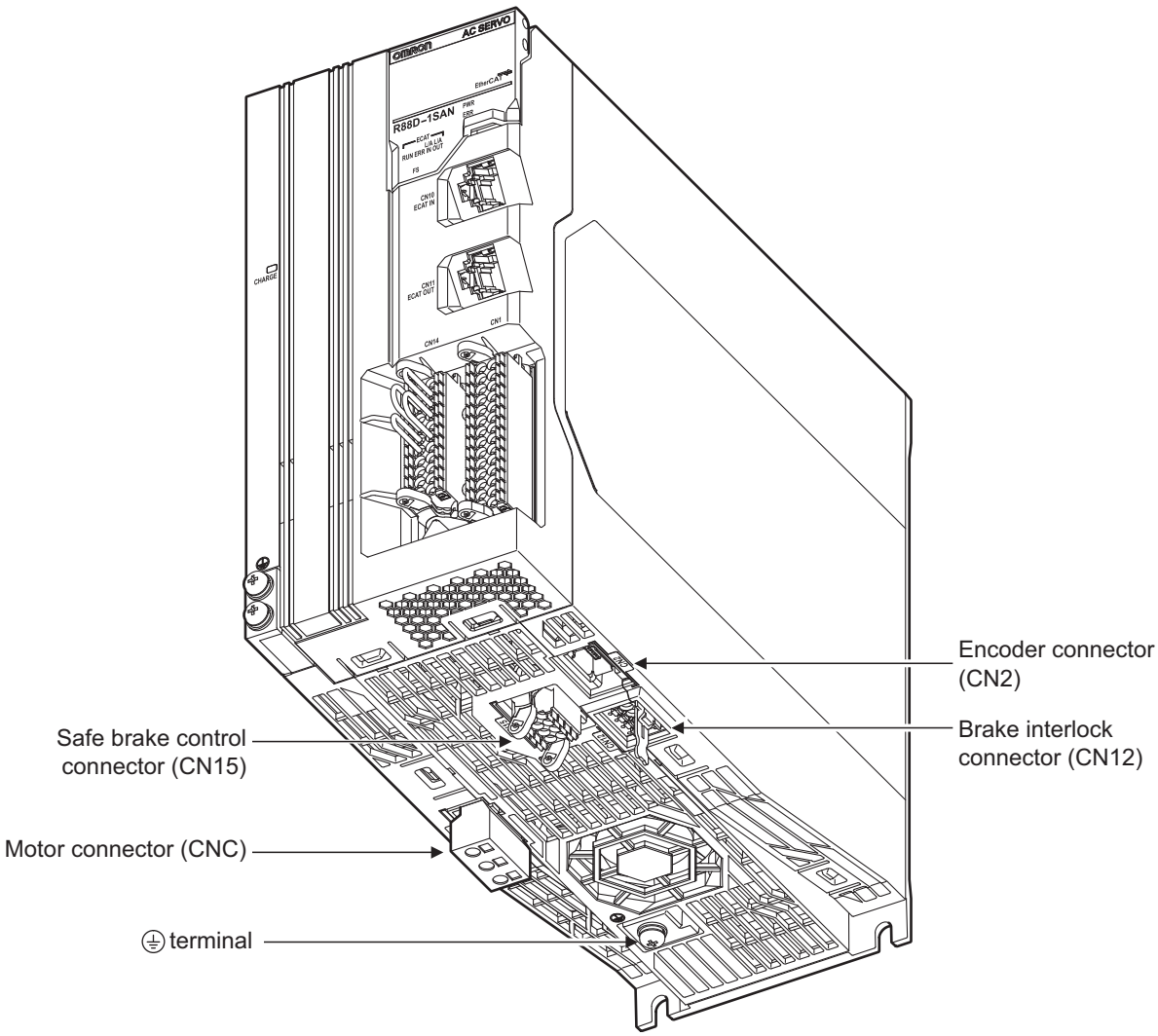
OMRON
AC SERVO
EtherCAT
R88D-1SAN
PWR
ERR
ECAT
L/A L/A
RUN ERR IN OUT
FS
CN10
ECAT IN
CN11
ECAT OUT
CN1
CN14
CHARGE
Encoder connector (CN2)
Brake interlock connector (CN12)
Safe brake control connector (CN15)
Motor connector (CNC)
⏚terminal

R88D-1SAN15H-ECT/-1SAN20H-ECT/-1SAN30H-ECT/-1SAN10F-ECT/ -1SAN15F-ECT/-1SAN20F-ECT/-1SAN30F-ECT

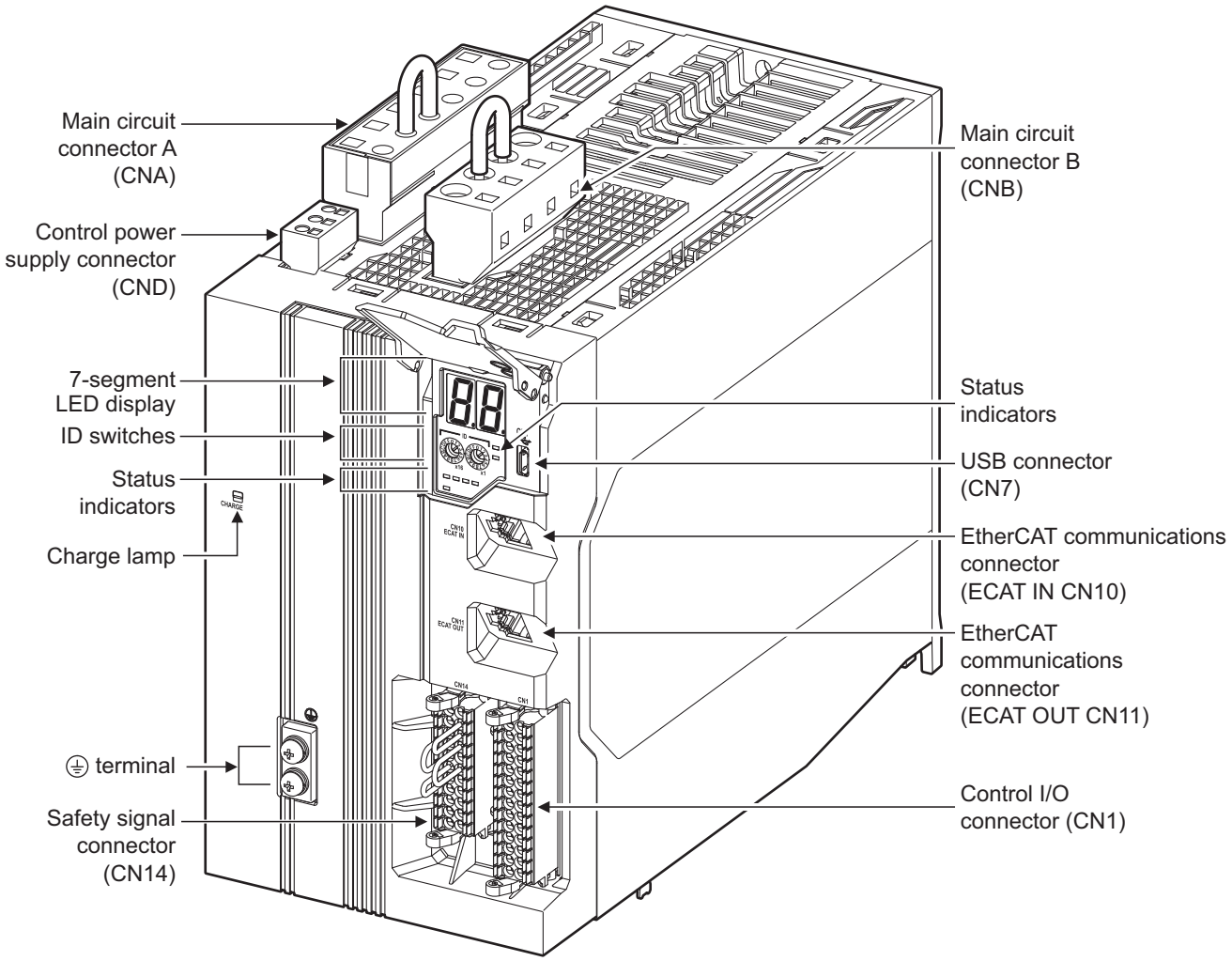

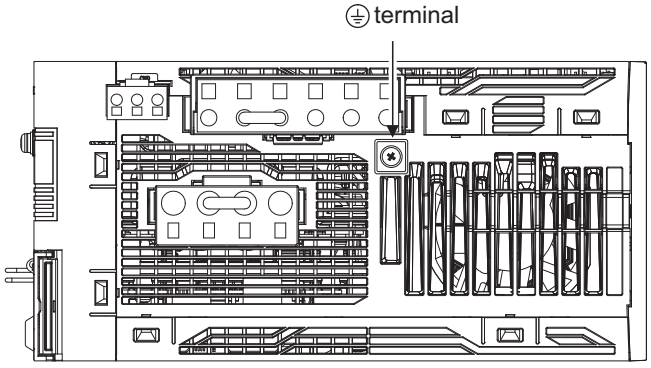

Top view

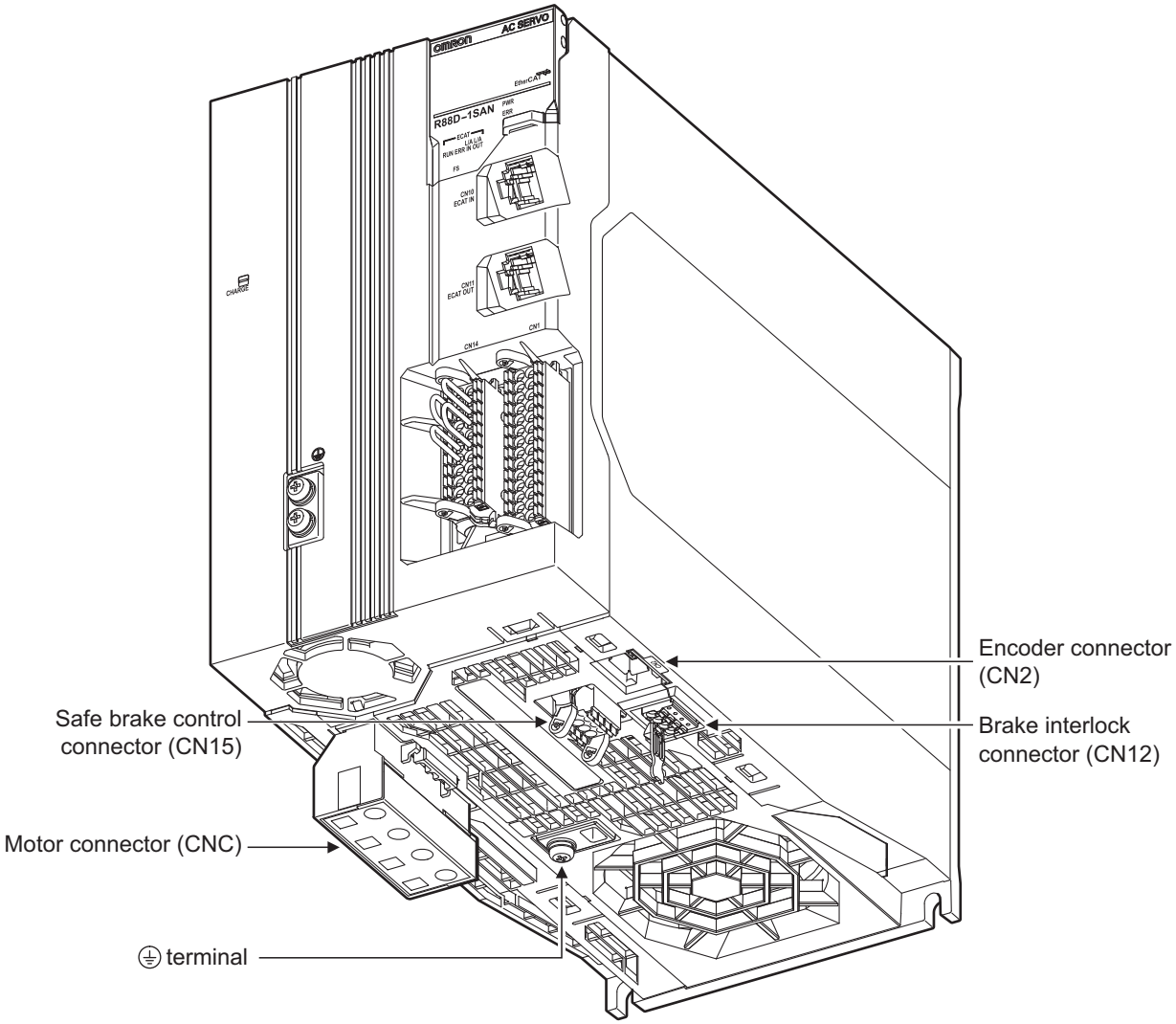
OMRON
AC SERVO
EtherCAT
R88D-1SAN
PWR
ERR
ECAT
L/A L/A
RUN ERR IN OUT
FS
CN10
ECAT IN
CN11
ECAT OUT
CN1
CN14
CHARGE
Encoder connector
(CN2)
Safe brake control
connector (CN15)
Brake interlock
connector (CN12)
Motor connector (CNC)
⏚ terminal

1-3-2 Servo Drive Functions

The functions of each part of the Servo Drive are described below.

Status Indicators

The following seven indicators are mounted.

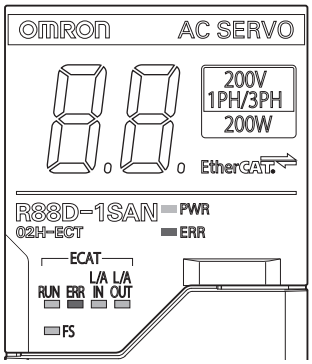

Name	Color	Description
PWR	Green	Displays the status of control power supply.
ERR	Red	Gives the Servo Drive error status.
ECAT-RUN	Green	Displays the EtherCAT communications status.
ECAT-ERR	Red	
ECAT-L/A IN, ECAT-L/A OUT	Green	Lights or flashes according to the status of a link in the EtherCAT physical layer.
FS	Red/green	Displays the safety communications status.

For details on display, refer to *5-1-2 Status Indicators* on page 5-3.

7-segment LED Display

A 2-digit 7-segment LED display shows error numbers, the Servo Drive status, and other information.

Refer to *10-2-3 Checking the Displays* on page 10-5 for details.

ID Switches

Two rotary switches (0 to F hex) are used to set the EtherCAT node address.

Charge Lamp

Lights when the main circuit power supply carries electric charge.

Control I/O Connector (CN1)

Used for connecting command input signals and I/O signals to an external device.

Encoder Connector (CN2)

Connector for the encoder installed in the Servomotor.

EtherCAT Communications Connectors (ECAT IN CN10, ECAT OUT CN11)

These connectors are for EtherCAT communications.

USB Connector (CN7)

USB-Micro B Communications connector for the computer. This connector enables USB 2.0 Full Speed (12 Mbps) communications.

Brake Interlock Connector (CN12)

Used for brake interlock signals.

Main Circuit Connector (CNA)

Connector for the main circuit power supply input, control power supply input, external regeneration resistor, and DC reactor.

Applicable models: R88D-1SAN02H-ECT/-1SAN04H-ECT/-1SAN08H-ECT/-1SAN10H-ECT

Main Circuit Connector A (CNA)

Connector for the main circuit power supply input and external regeneration resistor.

Applicable models: R88D-1SAN15H-ECT/-1SAN20H-ECT/-1SAN30H-ECT/-1SAN10F-ECT/-1SAN15F-ECT/-1SAN20F-ECT/-1SAN30F-ECT

Main Circuit Connector B (CNB)

Connector for a DC reactor.

Applicable models: R88D-1SAN15H-ECT/-1SAN20H-ECT/-1SAN30H-ECT/-1SAN10F-ECT/-1SAN15F-ECT/-1SAN20F-ECT/-1SAN30F-ECT

Control Power Supply Connector (CND)

Connector for control power supply input.

Applicable models: R88D-1SAN15H-ECT/-1SAN20H-ECT/-1SAN30H-ECT/-1SAN10F-ECT/-1SAN15F-ECT/-1SAN20F-ECT/-1SAN30F-ECT

Motor Connector (CNC)

Connector for the power line to the phase U, V, and W of the Servomotor.

The connector differs depending on the model.

Safety Signal Connector (CN14)

Used for connecting a safety device. The short-circuit wire is installed on the safety signals before shipment.

Safe Brake Control Connector (CN15)

Used for connecting to the brake to be controlled by safe brake control.

⏚ Terminal

The number of ⏚ terminals of the Servo Drives and their connection targets are as follows.

Servo Drive model	Number of ⏚ terminals	Connection to
R88D-1SAN02H-ECT/ -1SAN04H-ECT/-1SAN08H-ECT/ -1SAN10H-ECT	1 on top	PE wire of the main circuit power supply cable. FG wire inside the control panel, and FG wire for the Integrated Cable and Shield Clamp.
	2 on front	
	1 on bottom	
R88D-1SAN15H-ECT/ -1SAN20H-ECT/-1SAN30H-ECT/ -1SAN10F-ECT/-1SAN15F-ECT/ -1SAN20F-ECT/-1SAN30F-ECT	1 on top	PE wire of the main circuit power supply cable. FG wire inside the control panel and the Shield Clamp.
	2 on front	
	1 on bottom	

1-3-3 Servomotor Part Names

The Servomotor part names are given below.

Flange Size of 60×60, 80×80

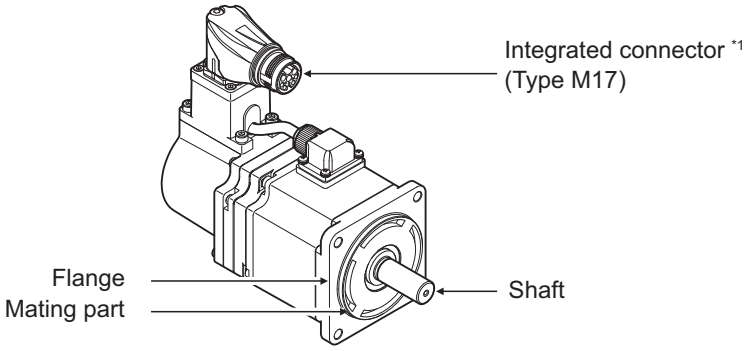

200 VAC 200 W Servomotors (without Brake)

*1. For servomotors without Brake, brake wire signals are not used (terminal open).

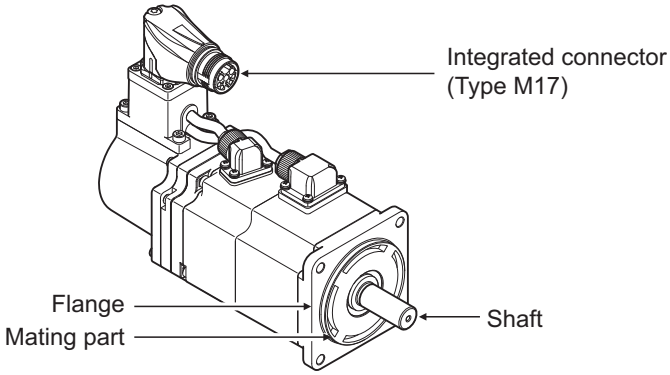

200 VAC 200 W Servomotors (with Brake)

Flange Size of 100×100, 130×130, 180×180

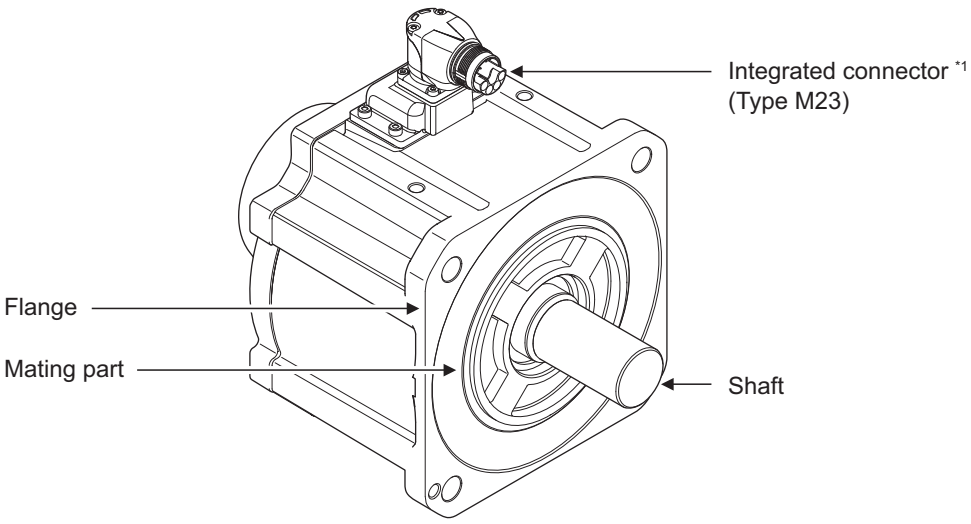

400 VAC 3 kW Servomotors (without Brake)

*1. For servomotors without Brake, brake wire signals are not used (terminal open).

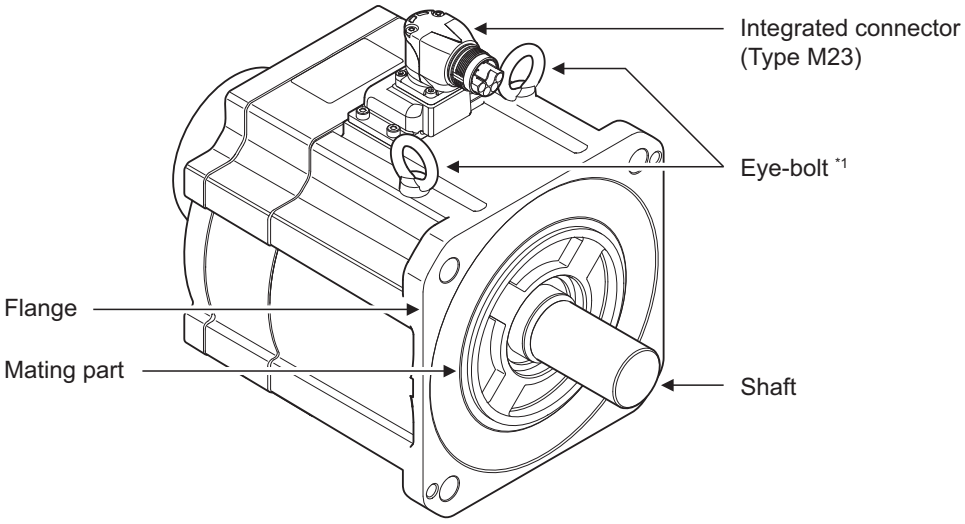

400 VAC 3 kW Servomotors (with Brake)

*1. In some cases, eye bolts are not equipped, depending on the Servomotor's mass.

1-3-4 Servomotor Functions

The functions of each part of the Servomotor are described below.

Shaft

The load is mounted on this shaft.

The direction which is in parallel with the shaft is called the thrust direction, and the direction which is perpendicular to the shaft is called the radial direction.

Flange

Used for mounting the Servomotor on the equipment.

Fit the mating part into the equipment and use the mounting holes to screw the Servomotor.

Integrated Connector

This is an integrated connector that can connect each cable for power, encoder and brake all at once.

The power cable supplies power to the phases U, V, and W of the Servomotor.

The encoder cable supplies power to the encoder of the Servomotor and communicates with the Servo Drive.

The brake cable supplies power to the brake coil.

Eye-bolt

Used for lifting and moving the motor by putting a wire rope, for example, through the shaft.

1-3-5 Shield Clamp Part Names

The shield clamp part names are given below.

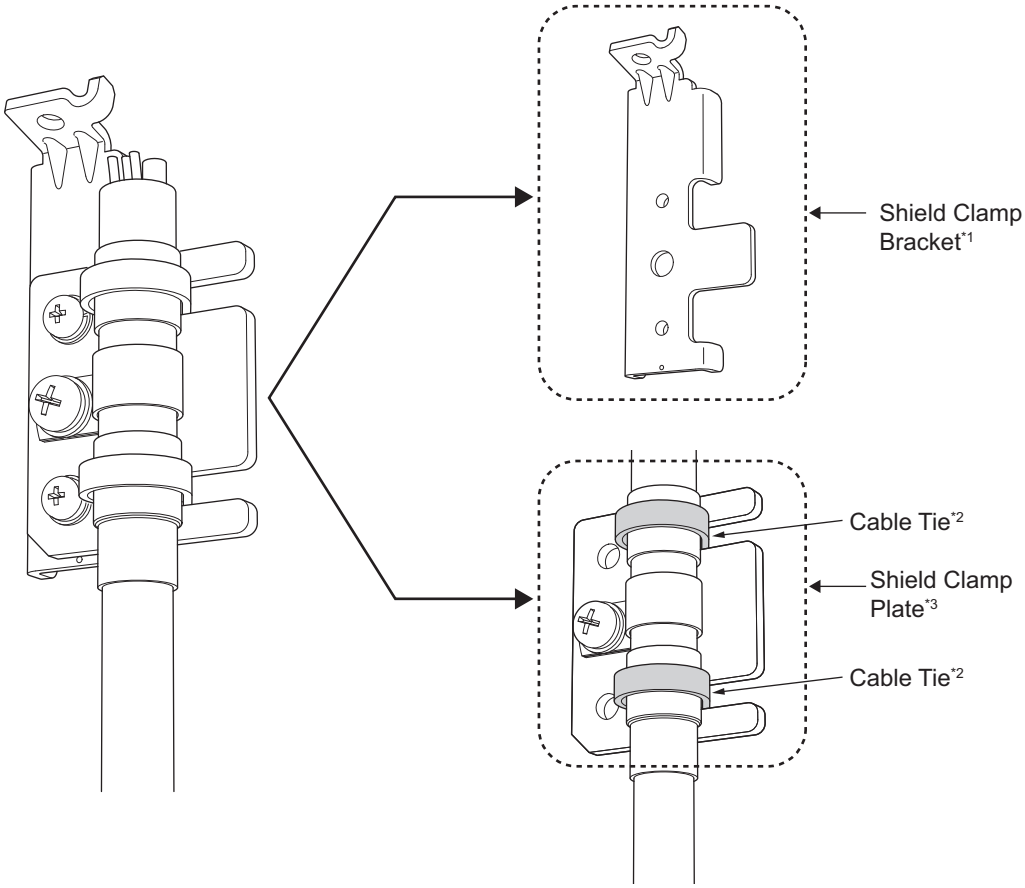

*1. It comes with a cable.

*2. Do not cut the cable tie.

*3. It is equipped with a cable.

1-4 System Block Diagram

The block diagram of a 1S-series Servo Drive Advance Type with Built-in EtherCAT Communications is shown below.

R88D-1SAN02H-ECT/-1SAN04H-ECT

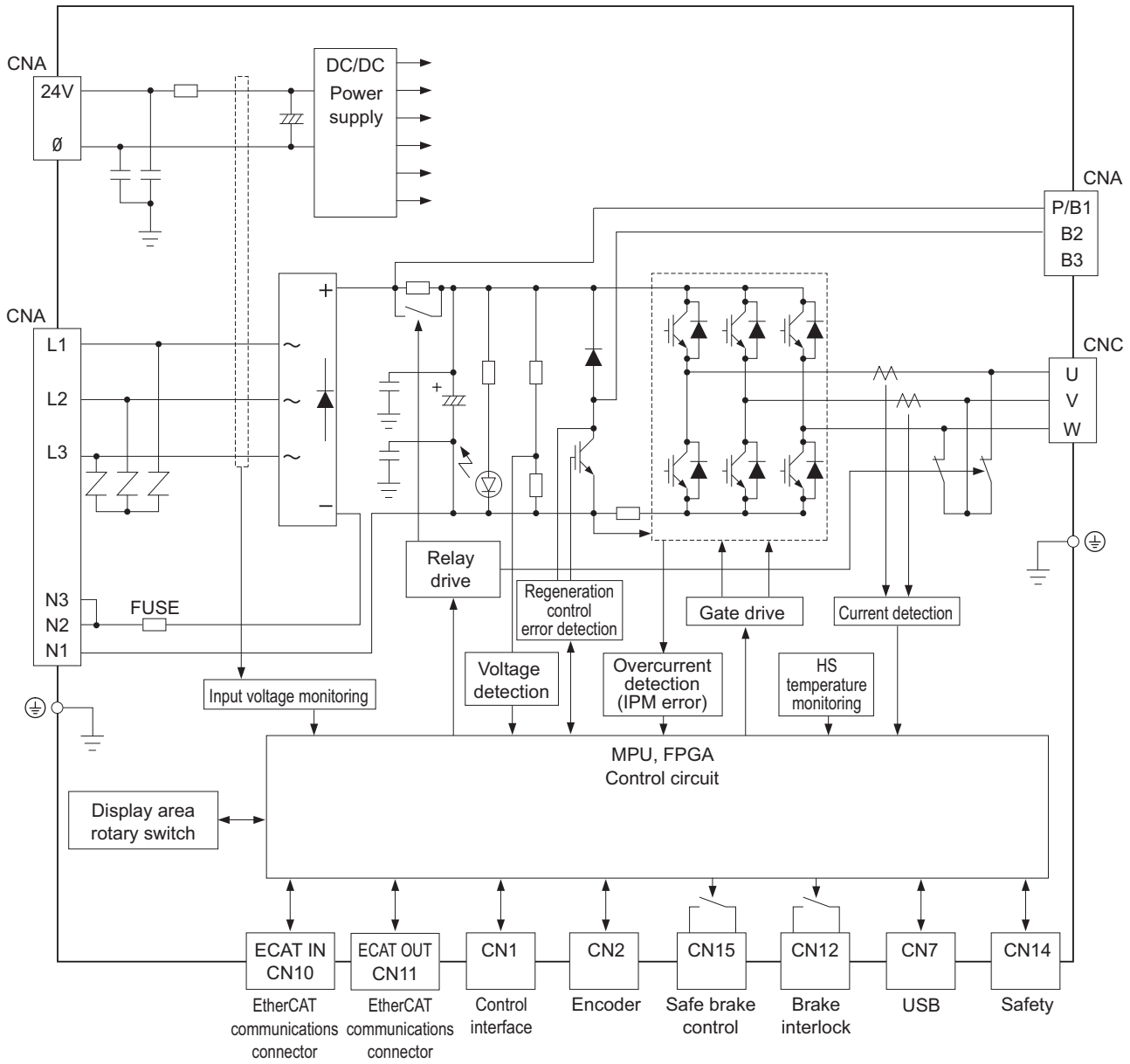

R88D-1SAN08H-ECT/-1SAN10H-ECT

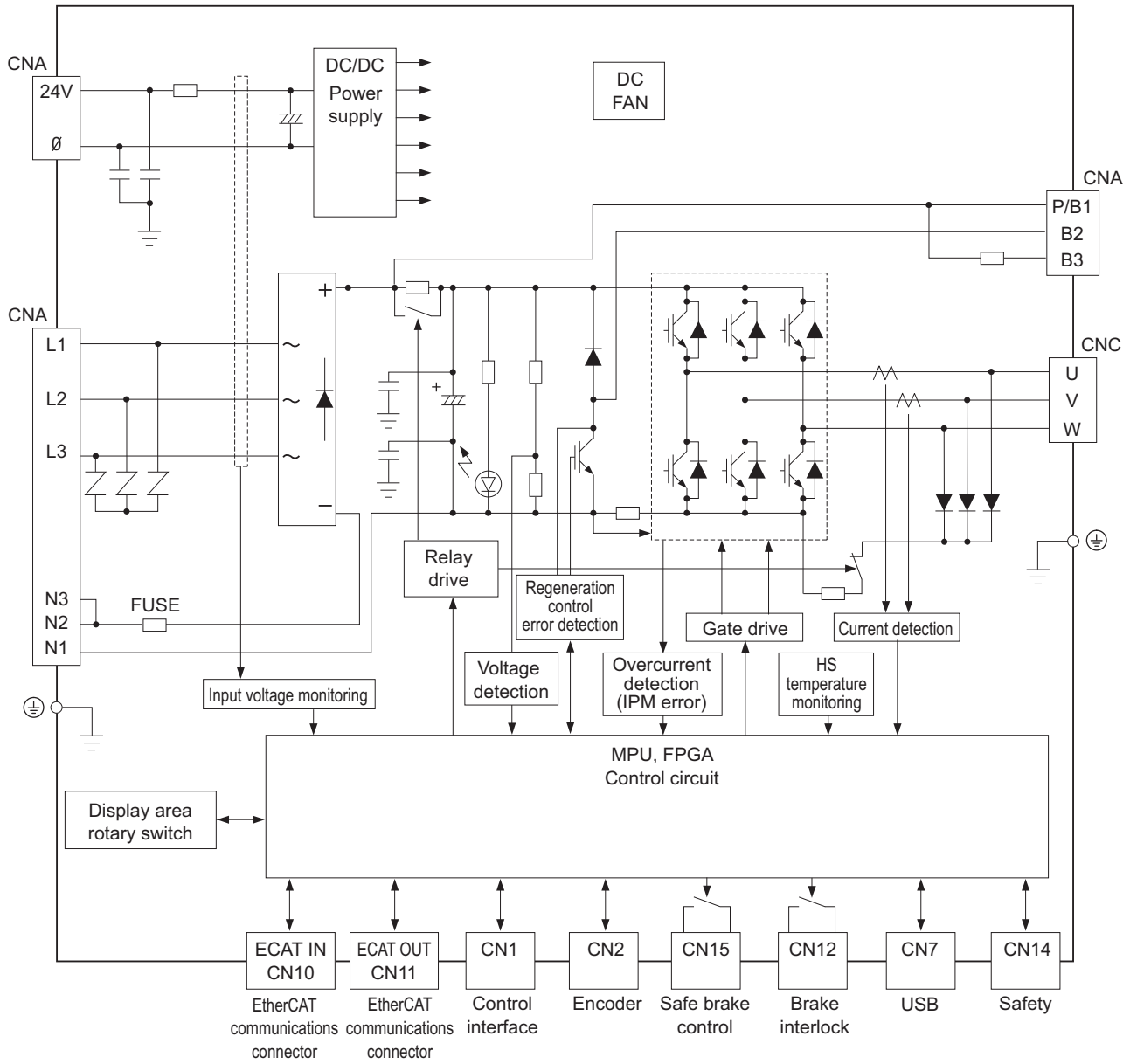

R88D-1SAN15H-ECT/-1SAN20H-ECT/-1SAN30H-ECT

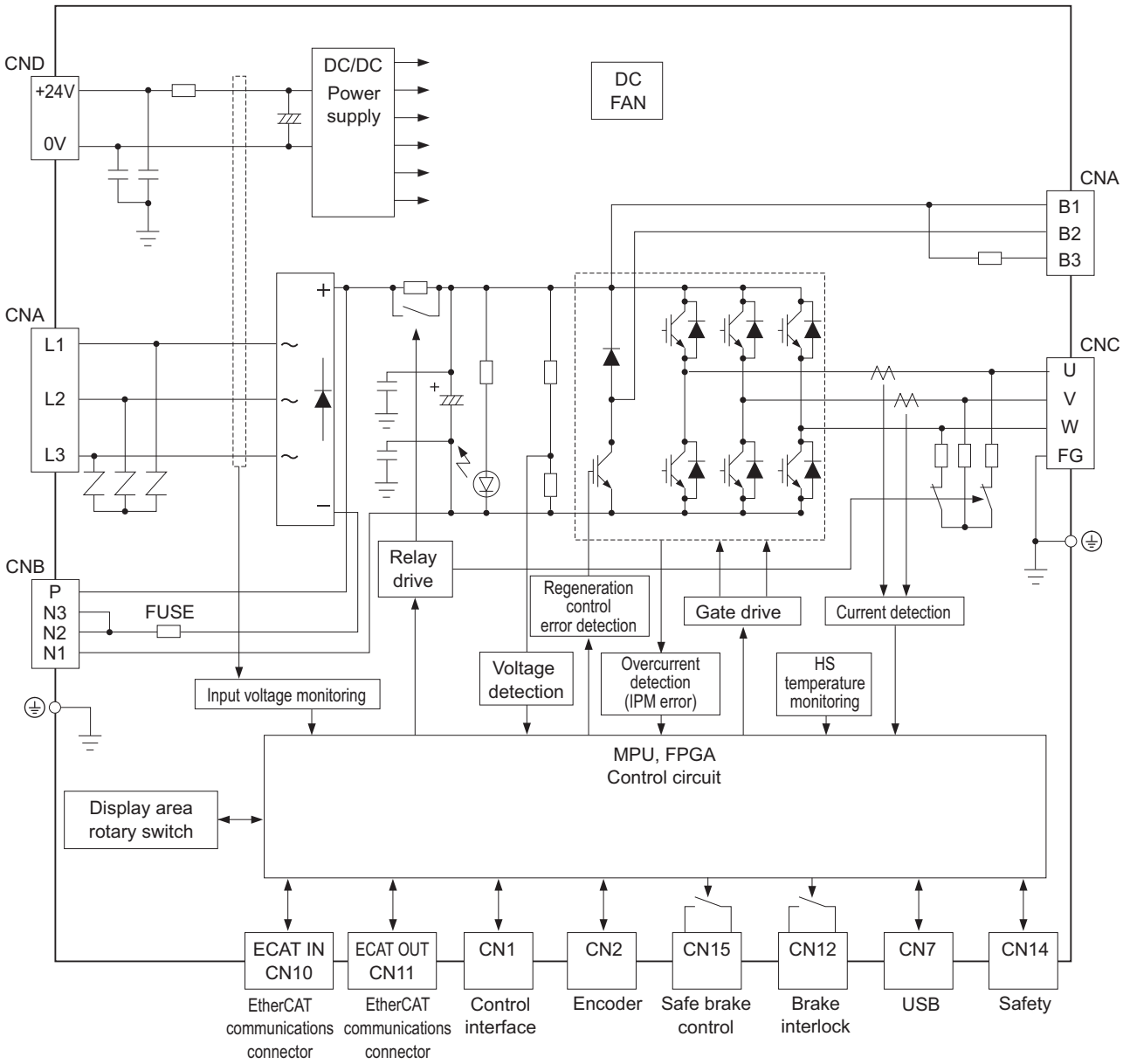

R88D-1SAN10F-ECT/-1SAN15F-ECT/-1SAN20F-ECT/-1SAN30F-ECT

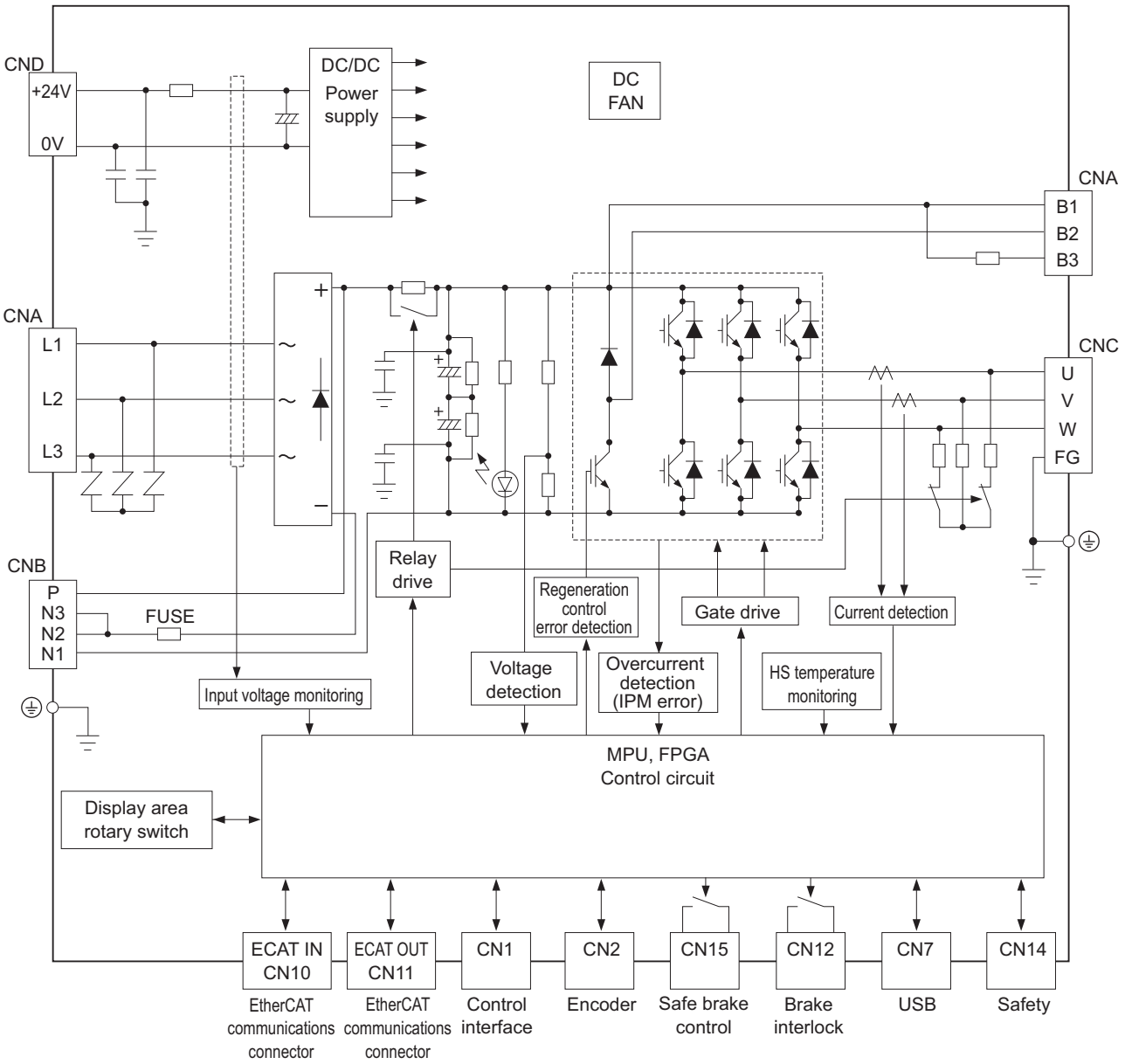

1-5 Applicable Standards

This section describes applicable standards.

1-5-1 EU Directives

The 1S-series Servo Drives/Servomotors Advance Type comply with the following EU directives.

EU Directives	Product	Applicable standards
EMC Directive	Servo Drives	EN61800-3 second environment, C3 Category
Low Voltage Directive	Servo Drives	EN61800-5-1
	Servomotors	EN 60034-1/-5
Machinery Directive	Servo Drives	EN ISO 13849-1 PLe/Cat.3 EN 61508 SIL3 EN 62061 SIL CL3 EN 61800-5-2 SIL3 (STO/SS1/SS2/SOS/SLS/SLP/SDI/SBC)

Note To conform to EMC Directives, install the Servo Drive and Servomotor under the conditions described in *4-3 Wiring Conforming to EMC Directives* on page 4-33.

The Servo Drives and Servomotors comply with EN 61800-5-1 as long as the following installation conditions (a) and (b) are met.

(a) Use the Servo Drive in pollution degree 2 or 1 environment as specified in IEC 60664-1.
Example: Installation inside an IP54 control panel.

(b) Be sure to connect a fuse or an equivalent that the fusing time is shorter, which complies with IEC 60269-1 CLASS gG, between the power supply and noise filter.
Select a fuse that satisfies the maximum current rating of the following table.

Servo Drive model	Maximum current rating
R88D-1SAN02H-ECT	16A
R88D-1SAN04H-ECT	16A
R88D-1SAN08H-ECT	16A
R88D-1SAN10H-ECT	16A
R88D-1SAN15H-ECT	40A
R88D-1SAN20H-ECT	40A
R88D-1SAN30H-ECT	40A
R88D-1SAN10F-ECT	20A
R88D-1SAN15F-ECT	20A
R88D-1SAN20F-ECT	20A
R88D-1SAN30F-ECT	20A

1-5-2 UL and cUL Standards

The 1S-series Servo Drives/Servomotors Advance Type conform to the following standards.

Standard	Product	Applicable standards	File number
UL standards	Servo Drives	UL 61800-5-1	E179149
	Servomotors	UL 1004-1, UL 1004-6	E331224
CSA standards*1	Servo Drives	CSA C22.2 No. 274	E179149
	Servomotors	CSA C22.2 No. 100	E331224

*1. IN CANADA, TRANSIENT SURGE SUPPRESSION SHALL BE INSTALLED ON THE LINE SIDE OF THIS EQUIPMENT AND SHALL BE RATED 277 V (PHASE TO GROUND), SUITABLE FOR OVERVOLTAGE CATEGORY III, AND SHALL PROVIDE PROTECTION FOR A RATED IMPULSE WITHSTAND VOLTAGE PEAK OF 6 KV

The Servo Drives and Servomotors comply with UL 61800-5-1 as long as the following installation conditions (a) and (b) are met.

(a) Use the Servo Drive in pollution degree 2 or 1 environment as specified in IEC 60664-1.
Example: Installation inside a control panel.

(b) Be sure to connect a fuse, which is a UL-listed product with LISTED, between the power supply and noise filter.
Select the fuse from the following table as well as an equivalent, or the fuse that belongs to the following class: CC, CF, GF, G, J, R or T.
Use copper wiring with a temperature rating of 75°C or higher.

Servo Drive model	CLASS	Voltage (Minimum)	Ampere
R88D-1SAN02H-ECT	RK5	240 V	15 A
R88D-1SAN04H-ECT	RK5	240 V	15 A
R88D-1SAN08H-ECT	RK5	240 V	15 A
R88D-1SAN10H-ECT	RK5	240 V	15 A
R88D-1SAN15H-ECT	RK5	240 V	40 A
R88D-1SAN20H-ECT	RK5	240 V	40 A
R88D-1SAN30H-ECT	RK5	240 V	40 A
R88D-1SAN10F-ECT	RK5	240 V	20 A
R88D-1SAN15F-ECT	RK5	240 V	20 A
R88D-1SAN20F-ECT	RK5	240 V	20 A
R88D-1SAN30F-ECT	RK5	240 V	20 A

Refer to *3-1-2 Characteristics* on page 3-4 for SCCR of the 1S-series Servo Drives/Servomotors Advance Type.

1-5-3 Korean Radio Regulations (KC)

- Observe the following precaution if you use this product in Korea.

  사용자안내문
  이 기기는 업무용 환경에서 사용할 목적으로 적합성평가를 받은 기기로서 가정용 환경에서 사용하는 경우 전파간섭의 우려가 있습니다.
  Guide for Users
  This equipment has been evaluated for conformity in a commercial environment.
  When used in a residential environment, it may cause radio interference.
- The 1S-series Servo Drives Advance Type comply with the Korean Radio Regulations (KC).
- The 1S-series Servomotors Advance Type are exempt from the Korean Radio Regulations (KC).

1-5-4 SEMI F47

- The main power supply inputs can conform to the SEMI F47 standard for momentary power interruptions (voltage sag immunity) for no-load operation.
- This standard applies to semiconductor manufacturing equipment.

Precautions for Correct Use

- This standard does not apply to the 24-VDC control power input. Use the power supply.
- Be sure to perform evaluation tests for SEMI F47 compliance in the entire machine and system.

1-5-5 Australian EMC Labeling Requirements (RCM)

- The 1S-series Servo Drives Advance Type comply with the Australian EMC Labeling Requirements (RCM).
- The 1S-series Servomotors Advance Type comply with the Australian EMC Labeling Requirements (RCM).

1-5-6 EAC Requirements

- The 1S-series Servo Drives Advance Type comply with the EAC requirements.
- The 1S-series Servomotors Advance Type comply with the EAC requirements.

1-6 Unit Versions

The 1S-series Servo Drive Advance Type uses unit versions.

Unit versions are used to manage differences in supported functions due to product upgrades, etc.

1-6-1 Confirmation Method

The unit version of 1S-series Servo Drive Advance Type is displayed at the location shown below.

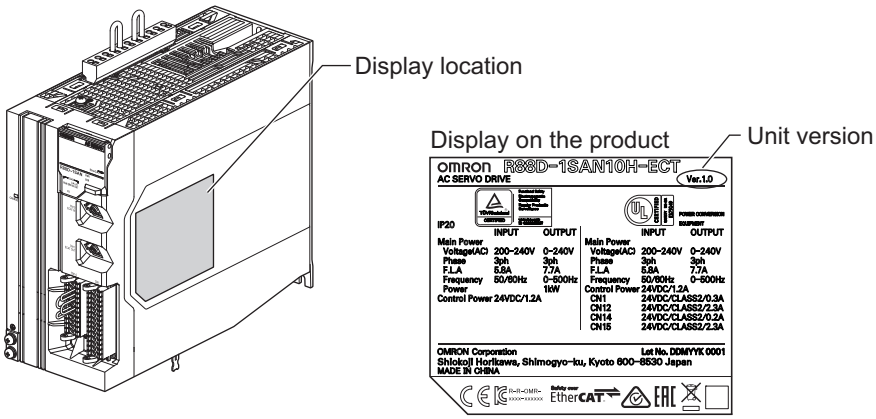

1-6-2 Unit Versions and Sysmac Studio Versions

Refer to *A-7 Version Information* on page A-239 for details on the relationship between the 1S-series Servo Drive Advance Type and Sysmac Studio versions.

1-7 Procedures to Start Operation

This section explains the procedures to operate a system that incorporates Servo Drives.

1-7-1 Overall Procedure

Use the following procedures to build a system that incorporates Servo Drives.

To use the Servo Drive safety function, you must build the standard control and safety control together.

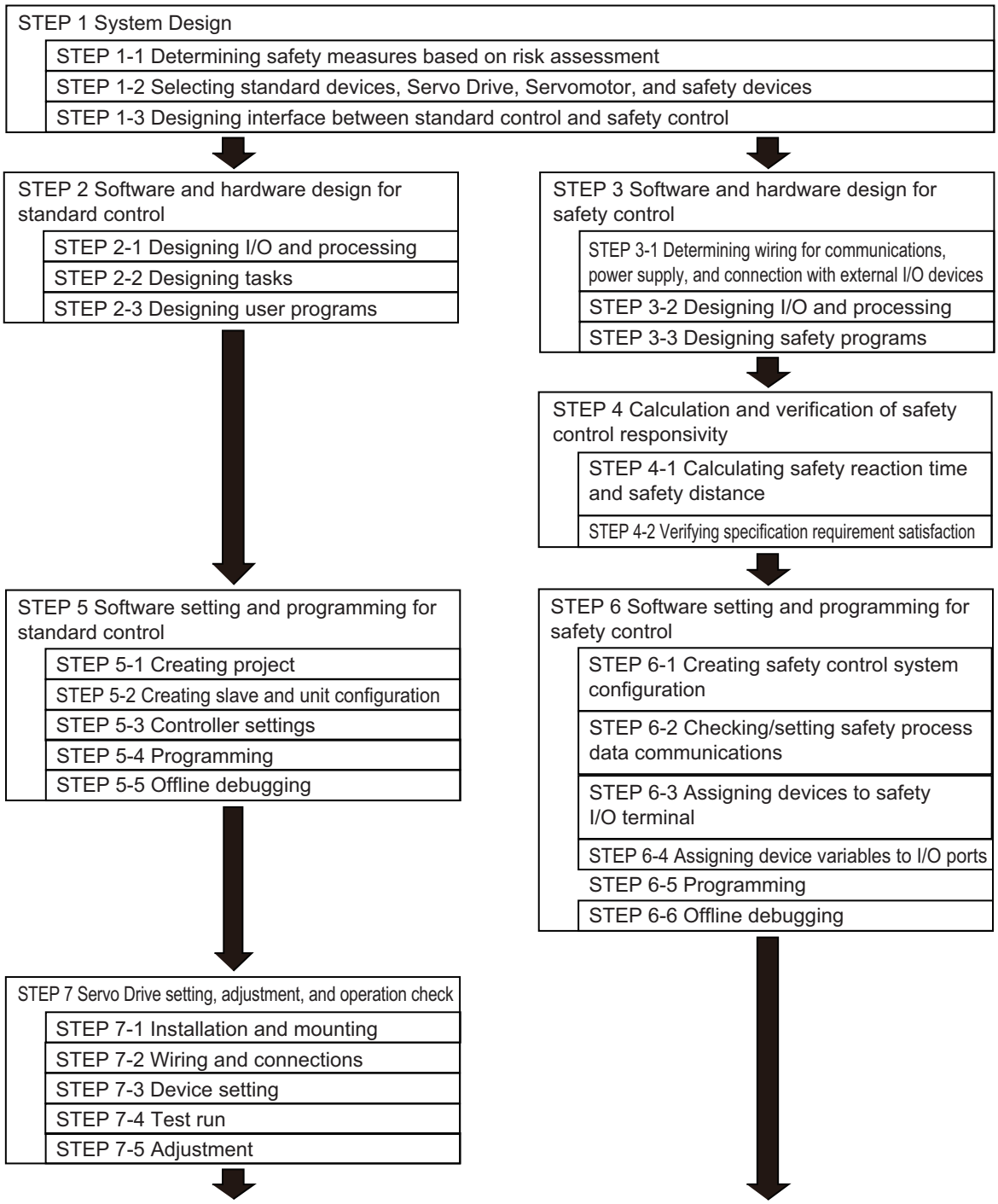

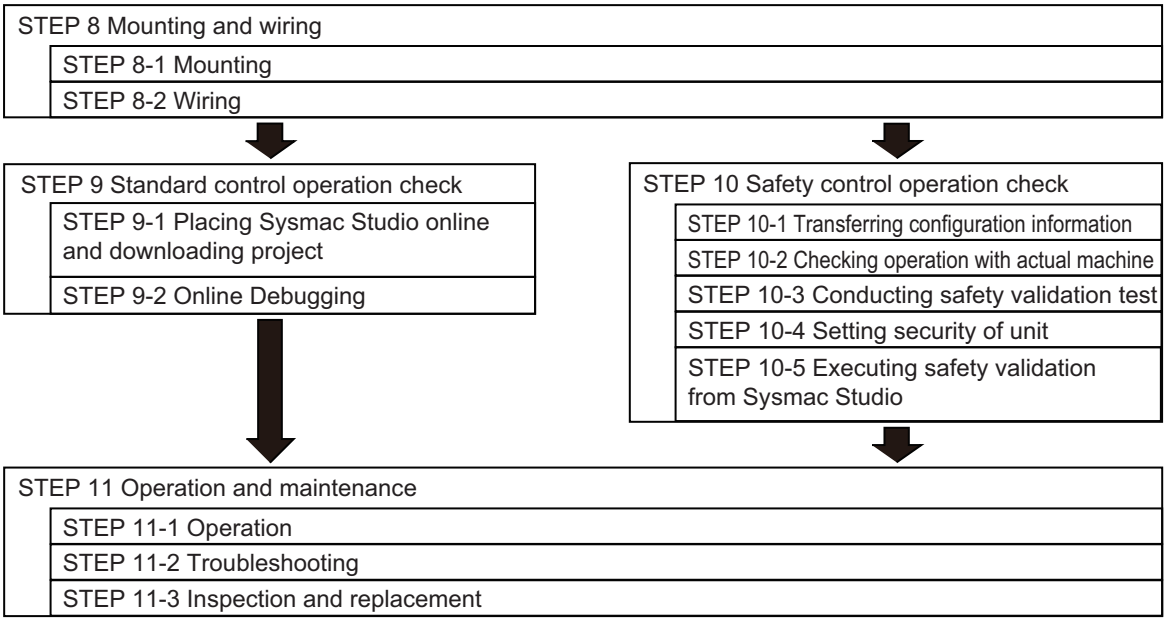
STEP 8 Mounting and wiring
STEP 8-1 Mounting
STEP 8-2 Wiring
STEP 9 Standard control operation check
STEP 9-1 Placing Sysmac Studio online and downloading project
STEP 9-2 Online Debugging
STEP 10 Safety control operation check
STEP 10-1 Transferring configuration information
STEP 10-2 Checking operation with actual machine
STEP 10-3 Conducting safety validation test
STEP 10-4 Setting security of unit
STEP 10-5 Executing safety validation from Sysmac Studio
STEP 11 Operation and maintenance
STEP 11-1 Operation
STEP 11-2 Troubleshooting
STEP 11-3 Inspection and replacement

1-7-2 Procedure Details

As described previously, the procedures for the standard control and safety control are performed in parallel.

This section explains the procedure details for using the Servo Drive safety function.

If you use an NJ/NX-series CPU Unit to perform the standard control, refer to *NJ/NX-series CPU Unit Software User's Manual* (Cat. No. W501) together with this manual.

If you use an NX-series Safety Control Unit to perform the safety control, refer to *NX-series Safety Control Unit User's Manual* (Cat. No. Z930) together with this manual.

STEP 1 System Design		
Procedure	**Description**	**Reference**
STEP 1-1 Determining safety measures based on risk assessment	• Identify the source of danger and perform the risk assessment (estimation and evaluation). • Consider and determine the measures for risk minimization.	
↓		
STEP 1-2 Selecting standard device, Servo Drive, Servomotor, and safety device	• Select the device that configures inputs, logics, and outputs for standard control. • Select the Servo Drive and Servomotor. • Select the safety device used to configure inputs, logics, and outputs for safety control.	Manuals for each unit
↓		
STEP 1-3 Designing interface between standard control and safety control	Design the interface between the standard control and safety control.	• Safety Control Unit User's Manual • Section 8, 8-1-2

STEP 2 Software and Hardware Design for Standard Control		
Procedure	**Description**	**Reference**
STEP 2-1 Designing I/O and processing	Design I/O and processing. • External I/O devices and unit configuration • Refresh periods for external devices • Program contents	NJ/NX-series CPU Unit User's Manuals
↓		
STEP 2-2 Designing tasks	Design the tasks. • Task configuration • Relationship between tasks and programs • Task periods • Slave and Unit refresh times • Exclusive control methods for variables between tasks	NJ/NX-series CPU Unit User's Manuals
↓		
STEP 2-3 Designing user programs	• Design POUs (Program Organization Unit). • Design variables.	NJ/NX-series CPU Unit User's Manuals

STEP 3 Software and Hardware Design for Safety Control		
Procedure	**Description**	**Reference**
STEP 3-1 Determining wiring for communications, power supply, and connection with external I/O devices	Determine wiring used for the communication network, power supply, and safety I/O devices.	Safety Control Unit User's Manual
STEP 3-2 Designing I/O and processing	Design the configuration of the safety I/O devices and Safety I/O Unit. • Safety I/O devices • Program contents	• Safety Control Unit User's Manual • Section 8
STEP 3-3 Designing safety programs	Design POUs (Program Organization Unit). • Programs • Function blocks	• Safety Control Unit User's Manual • Section 8

STEP 4 Calculation and Verification of Safety Control Responsivity		
Procedure	**Description**	**Reference**
STEP 4-1 Calculating safety reaction time and safety distance	Calculate the safety reaction time and then determine the safety distance.	• Safety Control Unit User's Manual • Section 8
STEP 4-2 Verifying specification requirement satisfaction	Verify whether the specification requirements are satisfied. If not, reconsider the system design.	Safety Control Unit User's Manual

STEP 5 Software Design and Programming for Standard Control		
Procedure	**Description**	**Reference**
STEP 5-1 Creating project	• Create a new project in the Sysmac Studio. • Insert a Controller.	NJ/NX-series CPU Unit User's Manuals
STEP 5-2 Creating slave and unit configuration	• Create the slave configuration and Unit configuration either offline or online. • Include the safety PDOs (1610 hex and 1A10 hex) in PDO mapping for the Servo Drive. • Register the device variables in the variable table. • Create the axes and set them as real axes or virtual axes. Create axes groups to perform interpolated axes control.	• NJ/NX-series CPU Unit User's Manuals • Section 8, 8-1
STEP 5-3 Controller settings	Set PLC Function Modules, Motion Control Function Modules, etc. in the Sysmac Studio.	NJ/NX-series CPU Unit User's Manuals

STEP 5 Software Design and Programming for Standard Control		
Procedure	**Description**	**Reference**
STEP 5-4 Programming	• Register variables in the Sysmac Studio. • Write the algorithms for the POUs (programs, function blocks, and functions) in the required languages. • Make task settings.	NJ/NX-series CPU Unit User's Manuals
STEP 5-5 Offline Debugging	Check the algorithms and task execution times on the Simulator (virtual controller).	NJ/NX-series CPU Unit User's Manuals

STEP 6 Software Design and Programming for Safety Control		
Procedure	**Description**	**Reference**
STEP 6-1 Creating safety control system configuration	Arrange the Communications Coupler Unit, Safety CPU Unit, and Safety I/O Unit in the Sysmac Studio.	Safety Control Unit User's Manual
STEP 6-2 Checking/setting Safety Process Data Communications	• Select Safety Controller from the Controller Selection Box in the Sysmac Studio. • Check or change the settings of Safety Process Data Communications. • Make sure that the Servo Drive is displayed, and then select the Active check box. • Select safety functions for use of the assigned safety PDOs (1610 hex and 1A10 hex). • Set parameters of each safety function for use.	• Safety Control Unit User's Manual • Section 8
STEP 6-3 Assigning devices to safety I/O terminal	In the parameter setting view for the Safety I/O Unit, select the safety I/O devices connected to the safety I/O terminal.	Safety Control Unit User's Manual
STEP 6-4 Assigning device variables to I/O ports	Register the device variables in the variable table. (Variable names are user defined or automatically created.)	Safety Control Unit User's Manual
STEP 6-5 Programming	• Register the variables used by more than one POU in the global variable table with the Sysmac Studio. • Register the variables in the local variable table for each program. • Register the variables in the local variable table for each function block. • Write the algorithms for the POUs (programs and function blocks) in FBD language.	• Safety Control Unit User's Manual • Section 8
STEP 6-6 Offline Debugging	Execute program debugging with the Simulator.	Safety Control Unit User's Manual

STEP 7 Servo Drive Setting, Adjustment, and Operation Check		
Procedure	**Description**	**Reference**
STEP 7-1 **Installation and mounting**	Install the Servomotor and Servo Drive according to the installation conditions. Do not connect the Servomotor to mechanical systems before checking the operation without any load.	Section 4, 4-1
STEP 7-2 **Wiring and connections**	Connect the Servomotor and Servo Drive to the power supply and peripheral equipment. Satisfy specified installation and wiring conditions, particularly for models that conforms to the EU Directives.	Section 4, 4-2
STEP 7-3 **Device setting**	Set the objects related to the functions required for application conditions.	Section 9
STEP 7-4 **Test run**	• First, check motor operation without any load. Then turn the power supply OFF and connect the Servomotor to mechanical systems. • Use the STO function via safety input signals if you need the STO function while you perform the test run or adjustment using the Servo Drive with no load.	Section 10, 10-3
STEP 7-5 **Adjustment**	Manually adjust the gain if necessary.	Section 11

STEP 8 Mounting and Wiring		
Procedure	**Description**	**Reference**
STEP 8-1 **Mounting**	Install each unit according to the installation conditions.	Manuals for each unit
STEP 8-2 **Wiring**	Connect the network cables and wire the I/O.	Manuals for each unit

STEP 9 Standard Control Operation Check		
Procedure	**Description**	**Reference**
STEP 9-1 **Placing Sysmac Studio online and downloading project**	• Turn ON the power supply to the Controller and place the Sysmac Studio online. • Download the project.	NJ/NX-series CPU Unit User's Manuals
STEP 9-2 **Online Debugging**	• Check the wiring by using forced refreshing of real I/O from the I/O Map or Watch Tab Page. • For motion control, use the MC Test Run operations in PROGRAM mode to check the wiring. Then check the motor rotation directions for jogging, travel distances for relative positioning (e.g., for electronic gear settings), and homing operation. • Change the Controller to RUN mode and check the operation of the user program.	NJ/NX-series CPU Unit User's Manuals

STEP 10 Safety Control Operation Check		
Procedure	**Description**	**Reference**
STEP 10-1 Transferring configuration information	• Connect the computer (Sysmac Studio) to the NJ/NX-series CPU Unit. • Download the project data to the CPU Unit. • In the Safety CPU Unit Setup and Programming View, change the mode of the Safety CPU Unit to DEBUG mode. By doing this, the safety application data is transferred to the Safety CPU Unit and the test run for debugging is enabled.	• NJ/NX-series CPU Unit User's Manuals • Safety Control Unit User's Manual
STEP 10-2 Checking operation with actual machine	Perform the wiring check and program operation check to confirm that the Safety Control Unit operates as intended.	Safety Control Unit User's Manual
STEP 10-3 Conducting safety validation test	Conduct the test to check whether all safety functions operate as designed.	Safety Control Unit User's Manual
STEP 10-4 Setting security of unit	Set the safety password.	Safety Control Unit User's Manual
STEP 10-5 Executing safety validation from Sysmac Studio	If the safety validation test is completed successfully, then execute the safety validation command from Sysmac Studio. By doing this, the safety application data is transferred to the non-volatile memory in the Safety CPU Unit, and the operation-ready status is established.	Safety Control Unit User's Manual

STEP 11 Operation and Maintenance		
Procedure	**Description**	**Reference**
STEP 11-1 Operation	Start actual operation. Start actual operation after checking the present device position and the position displayed on the Servo Drives are appropriate.	---
STEP 11-2 Troubleshooting	In case of an error, use the troubleshooting function of the Sysmac Studio to check the error and identify its cause, and then remove the cause of the error.	• Section 9 • Manuals for each unit
STEP11-3 Inspection and replacement	Perform periodic maintenance. If any defect is found during inspection, replace the device.	• Section 10 • Manuals for each unit

2

Models and External Dimensions

This section explains the models of Servo Drives, Servomotors, Decelerators, and peripheral devices, and provides the external dimensions and mounting dimensions.

2-1 Servo System Configuration 2-2

2-2 How to Read Model Numbers 2-4

2-2-1 Servo Drive 2-4
2-2-2 Servomotor 2-5
2-2-3 Integrated Cable 2-6
2-2-4 Decelerator 2-7

2-3 Model Tables 2-9

2-3-1 Servo Drive Model Table 2-9
2-3-2 Servomotor Model Tables 2-10
2-3-3 Servo Drive and Servomotor Combination Tables 2-12
2-3-4 Decelerator Model Tables 2-13
2-3-5 Servomotor and Decelerator Combination Tables 2-15
2-3-6 Table of Integrated Cables, Connectors, and Shield Clamps 2-16
2-3-7 External Regeneration Resistor and External Regeneration Resistance Unit Model Tables 2-19
2-3-8 Reactor Model Table 2-20

2-4 External and Mounting Dimensions 2-21

2-4-1 Servo Drive Dimensions 2-21
2-4-2 Servomotor Dimensions 2-23
2-4-3 Cable Outlet Direction of Integrated Connector 2-43
2-4-4 Cable Wiring Dimension for a Case of Servomotor Installing 2-44
2-4-5 Decelerator Dimensions 2-46
2-4-6 Dimensions of External Regeneration Resistors and External Regeneration Resistance Units 2-55
2-4-7 Reactor Dimensions 2-56
2-4-8 Noise Filter Dimensions 2-62

2-1 Servo System Configuration

This section shows the Servo system configuration that consists of Controllers, Servo Drives, Servomotors, Decelerators, and other devices.

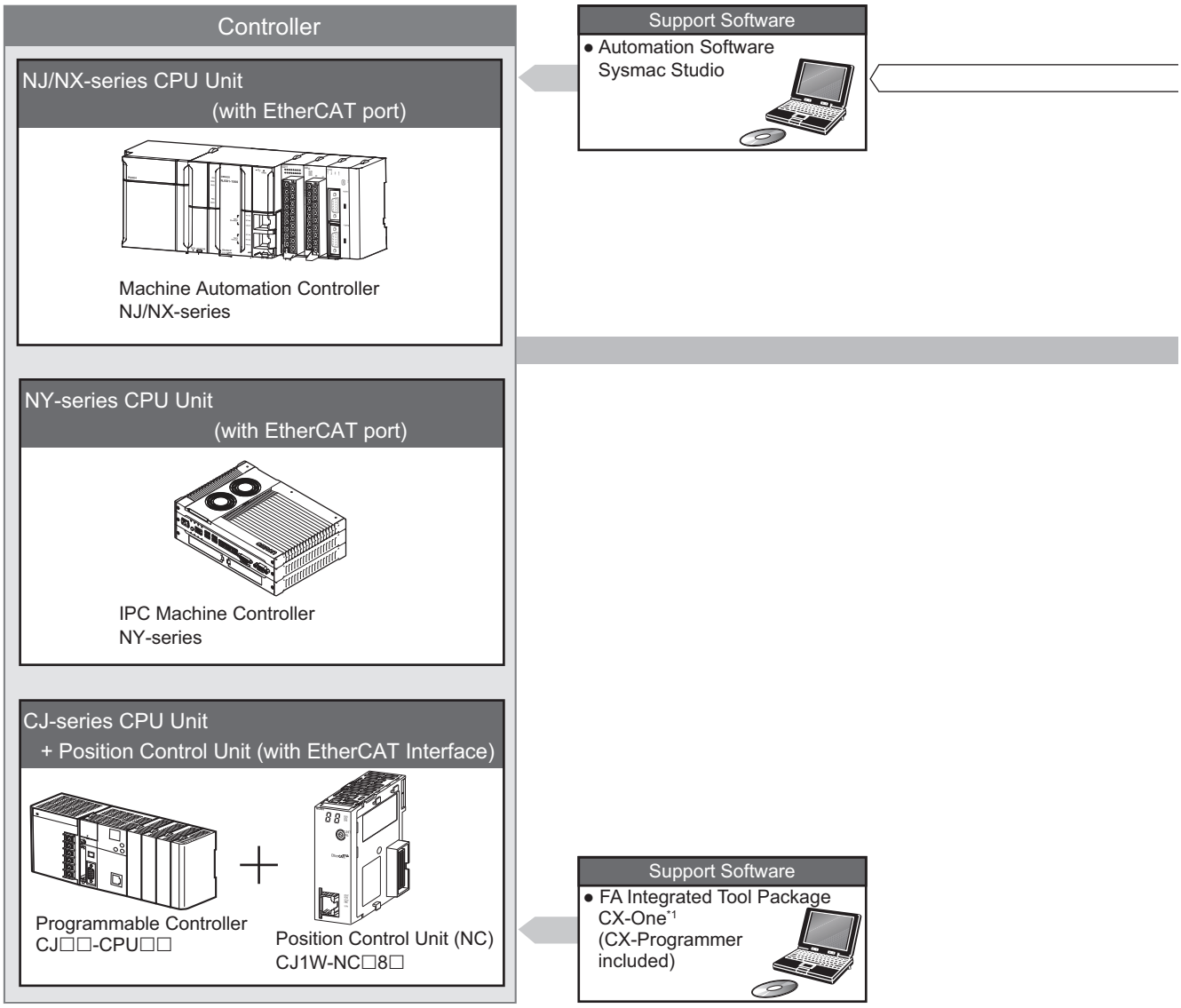

*1. You cannot use the CX-One to make the settings of 1S-series Servo Drives Advance Type. Obtain the Sysmac Studio.

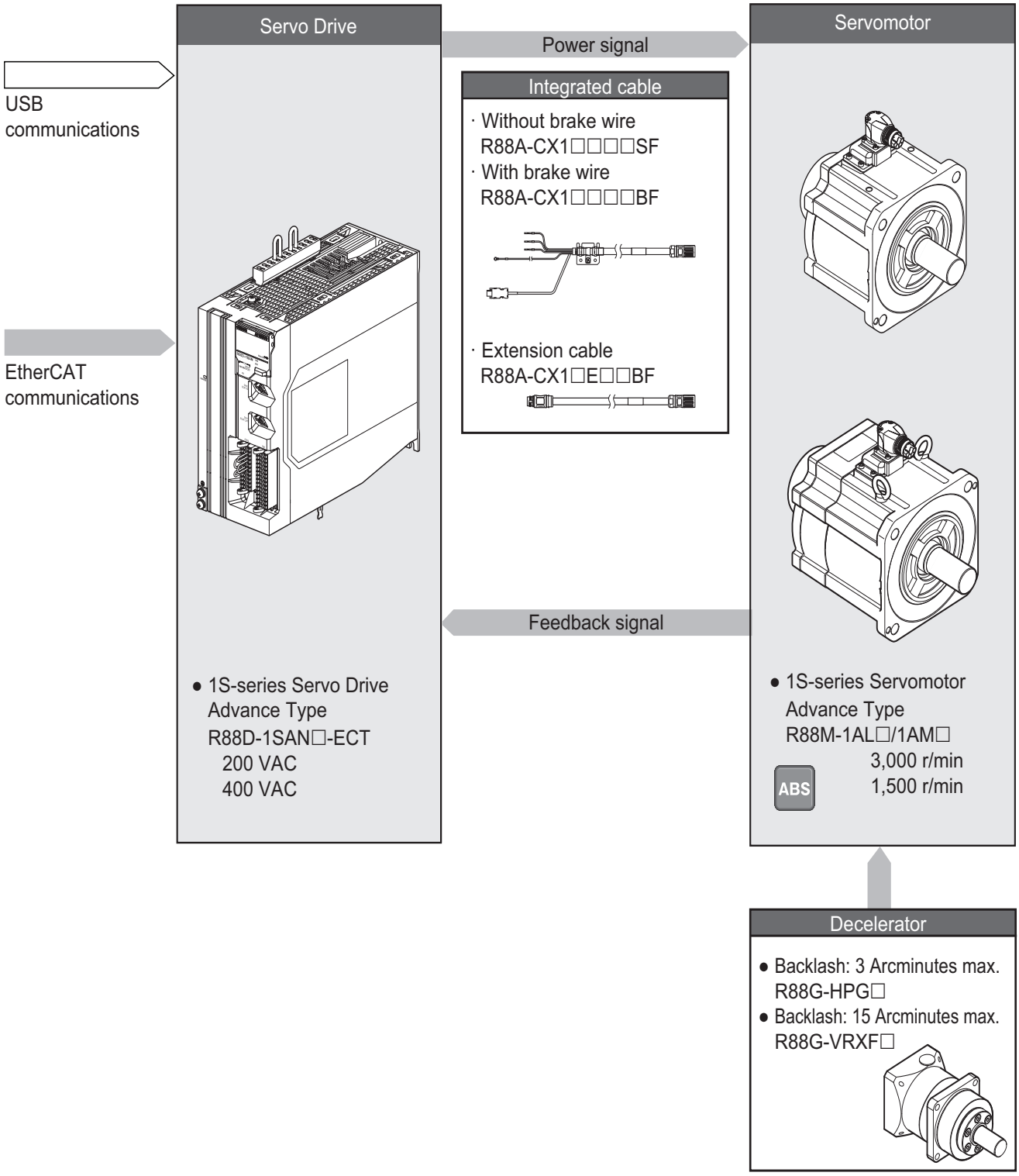
Servo Drive
Power signal
Servomotor
USB communications
Integrated cable
· Without brake wire
R88A-CX1□□□□SF
· With brake wire
R88A-CX1□□□□BF
EtherCAT communications
· Extension cable
R88A-CX1□E□□BF
Feedback signal
● 1S-series Servo Drive
Advance Type
R88D-1SAN□-ECT
200 VAC
400 VAC
● 1S-series Servomotor
Advance Type
R88M-1AL□/1AM□
3,000 r/min
1,500 r/min
ABS
Decelerator
● Backlash: 3 Arcminutes max.
R88G-HPG□
● Backlash: 15 Arcminutes max.
R88G-VRXF□

2-2 How to Read Model Numbers

This section describes how to read and understand the model numbers of Servo Drives, Servomotors, Integrated Cables, and Decelerators.

2-2-1 Servo Drive

The Servo Drive model number shows the Servo Drive type, applicable Servomotor, power supply voltage, etc.

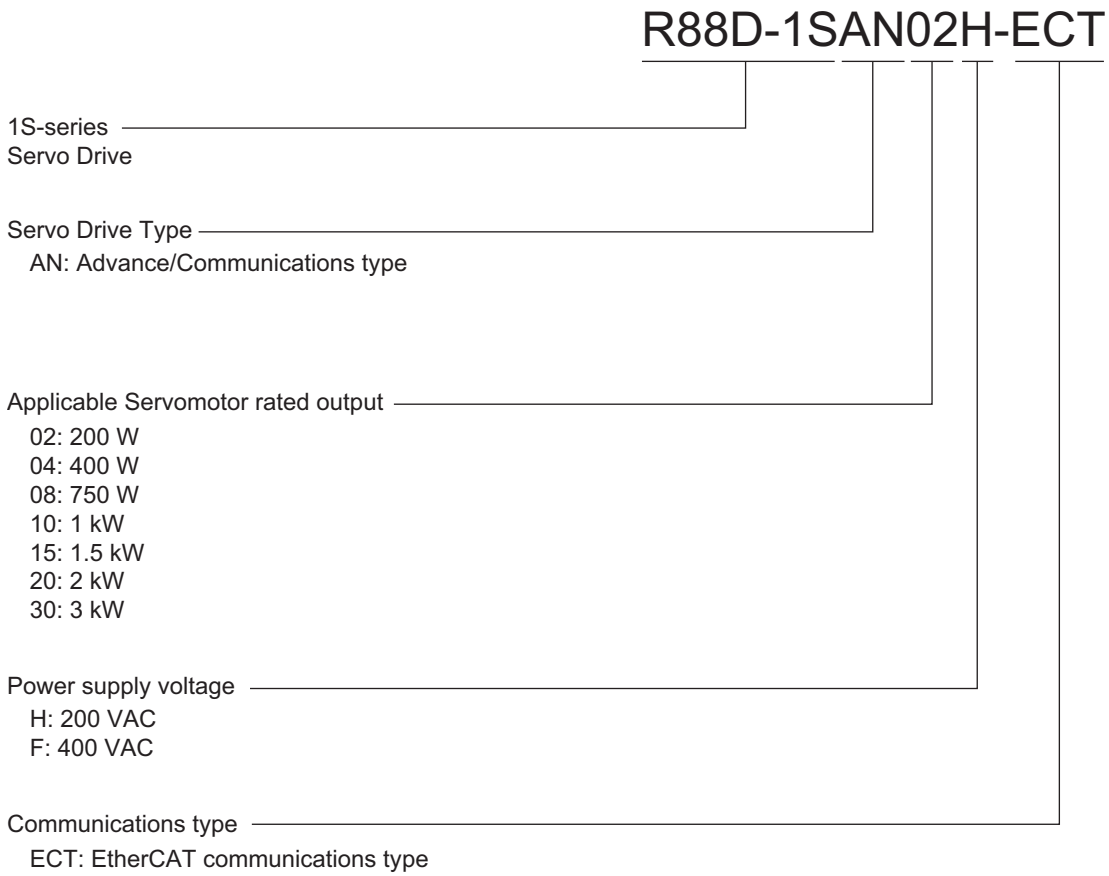

2-2-2 Servomotor

The Servomotor model number tells the Servomotor type, rated output, rated rotation speed, voltage, etc.

R88M-1AM20030T-BOS2

1S-series Servomotor

Servomotor type
- AL: Advance/Low-inertia type
- AM: Advance/Middle-inertia type

Rated output
- 200: 200 W
- 400: 400 W
- 750: 750 W
- 1K0: 1 kW
- 1K5: 1.5 kW
- 2K0: 2 kW
- 2K6: 2.6 kW
- 2K7: 2.7 kW
- 3K0: 3 kW

Rated rotation speed
- 15: 1,500 r/min
- 30: 3,000 r/min

Servo Drive main power supply voltage and encoder type
- T: 200 VAC absolute encoder
- C: 400 VAC absolute encoder

Options

Brake
- None: Without brake
- B: With 24-VDC brake

Oil seal
- None: Without oil seal
- O: With oil seal

Key and tap
- None: Straight shaft
- S2: With key and tap

Combinations of Options

	Without oil seal		With oil seal	
	Straight shaft	With key and tap	Straight shaft	With key and tap
Without brake	None	-S2	-O	-OS2
With brake	-B	-BS2	-BO	-BOS2

2-2-3 Integrated Cable

The cable model number tells the cable type, cable length, connector type, etc.

R88A-CX1A003BF

Peripheral for the 1S-series

Peripheral type
CX1: Integrated Cable

Applicable Servomotor type

A:	200 VAC	3,000-r/min Servomotor 200 W, 400 W, 750 W
B:	200 VAC	3,000-r/min Servomotor 1 kW
C:	200 VAC	3,000-r/min Servomotor 1.5 kW
		1,500-r/min Servomotor 1.5 kW
	400 VAC	3,000-r/min Servomotor 750 kW, 1 kW, 1.5 kW, 2 kW, 3 kW
		1,500-r/min Servomotor 1.5 kW, 3 kW
D:	200 VAC	3,000-r/min Servomotor 2 kW, 2.6 kW
		1,500-r/min Servomotor 2.7 kW

Cable length
003: 3 m
005: 5 m
010: 10 m
015: 15 m
020: 20 m
E10: 10 m (Extension cable)
E20: 20 m (Extension cable)

Connector type
S: Without brake wire
B: With brake wire

Application
F: Flexible cable

2-2-4 Decelerator

The Decelerator model number tells the Decelerator series, flange size number, reduction ratio, backlash, etc.

Backlash: 3 Arcminutes Max.

R88G-HPG32A112K0SBJ

Decelerator for Servomotor
Backlash: 3 Arcminutes max.

Flange size number
14A: 60×60
20A: 90×90
32A: 120×120
50A: 170×170
65A: 230×230

Reduction ratio
05: 1/5
11: 1/11
20: 1/20
21: 1/21
25: 1/25
33: 1/33
45: 1/45

Applicable Servomotor rated output *1
200: 200 W
400: 400 W
600: 600 W
750: 750 W
900: 900 W
1K5: 1.5 kW
2K0: 2 kW
3K0: 3 kW
5K0: 5 kW

Servomotor type *1
None: 3,000-r/min Servomotors
S: 2,000-r/min Servomotors
T: 1,000-r/min Servomotors

Backlash
B: Backlash: 3 Arcminutes max.

Options
None: Straight shaft
J: With key and tap

*1. This is a standard model number of servo motor; this model number structure can be applied to other motors. Confirm decelerator and servomotor combination table when you select a Servomotor.

Backlash: 15 Arcminutes Max.

R88G-VRXF05B200CJ

Decelerator for Servomotor
- Backlash: 15 Arcminutes Max.

Reduction ratio
- 05: 1/5
- 09: 1/9
- 15: 1/15
- 25: 1/25

Flange size number
- B: 52×52
- C: 78×78
- D: 98×98

Applicable Servomotor rated output
- 200: 200 W
- 400: 400 W
- 750: 750 W

Backlash
- C: Backlash: 15 Arcminutes max.

Options
- J: With key and tap

2-3 Model Tables

This section lists the models of Servo Drives, Servomotors, Decelerators, cables, connectors, peripheral devices, etc. in the tables.

2-3-1 Servo Drive Model Table

The following table lists the Servo Drive models.

Specifications		Model	Reference
Single-phase/3-phase 200 VAC	200 W	R88D-1SAN02H-ECT	P. 2-21
	400 W	R88D-1SAN04H-ECT	
	750 W	R88D-1SAN08H-ECT	
	1.5 kW	R88D-1SAN15H-ECT	P. 2-22
3-phase 200 VAC	1 kW	R88D-1SAN10H-ECT	P. 2-21
	2 kW	R88D-1SAN20H-ECT	P. 2-22
	3 kW	R88D-1SAN30H-ECT	
3-phase 400 VAC	1 kW	R88D-1SAN10F-ECT	
	1.5 kW	R88D-1SAN15F-ECT	
	2 kW	R88D-1SAN20F-ECT	
	3 kW	R88D-1SAN30F-ECT	

2-3-2 Servomotor Model Tables

The following tables list the Servomotor models by the rated motor speed.

3,000-r/min Servomotors

Specifications			Model				Reference
			Without oil seal		With oil seal		
			Straight shaft	With key and tap	Straight shaft	With key and tap	
Without brake	200 VAC	200 W	R88M-1AM20030T	R88M-1AM20030T-S2	R88M-1AM20030T-O	R88M-1AM20030T-OS2	P. 2-23
		400 W	R88M-1AM40030T	R88M-1AM40030T-S2	R88M-1AM40030T-O	R88M-1AM40030T-OS2	P. 2-23
		750 W	R88M-1AM75030T	R88M-1AM75030T-S2	R88M-1AM75030T-O	R88M-1AM75030T-OS2	P. 2-27
		1 kW	R88M-1AL1K030T	R88M-1AL1K030T-S2	R88M-1AL1K030T-O	R88M-1AL1K030T-OS2	P. 2-29
		1.5 kW	R88M-1AL1K530T	R88M-1AL1K530T-S2	R88M-1AL1K530T-O	R88M-1AL1K530T-OS2	P. 2-29
		2 kW	R88M-1AL2K030T	R88M-1AL2K030T-S2	R88M-1AL2K030T-O	R88M-1AL2K030T-OS2	P. 2-29
		2.6 kW	R88M-1AL2K630T	R88M-1AL2K630T-S2	R88M-1AL2K630T-O	R88M-1AL2K630T-OS2	P. 2-31
	400 VAC	750 W	R88M-1AL75030C	R88M-1AL75030C-S2	R88M-1AL75030C-O	R88M-1AL75030C-OS2	P. 2-33
		1 kW	R88M-1AL1K030C	R88M-1AL1K030C-S2	R88M-1AL1K030C-O	R88M-1AL1K030C-OS2	P. 2-33
		1.5 kW	R88M-1AL1K530C	R88M-1AL1K530C-S2	R88M-1AL1K530C-O	R88M-1AL1K530C-OS2	P. 2-33
		2 kW	R88M-1AL2K030C	R88M-1AL2K030C-S2	R88M-1AL2K030C-O	R88M-1AL2K030C-OS2	P. 2-33
		3 kW	R88M-1AL3K030C	R88M-1AL3K030C-S2	R88M-1AL3K030C-O	R88M-1AL3K030C-OS2	P. 2-37

Specifications			Model				Reference
			Without oil seal		With oil seal		
			Straight shaft	With key and tap	Straight shaft	With key and tap	
With brake	200 VAC	200 W	R88M-1AM20030T-B	R88M-1AM20030T-BS2	R88M-1AM20030T-BO	R88M-1AM20030T-BOS2	P. 2-25
		400 W	R88M-1AM40030T-B	R88M-1AM40030T-BS2	R88M-1AM40030T-BO	R88M-1AM40030T-BOS2	P. 2-25
		750 W	R88M-1AM75030T-B	R88M-1AM75030T-BS2	R88M-1AM75030T-BO	R88M-1AM75030T-BOS2	P. 2-28
		1 kW	R88M-1AL1K030T-B	R88M-1AL1K030T-BS2	R88M-1AL1K030T-BO	R88M-1AL1K030T-BOS2	P. 2-30
		1.5 kW	R88M-1AL1K530T-B	R88M-1AL1K530T-BS2	R88M-1AL1K530T-BO	R88M-1AL1K530T-BOS2	P. 2-30
		2 kW	R88M-1AL2K030T-B	R88M-1AL2K030T-BS2	R88M-1AL2K030T-BO	R88M-1AL2K030T-BOS2	P. 2-30
		2.6 kW	R88M-1AL2K630T-B	R88M-1AL2K630T-BS2	R88M-1AL2K630T-BO	R88M-1AL2K630T-BOS2	P. 2-32
	400 VAC	750 W	R88M-1AL75030C-B	R88M-1AL75030C-BS2	R88M-1AL75030C-BO	R88M-1AL75030C-BOS2	P. 2-35
		1 kW	R88M-1AL1K030C-B	R88M-1AL1K030C-BS2	R88M-1AL1K030C-BO	R88M-1AL1K030C-BOS2	P. 2-35
		1.5 kW	R88M-1AL1K530C-B	R88M-1AL1K530C-BS2	R88M-1AL1K530C-BO	R88M-1AL1K530C-BOS2	P. 2-35
		2 kW	R88M-1AL2K030C-B	R88M-1AL2K030C-BS2	R88M-1AL2K030C-BO	R88M-1AL2K030C-BOS2	P. 2-35
		3 kW	R88M-1AL3K030C-B	R88M-1AL3K030C-BS2	R88M-1AL3K030C-BO	R88M-1AL3K030C-BOS2	P. 2-38

1,500-r/min Servomotors

Specifications			Model				Reference
			Without oil seal		With oil seal		
			Straight shaft	With key and tap	Straight shaft	With key and tap	
Without brake	200 VAC	1.5 kW	R88M-1AM1K515T	R88M-1AM1K515T-S2	R88M-1AM1K515T-O	R88M-1AM1K515T-OS2	P. 2-39
		2.7 kW	R88M-1AM2K715T	R88M-1AM2K715T-S2	R88M-1AM2K715T-O	R88M-1AM2K715T-OS2	P. 2-41
	400 VAC	1.5 kW	R88M-1AM1K515C	R88M-1AM1K515C-S2	R88M-1AM1K515C-O	R88M-1AM1K515C-OS2	P. 2-39
		3 kW	R88M-1AM3K015C	R88M-1AM3K015C-S2	R88M-1AM3K015C-O	R88M-1AM3K015C-OS2	P. 2-41
With brake	200 VAC	1.5 kW	R88M-1AM1K515T-B	R88M-1AM1K515T-BS2	R88M-1AM1K515T-BO	R88M-1AM1K515T-BOS2	P. 2-40
		2.7 kW	R88M-1AM2K715T-B	R88M-1AM2K715T-BS2	R88M-1AM2K715T-BO	R88M-1AM2K715T-BOS2	P. 2-42
	400 VAC	1.5 kW	R88M-1AM1K515C-B	R88M-1AM1K515C-BS2	R88M-1AM1K515C-BO	R88M-1AM1K515C-BOS2	P. 2-40
		3 kW	R88M-1AM3K015C-B	R88M-1AM3K015C-BS2	R88M-1AM3K015C-BO	R88M-1AM3K015C-BOS2	P. 2-42

2-3-3 Servo Drive and Servomotor Combination Tables

The following tables show the possible combinations of 1S-series Servo Drives Advance Type and Servomotors. The Servomotors and Servo Drives can only be used in the listed combinations. “□” at the end of the motor model number is for options, such as the shaft type and brake.

3,000-r/min Servomotors and Servo Drives

Main circuit power supply voltage	Servomotor rated output	Servomotor	Servo Drive
Single-phase/3-phase 200 VAC	200 W	R88M-1AM20030T-□	R88D-1SAN02H-ECT
	400 W	R88M-1AM40030T-□	R88D-1SAN04H-ECT
	750 W	R88M-1AM75030T-□	R88D-1SAN08H-ECT
	1.5 kW	R88M-1AL1K530T-□	R88D-1SAN15H-ECT
3-phase 200 VAC	1 kW	R88M-1AL1K030T-□	R88D-1SAN10H-ECT
	2 kW	R88M-1AL2K030T-□	R88D-1SAN20H-ECT
	2.6 kW	R88M-1AL2K630T-□	R88D-1SAN30H-ECT
3-phase 400 VAC	750 W	R88M-1AL75030C-□	R88D-1SAN10F-ECT
	1 kW	R88M-1AL1K030C-□	R88D-1SAN10F-ECT
	1.5 kW	R88M-1AL1K530C-□	R88D-1SAN15F-ECT
	2 kW	R88M-1AL2K030C-□	R88D-1SAN20F-ECT
	3 kW	R88M-1AL3K030C-□	R88D-1SAN30F-ECT

1,500-r/min Servomotors and Servo Drives

Main circuit power supply voltage	Servomotor rated output	Servomotor	Servo Drive
Single-phase/3-phase 200 VAC	1.5 kW	R88M-1AM1K515T-□	R88D-1SAN15H-ECT
3-phase 200 VAC	2.7 kW	R88M-1AM2K715T-□	R88D-1SAN30H-ECT
3-phase 400 VAC	1.5 kW	R88M-1AM1K515C-□	R88D-1SAN15F-ECT
	3 kW	R88M-1AM3K015C-□	R88D-1SAN30F-ECT

2-3-4 Decelerator Model Tables

The following tables list the Decelerator models for 1S-series Servomotors Advance Type.

The standard shaft type is a straight shaft. A model with a key and tap is indicated with “J” at □ of the Decelerator model number in the following table. Select an appropriate model based on the Servomotor rated output.

Backlash: 3 Arcminutes Max.

● For 3,000-r/min Servomotors

Specifications		Model	Reference
Servomotor rated output	Reduction ratio		
200 W	1/5	R88G-HPG14A05200B□	P. 2-46
	1/11	R88G-HPG14A11200B□	
	1/21	R88G-HPG20A21200B□	
	1/33	R88G-HPG20A33200B□	
	1/45	R88G-HPG20A45200B□	
400 W	1/5	R88G-HPG14A05400B□	P. 2-49
	1/11	R88G-HPG20A11400B□	
	1/21	R88G-HPG20A21400B□	
	1/33	R88G-HPG32A33400B□	
	1/45	R88G-HPG32A45400B□	
750 W (200 V)	1/5	R88G-HPG20A05750B□	
	1/11	R88G-HPG20A11750B□	
	1/21	R88G-HPG32A21750B□	
	1/33	R88G-HPG32A33750B□	
	1/45	R88G-HPG32A45750B□	
750 W (400 V)	1/5	R88G-HPG32A052K0B□	
	1/11	R88G-HPG32A112K0B□	
	1/21	R88G-HPG32A211K5B□	
	1/33	R88G-HPG32A33600SB□	
1 kW	1/5	R88G-HPG32A052K0B□	P. 2-49
	1/11	R88G-HPG32A112K0B□	
	1/21	R88G-HPG32A211K5B□	
1.5 kW	1/5	R88G-HPG32A052K0B□	
	1/11	R88G-HPG32A112K0B□	
	1/21	R88G-HPG32A211K5B□	
2 kW	1/5	R88G-HPG32A052K0B□	
	1/11	R88G-HPG32A112K0B□	
2.6 kW (200 V) 3 kW (400 V)	1/5	R88G-HPG32A053K0B□	

● For 1,500-r/min Servomotors

Specifications		Model	Reference
Servomotor rated output	Reduction ratio		
1.5 kW	1/5	R88G-HPG32A053K0B□	P. 2-51
	1/11	R88G-HPG32A112K0SB□	
	1/21	R88G-HPG50A21900TB□	
	1/33	R88G-HPG50A33900TB□	
2.7 kW (200 V) 3 kW (400 V)	1/5	R88G-HPG50A055K0SB□	
	1/11	R88G-HPG50A115K0SB□	
	1/20	R88G-HPG65A205K0SB□	
	1/25	R88G-HPG65A255K0SB□	

Backlash: 15 Arcminutes Max.

● For 3,000-r/min Servomotors

Specifications		Model	Reference
Servomotor rated output	Reduction ratio		
200 W	1/5	R88G-VRXF05B200CJ	P. 2-53
	1/9	R88G-VRXF09C200CJ	
	1/15	R88G-VRXF15C200CJ	
	1/25	R88G-VRXF25C200CJ	
400 W	1/5	R88G-VRXF05C400CJ	
	1/9	R88G-VRXF09C400CJ	
	1/15	R88G-VRXF15C400CJ	
	1/25	R88G-VRXF25C400CJ	
750 W (200 V)	1/5	R88G-VRXF05C750CJ	
	1/9	R88G-VRXF09D750CJ	
	1/15	R88G-VRXF15D750CJ	
	1/25	R88G-VRXF25D750CJ	

2-3-5 Servomotor and Decelerator Combination Tables

The following tables show the possible combinations of 1S-series Servomotors Advance Type and Decelerators. You cannot use a Servomotor with a key and tap (model numbers with -S2 at the end) in combination with a Decelerator.

Backlash: 3 Arcminutes Max.

● Servomotor 3,000 r/min and Decelerator Combination Table

<table>
<tr><th rowspan="2">Servomotor models</th><th colspan="5">Reduction ratio</th></tr>
<tr><th>1/5</th><th>1/11</th><th>1/21</th><th>1/33</th><th>1/45</th></tr>
<tr><td>R88M-1AM20030□</td><td>R88G-HPG 14A05200B□</td><td>R88G-HPG 14A11200B□</td><td>R88G-HPG 20A21200B□</td><td>R88G-HPG 20A33200B□</td><td>R88G-HPG 20A45200B□</td></tr>
<tr><td>R88M-1AM40030□</td><td>R88G-HPG 14A05400B□</td><td>R88G-HPG 20A11400B□</td><td>R88G-HPG 20A21400B□</td><td>R88G-HPG 32A33400B□</td><td>R88G-HPG 32A45400B□</td></tr>
<tr><td>R88M-1AM75030□ (200 VAC)</td><td>R88G-HPG 20A05750B□</td><td>R88G-HPG 20A11750B□</td><td>R88G-HPG 32A21750B□</td><td>R88G-HPG 32A33750B□</td><td>R88G-HPG 32A45750B□</td></tr>
<tr><td>R88M-1AL75030□ (400 VAC)</td><td rowspan="4">R88G-HPG 32A052K0B□</td><td rowspan="4">R88G-HPG 32A112K0B□</td><td rowspan="2">R88G-HPG 32A211K5B□</td><td>R88G-HPG 32A33600SB□</td><td rowspan="5">---</td></tr>
<tr><td>R88M-1AL1K030□</td><td rowspan="4">---</td></tr>
<tr><td>R88M-1AL1K530□</td><td rowspan="3">---</td></tr>
<tr><td>R88M-1AL2K030□</td></tr>
<tr><td>R88M-1AL2K630□</td><td rowspan="2">R88G-HPG 32A053K0B□</td><td rowspan="2">---</td></tr>
<tr><td>R88M-1AL3K030□</td></tr>
</table>

● Servomotor 1,500 r/min and Decelerator Combination Table

<table>
<tr><th rowspan="2">Servomotor models</th><th colspan="6">Reduction ratio</th></tr>
<tr><th>1/5</th><th>1/11</th><th>1/20</th><th>1/21</th><th>1/25</th><th>1/33</th></tr>
<tr><td>R88M-1AM1K515□</td><td>R88G-HPG 32A053K0B□</td><td>R88G-HPG 32A112K0SB□</td><td>---</td><td>R88G-HPG 50A21900TB□</td><td>---</td><td>R88G-HPG 50A33900TB□</td></tr>
<tr><td>R88M-1AM2K715□</td><td rowspan="2">R88G-HPG 50A055K0SB□</td><td rowspan="2">R88G-HPG 50A115K0SB□</td><td rowspan="2">R88G-HPG 65A205K0SB□</td><td rowspan="2">---</td><td rowspan="2">R88G-HPG 65A255K0SB□</td><td rowspan="2">---</td></tr>
<tr><td>R88M-1AM3K015□</td></tr>
</table>

Backlash: 15 Arcminutes Max.

● Servomotor 3,000 r/min and Decelerator Combination Table

Servomotor models	Reduction ratio			
	1/5	1/9	1/15	1/25
R88M-1AM20030□	R88G-VRXF05B200CJ	R88G-VRXF09C200CJ	R88G-VRXF15C200CJ	R88G-VRXF25C200CJ
R88M-1AM40030□	R88G-VRXF05C400CJ	R88G-VRXF09C400CJ	R88G-VRXF15C400CJ	R88G-VRXF25C400CJ
R88M-1AM75030□ (AC200V)	R88G-VRXF05C750CJ	R88G-VRXF09D750CJ	R88G-VRXF15D750CJ	R88G-VRXF25D750CJ

2-3-6 Table of Integrated Cables, Connectors, and Shield Clamps

Types of integrated cables, connectors, and shield clamps are listed below.

Integrated Cable

Applicable Servomotors			Model	
			Without brake wire	With brake wire
200 V	3,000-r/min Servomotors of 200 W, 400 W, 750 W	3 m	R88A-CX1A003SF	R88A-CX1A003BF
		5 m	R88A-CX1A005SF	R88A-CX1A005BF
		10 m	R88A-CX1A010SF	R88A-CX1A010BF
		15 m	R88A-CX1A015SF	R88A-CX1A015BF
		20 m	R88A-CX1A020SF	R88A-CX1A020BF
200 V	3,000-r/min Servomotors of 1 kW	3 m	R88A-CX1B003SF	R88A-CX1B003BF
		5 m	R88A-CX1B005SF	R88A-CX1B005BF
		10 m	R88A-CX1B010SF	R88A-CX1B010BF
		15 m	R88A-CX1B015SF	R88A-CX1B015BF
		20 m	R88A-CX1B020SF	R88A-CX1B020BF
200 V 400 V	200 V 3,000-r/min Servomotors of 1.5 kW 1,500-r/min Servomotors of 1.5 kW 400 V 3,000-r/min Servomotors of 750 W, 1 kW, 1.5 kW, 2 kW, 3 kW 1,500-r/min Servomotors of 1.5 kW, 3kW	3 m	R88A-CX1C003SF	R88A-CX1C003BF
		5 m	R88A-CX1C005SF	R88A-CX1C005BF
		10 m	R88A-CX1C010SF	R88A-CX1C010BF
		15 m	R88A-CX1C015SF	R88A-CX1C015BF
		20 m	R88A-CX1C020SF	R88A-CX1C020BF
200 V	3,000-r/min Servomotors of 2 kW, 2.6 kW 1,500-r/min Servomotors of 2.7 kW	3 m	R88A-CX1D003SF	R88A-CX1D003BF
		5 m	R88A-CX1D005SF	R88A-CX1D005BF
		10 m	R88A-CX1D010SF	R88A-CX1D010BF
		15 m	R88A-CX1D015SF	R88A-CX1D015BF
		20 m	R88A-CX1D020SF	R88A-CX1D020BF

Extension Cable

Use the following extension cables regardless of whether or not a cable has a brake. Use R88A-CX1BE□□BF when you use an extension cable for R88A-CX1C□□□□□.

Applicable Servomotors			Model
200 V	3,000-r/min Servomotors of 200 W, 400 W, 750 W	10 m	R88A-CX1AE10BF
		20 m	R88A-CX1AE20BF
200 V 400 V	200 V 3,000-r/min Servomotors of 1 kW, 1.5 kW 1,500-r/min Servomotors of 1.5 kW 400 V 3,000-r/min Servomotors of 750 W, 1 kW, 1.5 kW, 2 kW, 3 kW 1,500-r/min Servomotors of 1.5 kW, 3 kW	10 m	R88A-CX1BE10BF
		20 m	R88A-CX1BE20BF

Applicable Servomotors			Model
200 V	3,000-r/min Servomotors of 2 kW, 2.6 kW 1,500-r/min Servomotors of 2.7 kW	10 m	R88A-CX1DE10BF
		20 m	R88A-CX1DE20BF

Peripheral Connector

● Servo Drive Side Connector

Name and application	Model
Main circuit connector (CNA)*1 For R88D-1SAN02H-ECT/ -1SAN04H-ECT/ -1SAN08H-ECT/ -1SAN10H-ECT	R88A-CN102P*4
Main circuit connector A (CNA)*2 For R88D-1SAN15H-ECT/ -1SAN20H-ECT/ -1SAN30H-ECT/ -1SAN10F-ECT/ -1SAN15F-ECT/ -1SAN20F-ECT/ -1SAN30F-ECT	R88A-CN103P*4
Main circuit connector B (CNB)*2 For R88D-1SAN15H-ECT/ -1SAN20H-ECT/ -1SAN30H-ECT/ -1SAN10F-ECT/ -1SAN15F-ECT/ -1SAN20F-ECT/ -1SAN30F-ECT	R88A-CN104P*4
Motor connector (CNC) For R88D-1SAN02H-ECT/ -1SAN04H-ECT/ -1SAN08H-ECT/ -1SAN10H-ECT	R88A-CN101A*4
Motor connector (CNC) For R88D-1SAN15H-ECT/ -1SAN20H-ECT/ -1SAN30H-ECT/ -1SAN10F-ECT/ -1SAN15F-ECT/ -1SAN20F-ECT/ -1SAN30F-ECT	R88A-CN102A*4
Control power supply connector (CND) For R88D-1SAN15H-ECT/ -1SAN20H-ECT/ -1SAN30H-ECT/ -1SAN10F-ECT/ -1SAN15F-ECT/ -1SAN20F-ECT/ -1SAN30F-ECT	R88A-CN101P*4
Control I/O connector (CN1)	R88A-CN102C
Encoder connector (CN2)	R88A-CN101R
Brake interlock connector (CN12)	R88A-CN101B
Safety signal connector (CN14)*3	R88A-CN101S
Safe brake control connector (CN15)	R88A-CN102S

*1. Two short-circuit wires are connected to the connector.

*2. One short-circuit wire is connected to the connector.

*3. Four short-circuit wires are connected to the connector. A pin to prevent improper wiring are included.

*4. One opener is included.

Shield Clamp Bracket

A shield clamp is used to fix the integrated cable and to connect the shield of the integrated cable to FG of the Servo Drive. A shield clamp consists of a shield clamp bracket and a shield clamp plate. For the each parts name, refer to *1-3-5 Shield Clamp Part Names* on page 1-16.

The shield clamp is included in the integrated cables as follows.

Name	Servo Drive model	Integrated cable model	Shield clamp bracket model
Shield Clamp Bracket S	R88D-1SAN02H-ECT R88D-1SAN04H-ECT R88D-1SAN08H-ECT	R88A-CX1A□□□□F	R88A-SC10CX
	R88D-1SAN10H-ECT	R88A-CX1B□□□□F	
	R88D-1SAN15H-ECT R88D-1SAN10F-ECT R88D-1SAN15F-ECT R88D-1SAN20F-ECT R88D-1SAN30F-ECT	R88A-CX1C□□□□F	
	R88D-1SAN20H-ECT R88D-1SAN30H-ECT	R88A-CX1D□□□□F	

Note A shield clamp bracket comes with an integrated cable.
An extension cable does not come with a shield clamp bracket.

Precautions for Correct Use

For methods for mounting a shield clamp to a Servo Drive and for wiring power cables, refer to *4-2-2 Procedure for Wiring Connector-type Terminal Blocks and for Mounting a Shield Clamp* on page 4-26. Use the shield clamp as described in this manual. Malfunction of ambient equipment may result due to deterioration of noise immunity and radiated noise.

2-3-7 External Regeneration Resistor and External Regeneration Resistance Unit Model Tables

The following tables list the models of External Regeneration Resistors and External Regeneration Resistance Units.

External Regeneration Resistors

Applicable Servo Drive	Model	Specifications
R88D-1SAN02H-ECT	R88A-RR12025	Regeneration process capacity: 24 W, 25 Ω
R88D-1SAN30H-ECT	R88A-RR30008	Regeneration process capacity: 60 W, 8 Ω
R88D-1SAN20H-ECT	R88A-RR30010	Regeneration process capacity: 60 W, 10 Ω
R88D-1SAN15H-ECT	R88A-RR30014	Regeneration process capacity: 60 W, 14 Ω
R88D-1SAN08H-ECT/-1SAN10H-ECT/-1SAN20F-ECT*1	R88A-RR30020	Regeneration process capacity: 60 W, 20 Ω
R88D-1SAN02H-ECT/-1SAN04H-ECT	R88A-RR30025	Regeneration process capacity: 60 W, 25 Ω
R88D-1SAN30F-ECT	R88A-RR30032	Regeneration process capacity: 60 W, 32 Ω
R88D-1SAN10F-ECT*1	R88A-RR30033	Regeneration process capacity: 60 W, 33 Ω
R88D-1SAN15F-ECT	R88A-RR30054	Regeneration process capacity: 60 W, 54 Ω

*1. Use two series-connected External Regeneration Resistors for this model.

External Regeneration Resistance Units

Applicable Servo Drive	Model	Specifications
R88D-1SAN30H-ECT	R88A-RR1K608	Regeneration process capacity: 640 W, 8 Ω
R88D-1SAN20H-ECT	R88A-RR1K610	Regeneration process capacity: 640 W, 10 Ω
R88D-1SAN15H-ECT	R88A-RR1K614	Regeneration process capacity: 640 W, 14 Ω
R88D-1SAN08H-ECT/-1SAN10H-ECT/ -1SAN20F-ECT*1	R88A-RR1K620	Regeneration process capacity: 640 W, 20 Ω
R88D-1SAN30F-ECT	R88A-RR1K632	Regeneration process capacity: 640 W, 32 Ω
R88D-1SAN20F-ECT	R88A-RR1K640	Regeneration process capacity: 640 W, 40 Ω
R88D-1SAN15F-ECT	R88A-RR1K654	Regeneration process capacity: 640 W, 54 Ω
R88D-1SAN10F-ECT	R88A-RR1K666	Regeneration process capacity: 640 W, 66 Ω

*1. Use two series-connected External Regeneration Resistors for this model.

2-3-8 Reactor Model Table

The following table lists the Reactor models.

Applicable Servo Drive	Model	Type of Reactor
R88D-1SAN02H-ECT	R88A-PD2002	DC reactor
R88D-1SAN04H-ECT	R88A-PD2004	
R88D-1SAN08H-ECT	R88A-PD2007	
R88D-1SAN10H-ECT/-1SAN15H-ECT	R88A-PD2015	
R88D-1SAN20H-ECT	R88A-PD2022	
R88D-1SAN30H-ECT	R88A-PD2037	
R88D-1SAN10F-ECT/-1SAN15F-ECT	R88A-PD4015	
R88D-1SAN20F-ECT	R88A-PD4022	
R88D-1SAN30F-ECT	R88A-PD4037	

2-4 External and Mounting Dimensions

This section provides the external dimensions and mounting dimensions of Servo Drives, Servomotors, Decelerators, and peripheral devices.

2-4-1 Servo Drive Dimensions

The Servo Drives are described in order of increasing rated output of the applicable Servomotors.

Single-phase/3-phase 200 VAC: R88D-1SAN02H-ECT/ -1SAN04H-ECT/-1SAN08H-ECT (200 to 750 W) 3-phase 200 VAC: R88D-1SAN10H-ECT (1 kW)

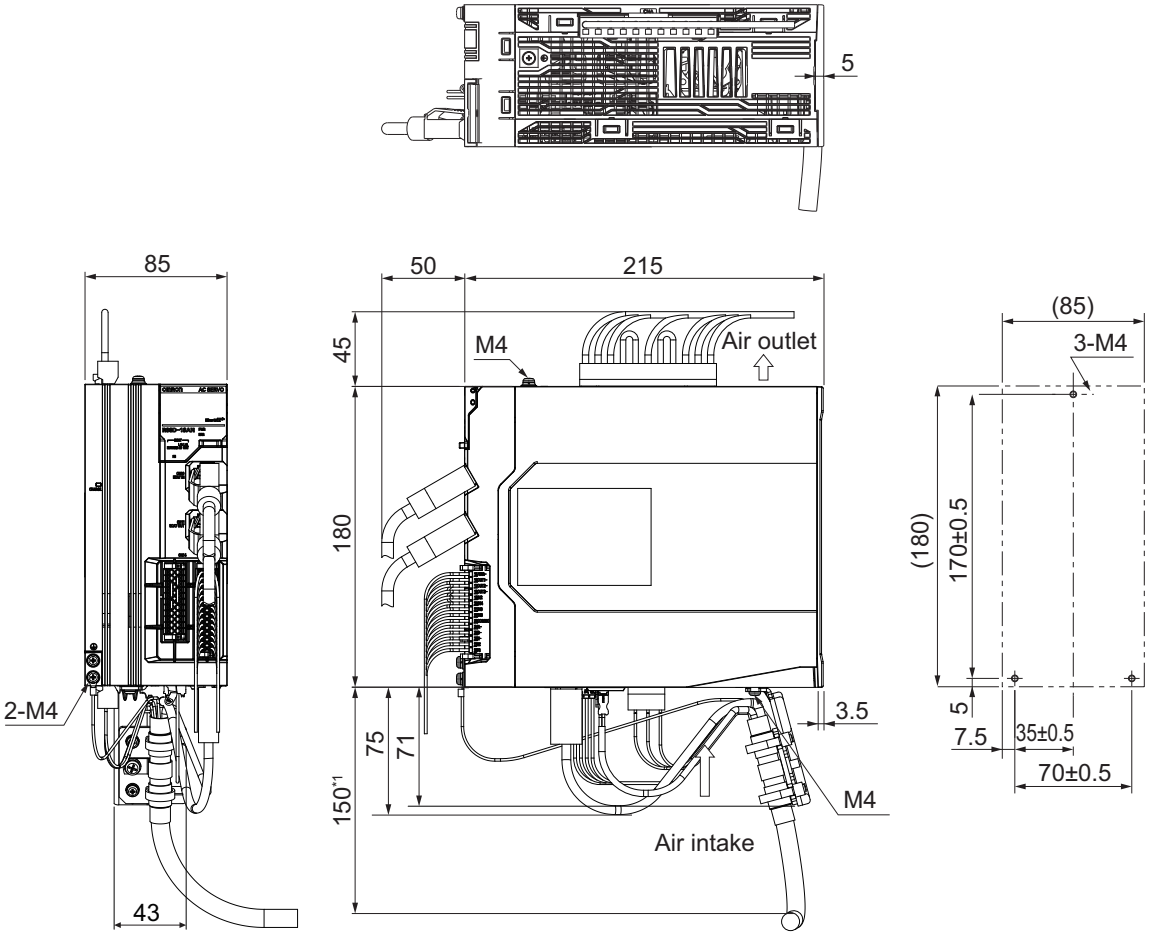

External dimensions

Mounting dimensions

*1. The value is 180 for R88D-1SAN10H-ECT.

Single-phase/3-phase 200 VAC: R88D-1SAN15H-ECT (1.5 kW)
3-phase 200 VAC: R88D-1SAN20H-ECT/-1SAN30H-ECT (2 to 3 kW)
3-phase 400 VAC: R88D-1SAN10F-ECT/-1SAN15F-ECT/ -1SAN20F-ECT/-1SAN30F-ECT (1 to 3 kW)

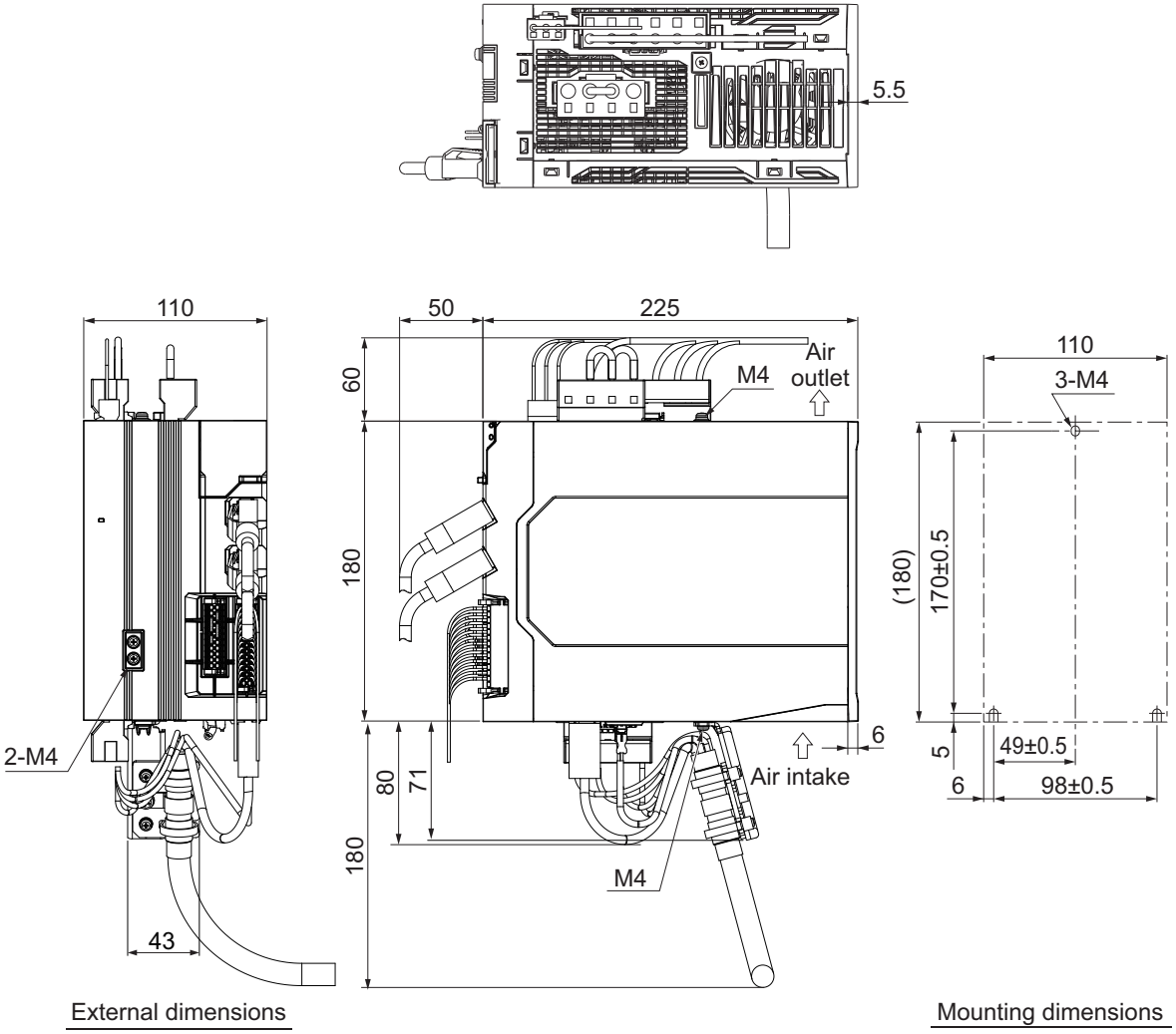

2-4-2 Servomotor Dimensions

Servomotors are grouped by rated rotation speed, and described in order of increasing rated output.

3,000-r/min Servomotors (200 V)

- **200 W/400 W (without Brake)**

R88M-1AM20030T(-O/-S2/-OS2)

R88M-1AM40030T(-O/-S2/-OS2)

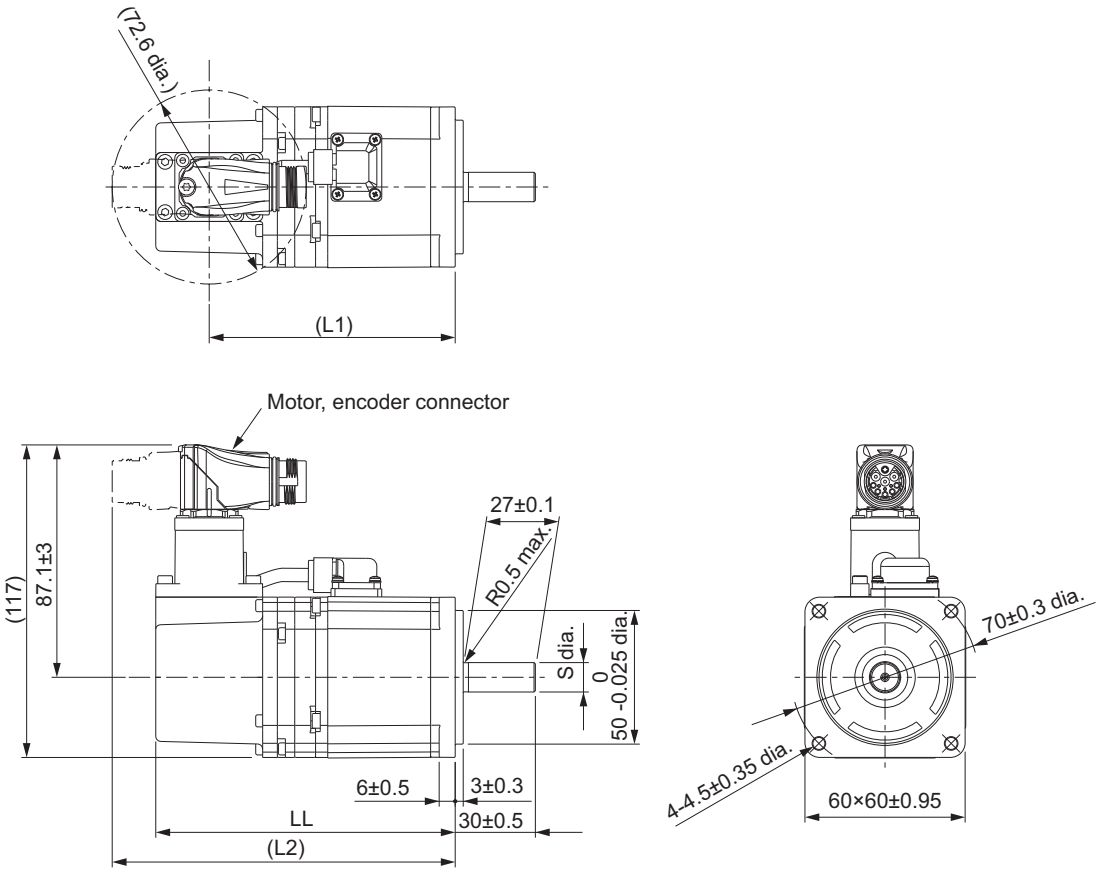

Note The standard shaft type is a straight shaft. Models with a key and tap are indicated with “S2” at the end of the model number. Models with an oil seal are indicated with “O” at the end of the model number.

Model	Dimensions [mm]			
	S	LL	L1	L2
R88M-1AM20030T(-S2)	11 0 -0.011 dia.	112±1	92	128
R88M-1AM40030T(-S2)	14 0 -0.011 dia.	138±1	118	154
R88M-1AM20030T-O(S2)	11 0 -0.011 dia.	119±1	99	135
R88M-1AM40030T-O(S2)	14 0 -0.011 dia.	145±1	125	161

Shaft-end with key and tap

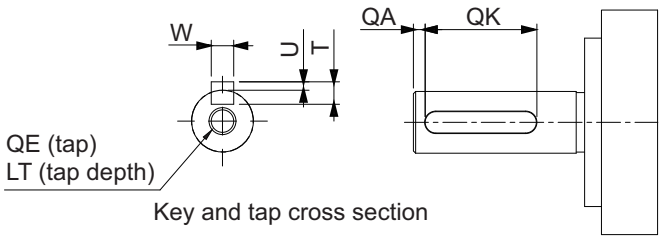

Model	Dimensions [mm]						
	QA	QK	W	T	U	QE	LT
R88M-1AM20030T(-S2/-OS2)	2	20	$4^{0}_{-0.03}$	4	$1.5^{0}_{-0.2}$	M4	10
R88M-1AM40030T(-S2/-OS2)	2	20	$5^{0}_{-0.03}$	5	$1.5^{0}_{-0.2}$	M5	12

● 200 W/400 W (with Brake)

R88M-1AM20030T-B(O/S2/OS2)

R88M-1AM40030T-B(O/S2/OS2)

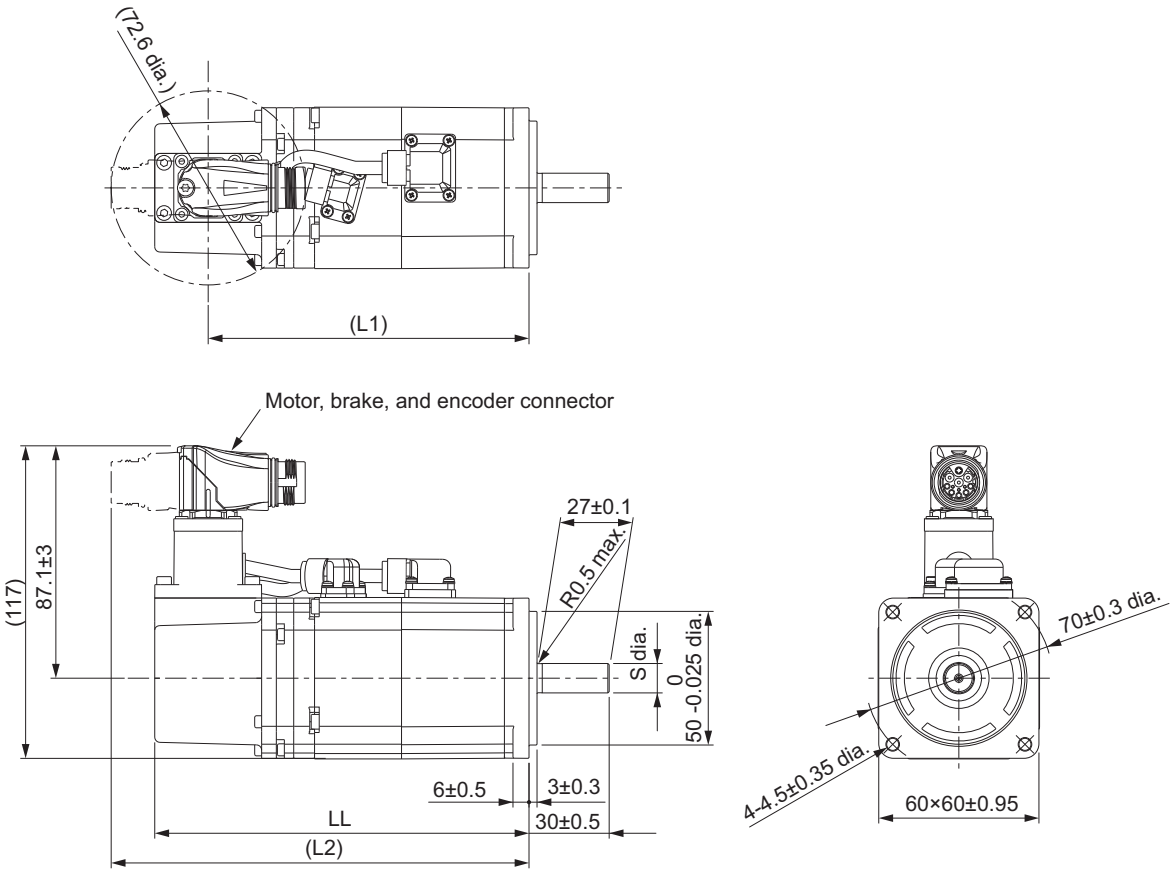

Note The standard shaft type is a straight shaft. Models with a key and tap are indicated with “S2” at the end of the model number.
Models with an oil seal are indicated with “O” at the end of the model number.

Model	Dimensions [mm]			
	S	LL	L1	L2
R88M-1AM20030T-B(S2)	11 0 -0.011 dia.	140±1	120	156
R88M-1AM40030T-B(S2)	14 0 -0.011 dia.	166±1	146	182
R88M-1AM20030T-BO(S2)	11 0 -0.011 dia.	147±1	127	163
R88M-1AM40030T-BO(S2)	14 0 -0.011 dia.	173±1	153	189

Shaft-end with key and tap

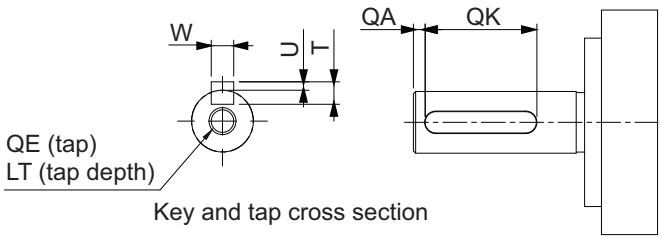

Model	Dimensions [mm]						
	QA	QK	W	T	U	QE	LT
R88M-1AM20030T-B(S2/OS2)	2	20	$4^{0}_{-0.03}$	4	$1.5^{0}_{-0.2}$	M4	10
R88M-1AM40030T-B(S2/OS2)	2	20	$5^{0}_{-0.03}$	5	$1.5^{0}_{-0.2}$	M5	12

● 750 W (without Brake)

R88M-1AM75030T(-O/-S2/-OS2)

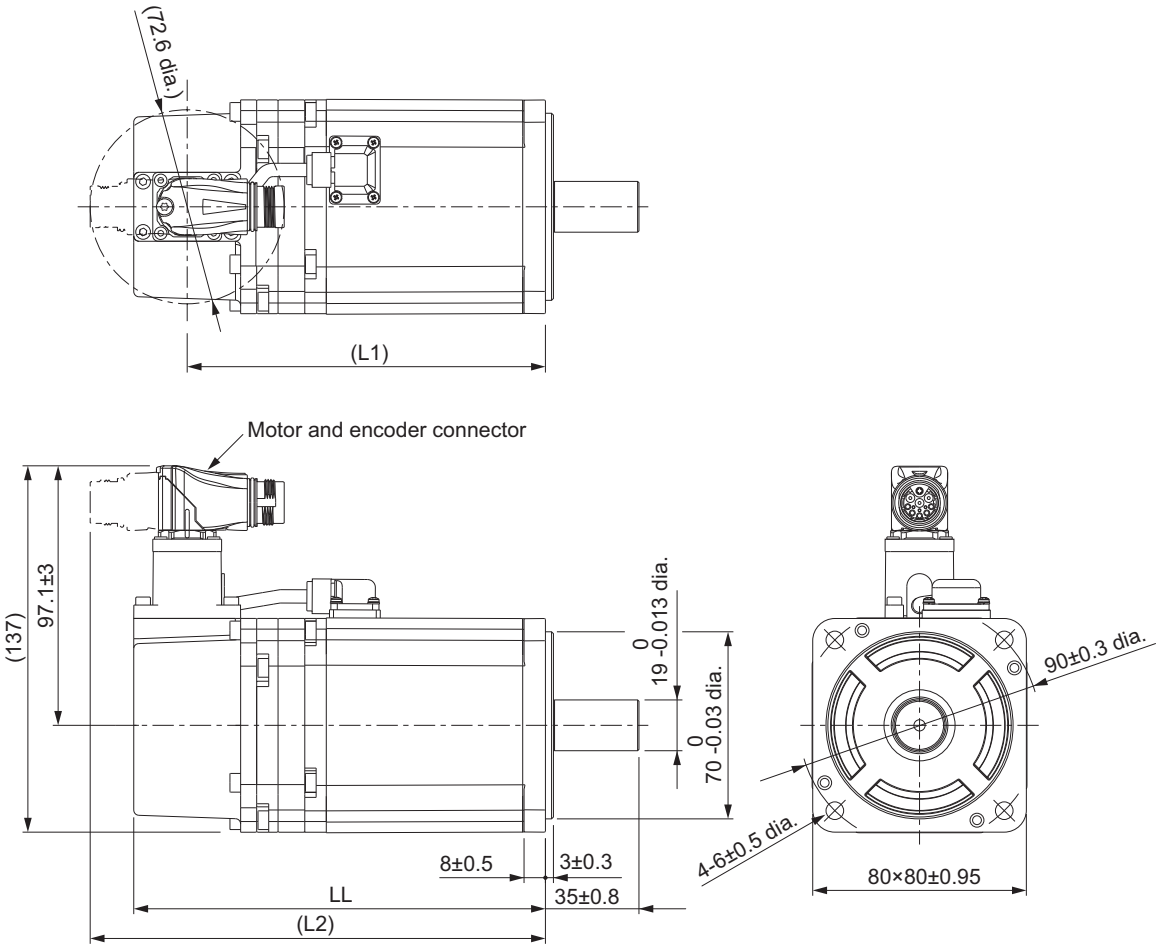

Note The standard shaft type is a straight shaft. Models with a key and tap are indicated with “S2” at the end of the model number.
Models with an oil seal are indicated with “O” at the end of the model number.

Model	Dimensions [mm]		
	LL	L1	L2
R88M-1AM75030T(-S2)	154±1	134	170
R88M-1AM75030T-O(S2)	161±1	141	177

Shaft-end with key and tap

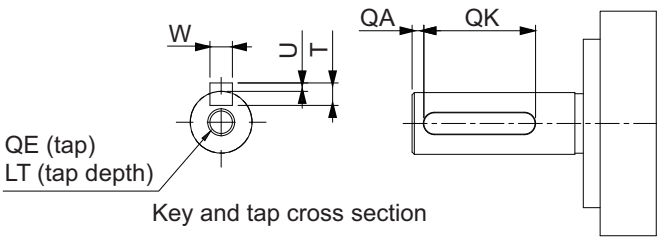

Model	Dimensions [mm]						
	QA	QK	W	T	U	QE	LT
R88M-1AM75030T(-S2/-OS2)	3	24	6 0 -0.03	6	2.5 0 -0.2	M5	12

● 750 W (with Brake)

R88M-1AM75030T-B(O/S2/OS2)

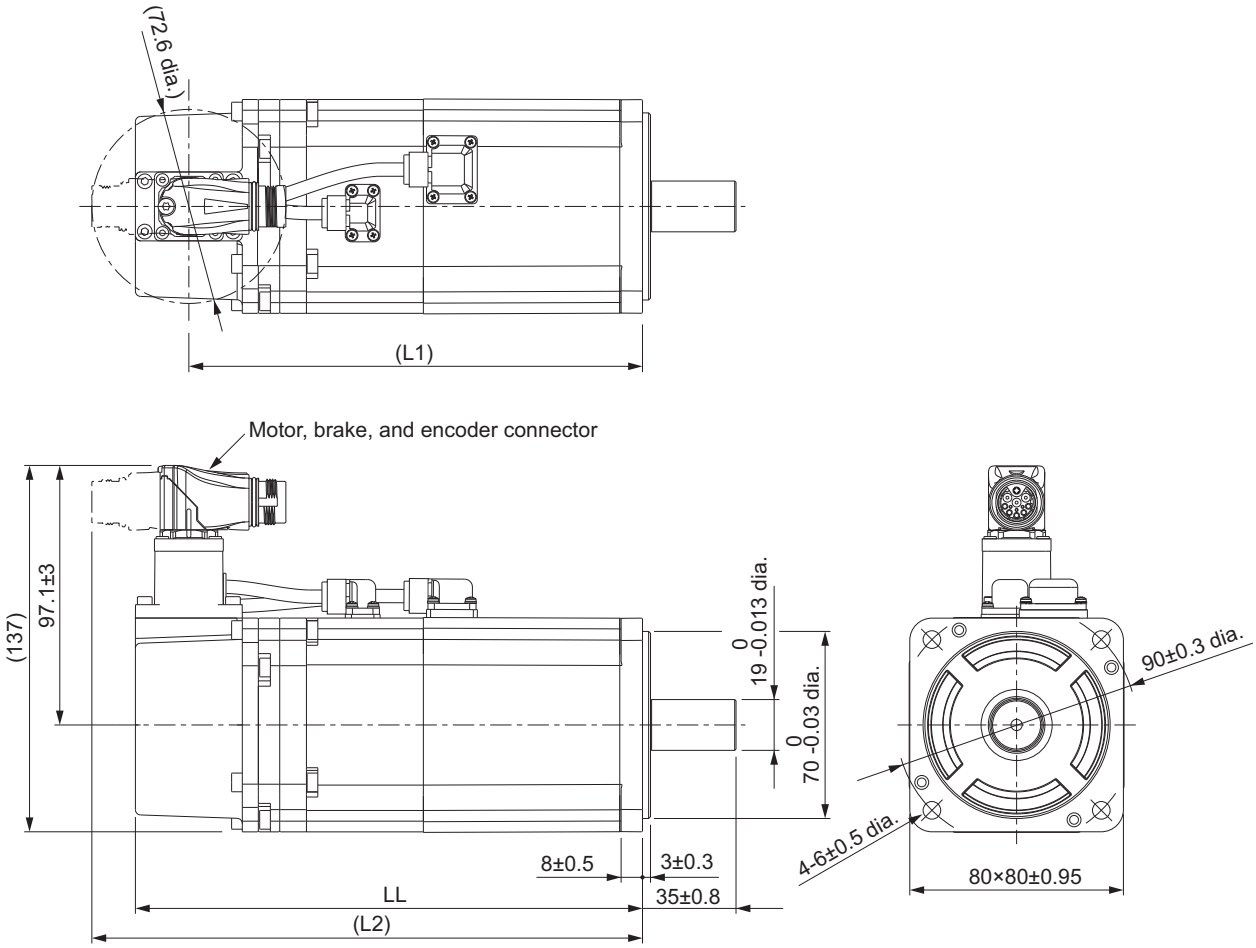

Note The standard shaft type is a straight shaft. Models with a key and tap are indicated with “S2” at the end of the model number.
Models with an oil seal are indicated with “O” at the end of the model number.

Model	Dimensions [mm]		
	LL	L1	L2
R88M-1AM75030T-B(S2)	189.8±2	170	206
R88M-1AM75030T-BO(S2)	196.8±2	177	213

Shaft-end with key and tap

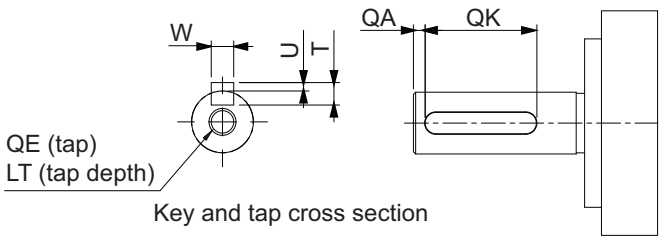

Model	Dimensions [mm]						
	QA	QK	W	T	U	QE	LT
R88M-1AM75030T-B(S2/OS2)	3	24	6 0 -0.03	6	2.5 0 -0.2	M5	12

● 1 kW/1.5 kW/2 kW (without Brake)

R88M-1AL1K030T(-O/-S2/-OS2)

R88M-1AL1K530T(-O/-S2/-OS2)

R88M-1AL2K030T(-O/-S2/-OS2)

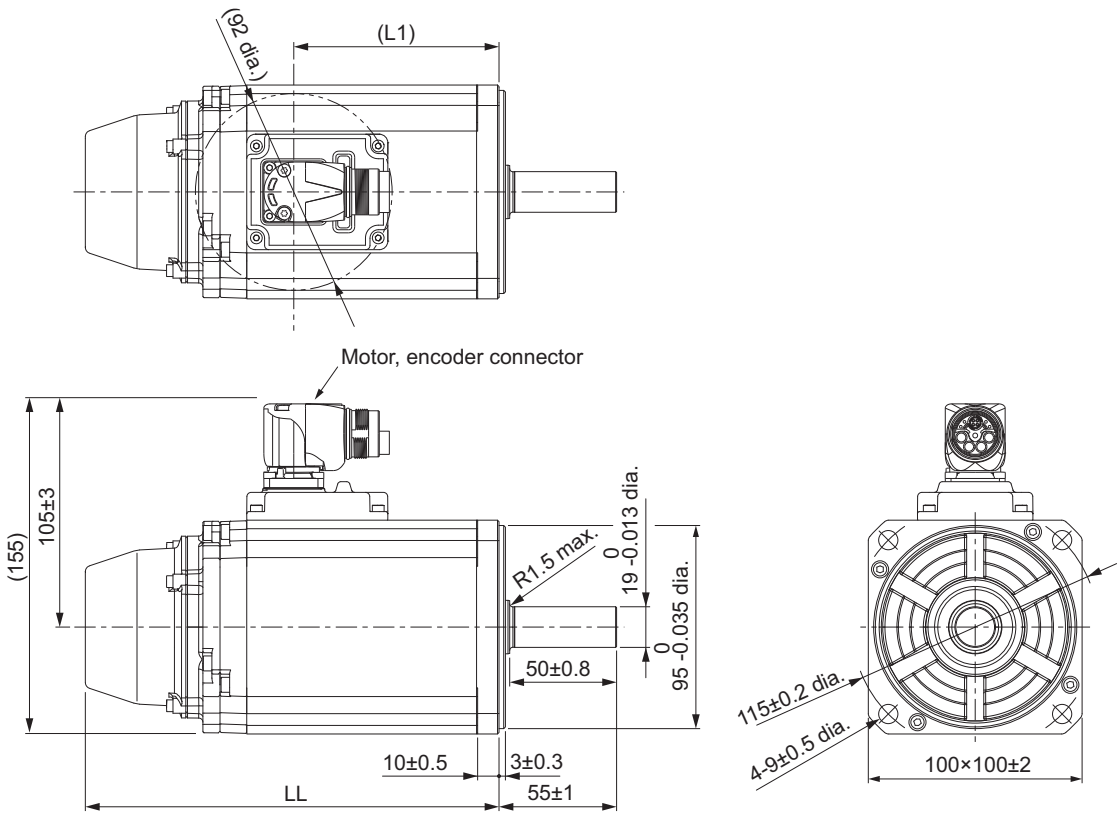

Note The standard shaft type is a straight shaft. Models with a key and tap are indicated with “S2” at the end of the model number.
Models with an oil seal are indicated with “O” at the end of the model number.

Model	Dimensions [mm]	
	LL	L1
R88M-1AL1K030T(-O/-S2/-OS2)	193.5±2	96
R88M-1AL1K530T(-O/-S2/-OS2)	193.5±2	96
R88M-1AL2K030T(-O/-S2/-OS2)	204.5±3	107

Shaft-end with key and tap

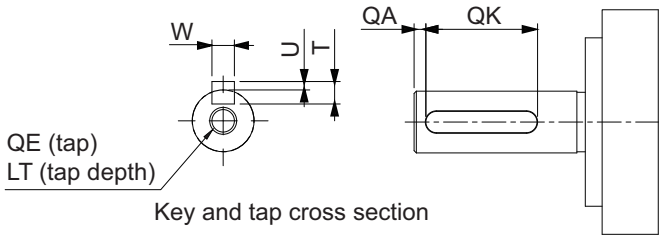

Model	Dimensions [mm]						
	QA	QK	W	T	U	QE	LT
R88M-1AL1K030T(-S2/-OS2)	3	42	6 0 -0.03	6	2.5 0 -0.2	M5	12
R88M-1AL1K530T(-S2/-OS2)	3	42	6 0 -0.03	6	2.5 0 -0.2	M5	12
R88M-1AL2K030T(-S2/-OS2)	3	42	6 0 -0.03	6	2.5 0 -0.2	M5	12

● 1 kW/1.5 kW/2 kW (with Brake)

R88M-1AL1K030T-B(O/S2/OS2)

R88M-1AL1K530T-B(O/S2/OS2)

R88M-1AL2K030T-B(O/S2/OS2)

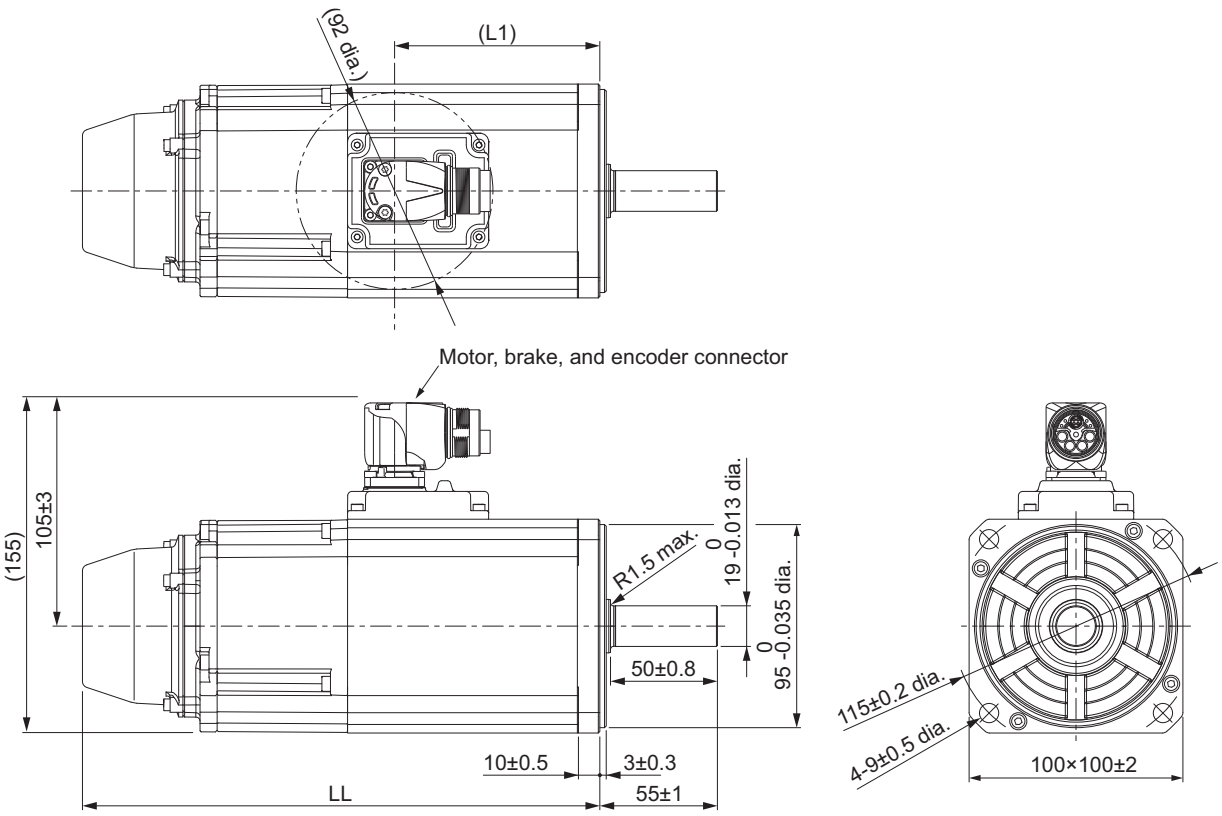

Note The standard shaft type is a straight shaft. Models with a key and tap are indicated with “S2” at the end of the model number.
Models with an oil seal are indicated with “O” at the end of the model number.

Model	Dimensions [mm]	
	LL	L1
R88M-1AL1K030T-B(O/S2/OS2)	242±3	96
R88M-1AL1K530T-B(O/S2/OS2)	242±3	96
R88M-1AL2K030T-B(O/S2/OS2)	253±3	107

Shaft-end with key and tap

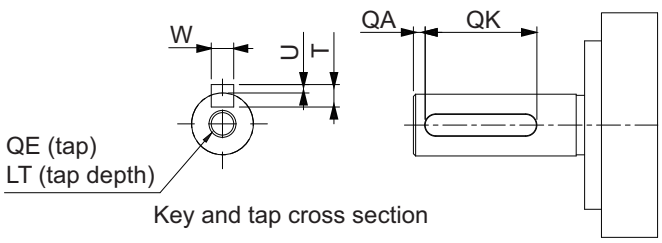

Model	Dimensions [mm]						
	QA	QK	W	T	U	QE	LT
R88M-1AL1K030T-B(S2/OS2)	3	42	6 0 -0.03	6	2.5 0 -0.2	M5	12
R88M-1AL1K530T-B(S2/OS2)	3	42	6 0 -0.03	6	2.5 0 -0.2	M5	12
R88M-1AL2K030T-B(S2/OS2)	3	42	6 0 -0.03	6	2.5 0 -0.2	M5	12

● 2.6 kW (without Brake)

R88M-1AL2K630T(-O/-S2/-OS2)

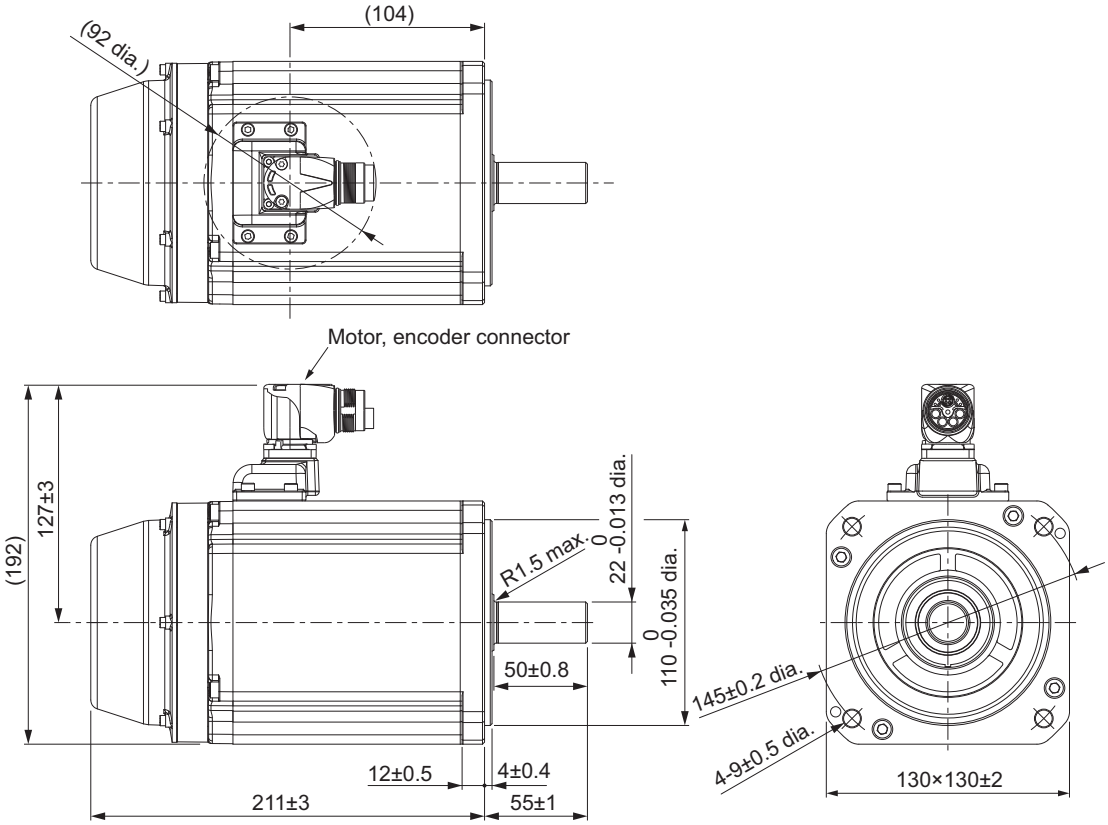

Note The standard shaft type is a straight shaft. Models with a key and tap are indicated with “S2” at the end of the model number.
Models with an oil seal are indicated with “O” at the end of the model number.

Shaft-end with key and tap

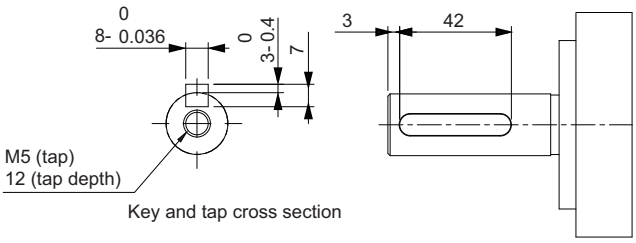

● 2.6 kW (with Brake)

R88M-1AL2K630T-B(O/S2/OS2)

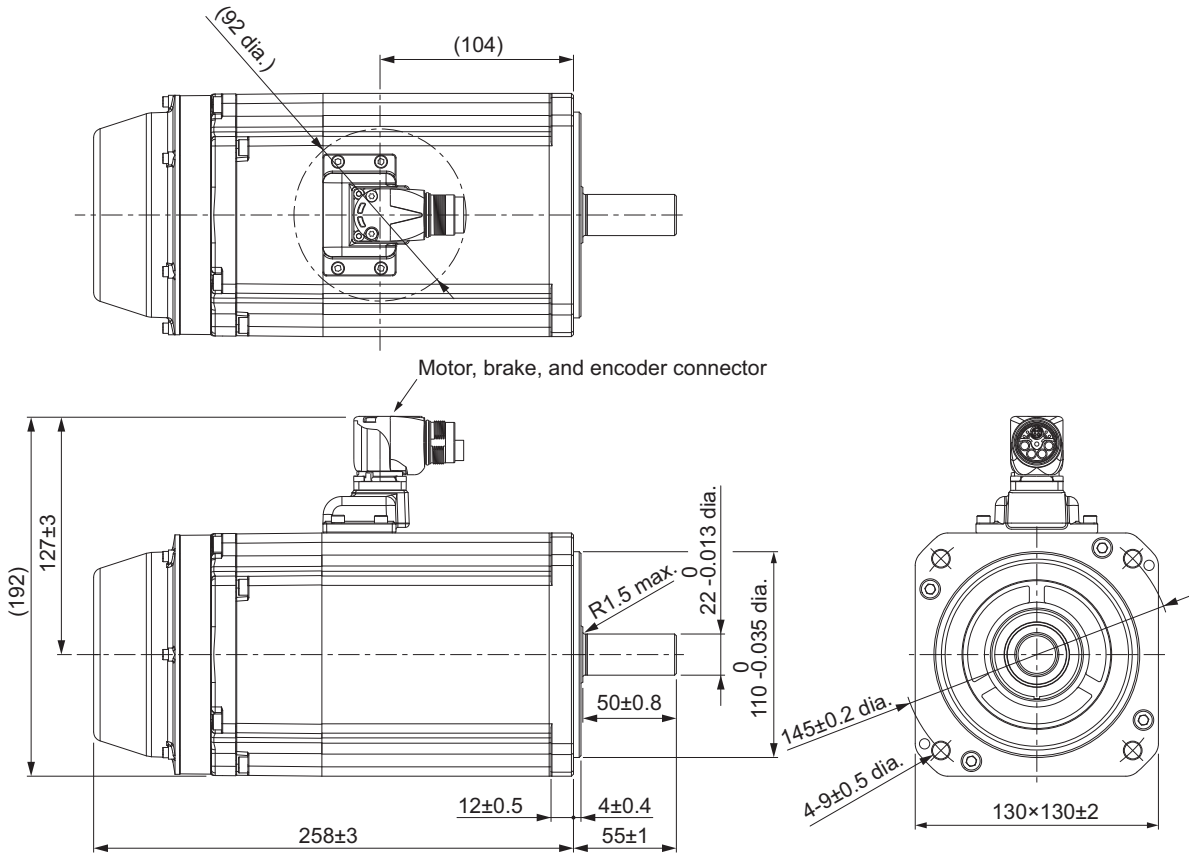

Note The standard shaft type is a straight shaft. Models with a key and tap are indicated with “S2” at the end of the model number.
Models with an oil seal are indicated with “O” at the end of the model number.

Shaft-end with key and tap

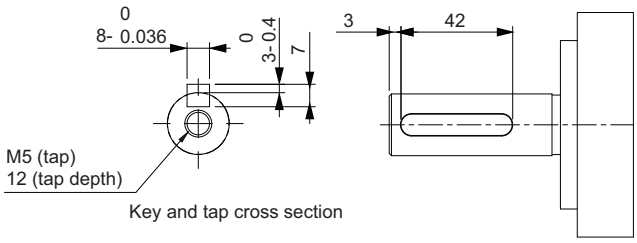

3,000-r/min Servomotors (400 V)

● 750 W/1 kW/1.5 kW/2 kW (without Brake)

R88M-1AL75030C(-O/-S2/-OS2)

R88M-1AL1K030C(-O/-S2/-OS2)

R88M-1AL1K530C(-O/-S2/-OS2)

R88M-1AL2K030C(-O/-S2/-OS2)

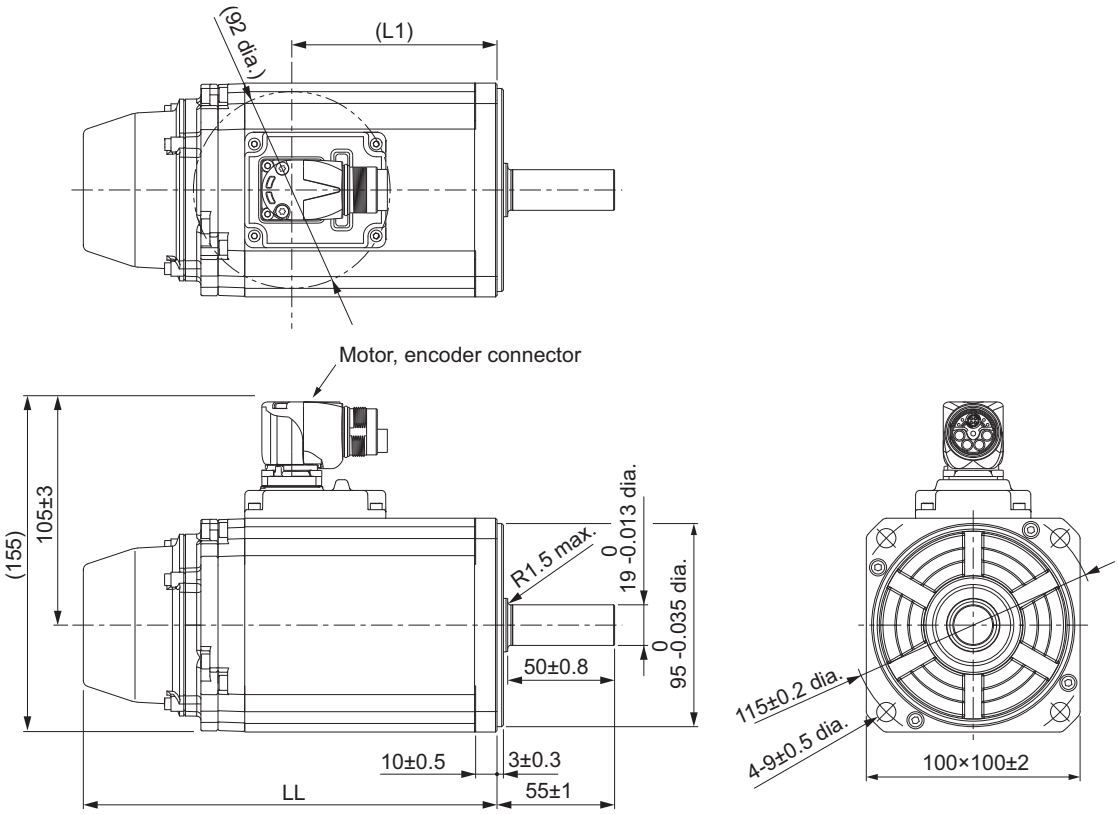

Note The standard shaft type is a straight shaft. Models with a key and tap are indicated with “S2” at the end of the model number.
Models with an oil seal are indicated with “O” at the end of the model number.

Model	Dimensions [mm]	
	LL	L1
R88M-1AL75030C(-O/-S2/-OS2)	164.5±2	67
R88M-1AL1K030C(-O/-S2/-OS2)	193.5±2	96
R88M-1AL1K530C(-O/-S2/-OS2)	193.5±2	96
R88M-1AL2K030C(-O/-S2/-OS2)	204.5±3	107

Shaft-end with key and tap

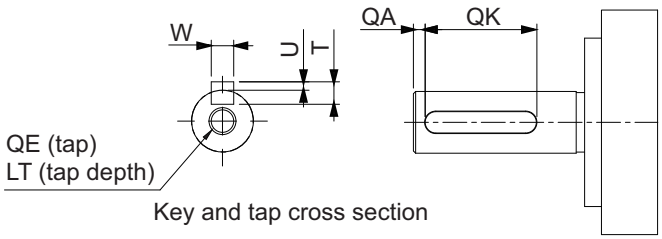

Model	Dimensions [mm]						
	QA	QK	W	T	U	QE	LT
R88M-1AL75030C(-S2/-OS2)	3	42	$6^{0}_{-0.03}$	6	$2.5^{0}_{-0.2}$	M5	12
R88M-1AL1K030C(-S2/-OS2)	3	42	$6^{0}_{-0.03}$	6	$2.5^{0}_{-0.2}$	M5	12
R88M-1AL1K530C(-S2/-OS2)	3	42	$6^{0}_{-0.03}$	6	$2.5^{0}_{-0.2}$	M5	12
R88M-1AL2K030C(-S2/-OS2)	3	42	$6^{0}_{-0.03}$	6	$2.5^{0}_{-0.2}$	M5	12

● 750 W/1 kW/1.5 kW/2 kW (with Brake)

R88M-1AL75030C-B(O/S2/OS2)

R88M-1AL1K030C-B(O/S2/OS2)

R88M-1AL1K530C-B(O/S2/OS2)

R88M-1AL2K030C-B(O/S2/OS2)

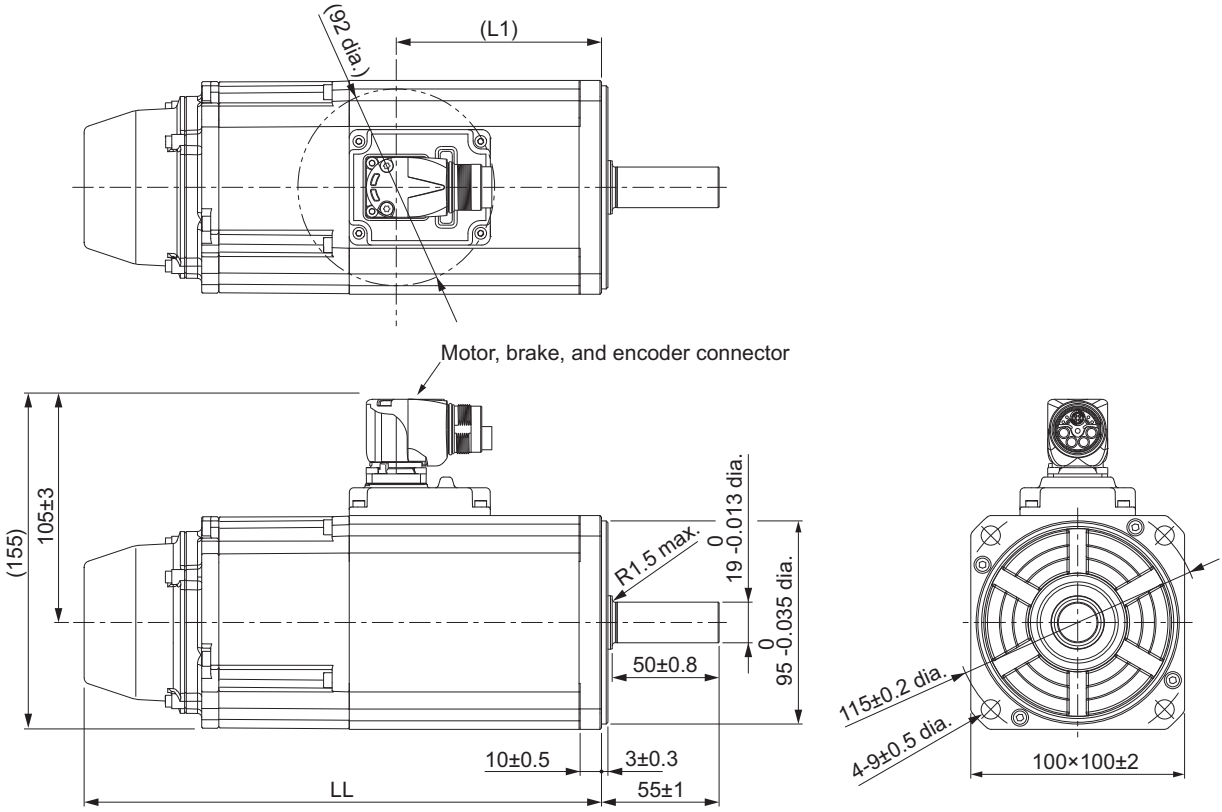

Note The standard shaft type is a straight shaft. Models with a key and tap are indicated with “S2” at the end of the model number.
Models with an oil seal are indicated with “O” at the end of the model number.

Model	Dimensions [mm]	
	LL	L1
R88M-1AL75030C-B(O/S2/OS2)	213±3	67
R88M-1AL1K030C-B(O/S2/OS2)	242±3	96
R88M-1AL1K530C-B(O/S2/OS2)	242±3	96
R88M-1AL2K030C-B(O/S2/OS2)	253±3	107

Shaft-end with key and tap

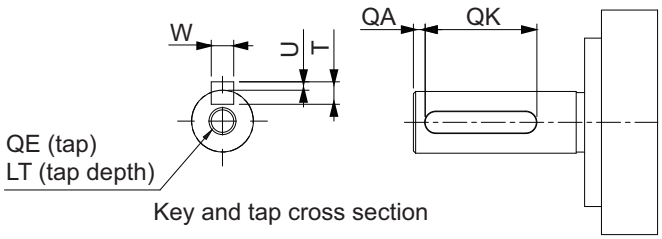

Model	Dimensions [mm]						
	QA	QK	W	T	U	QE	LT
R88M-1AL75030C-B(S2/OS2)	3	42	$6^{0}_{-0.03}$	6	$2.5^{0}_{-0.2}$	M5	12
R88M-1AL1K030C-B(S2/OS2)	3	42	$6^{0}_{-0.03}$	6	$2.5^{0}_{-0.2}$	M5	12
R88M-1AL1K530C-B(S2/OS2)	3	42	$6^{0}_{-0.03}$	6	$2.5^{0}_{-0.2}$	M5	12
R88M-1AL2K030C-B(S2/OS2)	3	42	$6^{0}_{-0.03}$	6	$2.5^{0}_{-0.2}$	M5	12

● 3 kW (without Brake)

R88M-1AL3K030C(-O/-S2/-OS2)

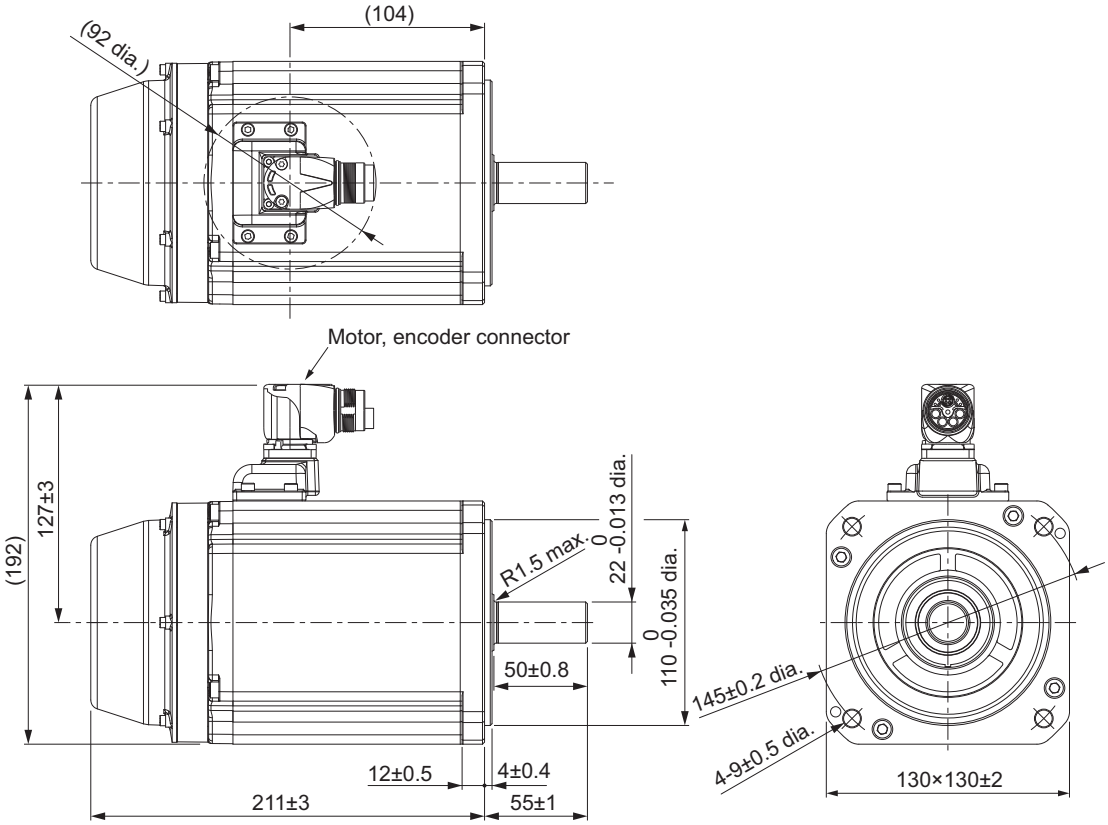

Note The standard shaft type is a straight shaft. Models with a key and tap are indicated with “S2” at the end of the model number.
Models with an oil seal are indicated with “O” at the end of the model number.

Shaft-end with key and tap

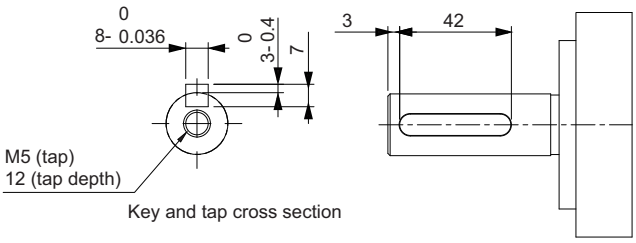

● 3 kW (with Brake)

R88M-1AL3K030C-B(O/S2/OS2)

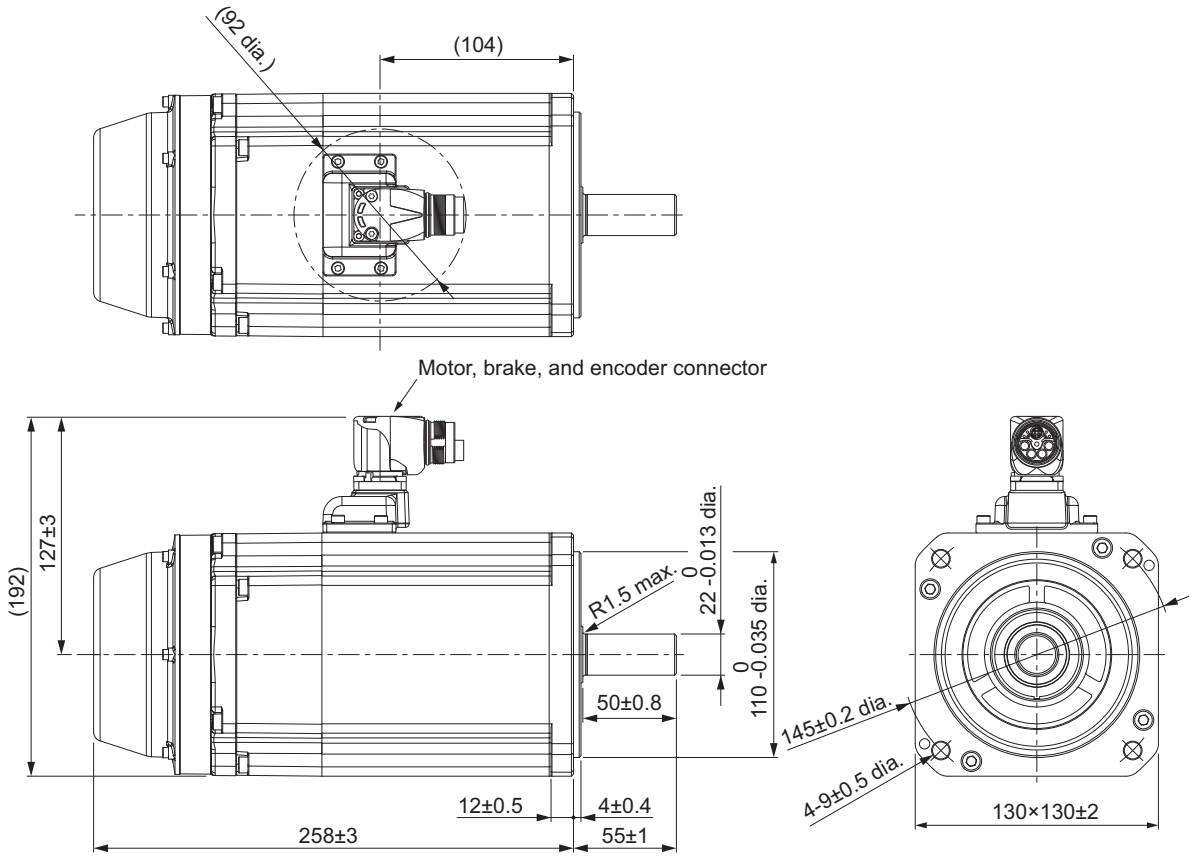

Note The standard shaft type is a straight shaft. Models with a key and tap are indicated with “S2” at the end of the model number.
Models with an oil seal are indicated with “O” at the end of the model number.

Shaft-end with key and tap

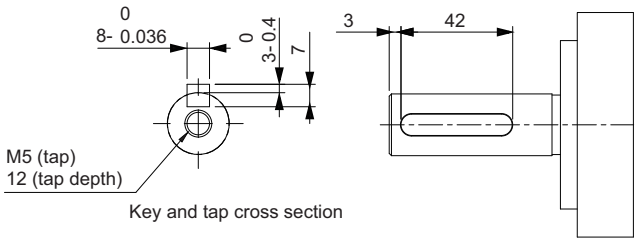

1,500-r/min Servomotors (200 V/400 V)

● 1.5 kW (without Brake)

R88M-1AM1K515T(-O/-S2/-OS2)

R88M-1AM1K515C(-O/-S2/-OS2)

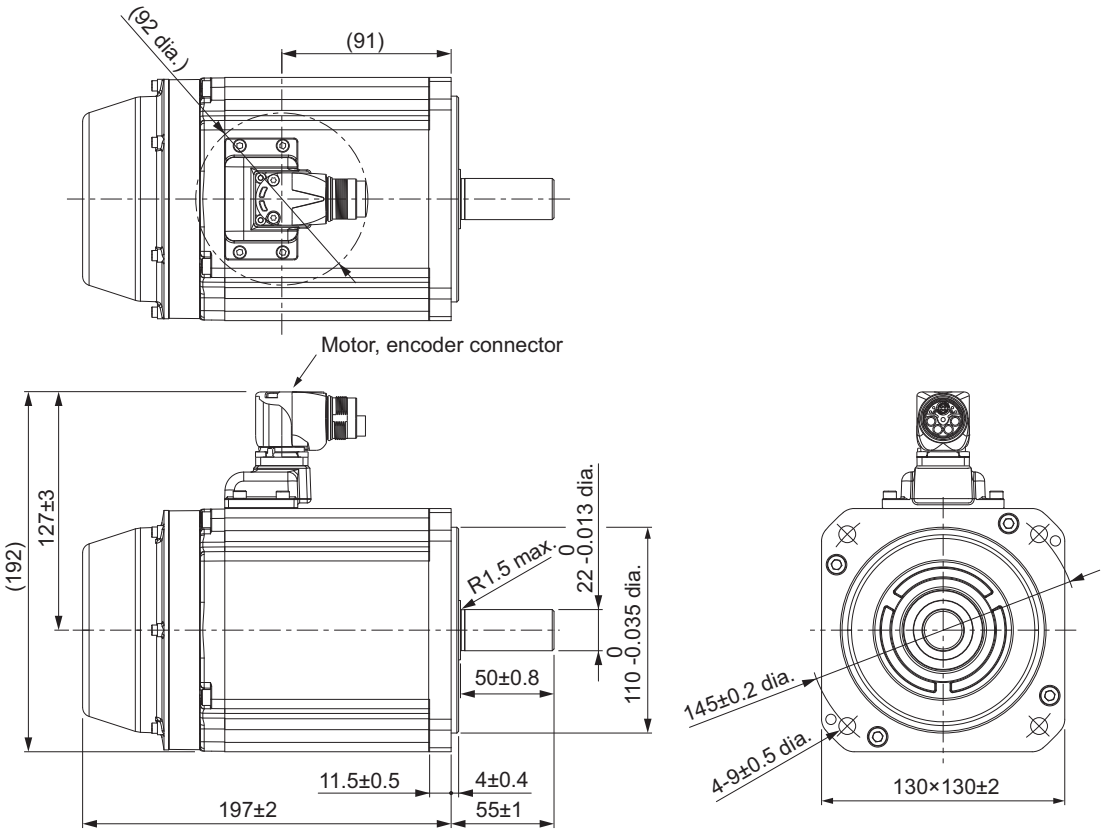

Note The standard shaft type is a straight shaft. Models with a key and tap are indicated with “S2” at the end of the model number.
Models with an oil seal are indicated with “O” at the end of the model number.

Shaft-end with key and tap

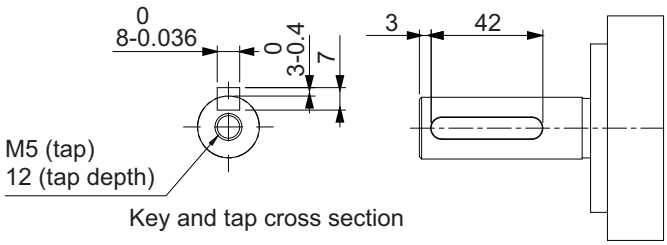

● 1.5 kW (with Brake)

R88M-1AM1K515T-B(O/S2/OS2)

R88M-1AM1K515C-B(O/S2/OS2)

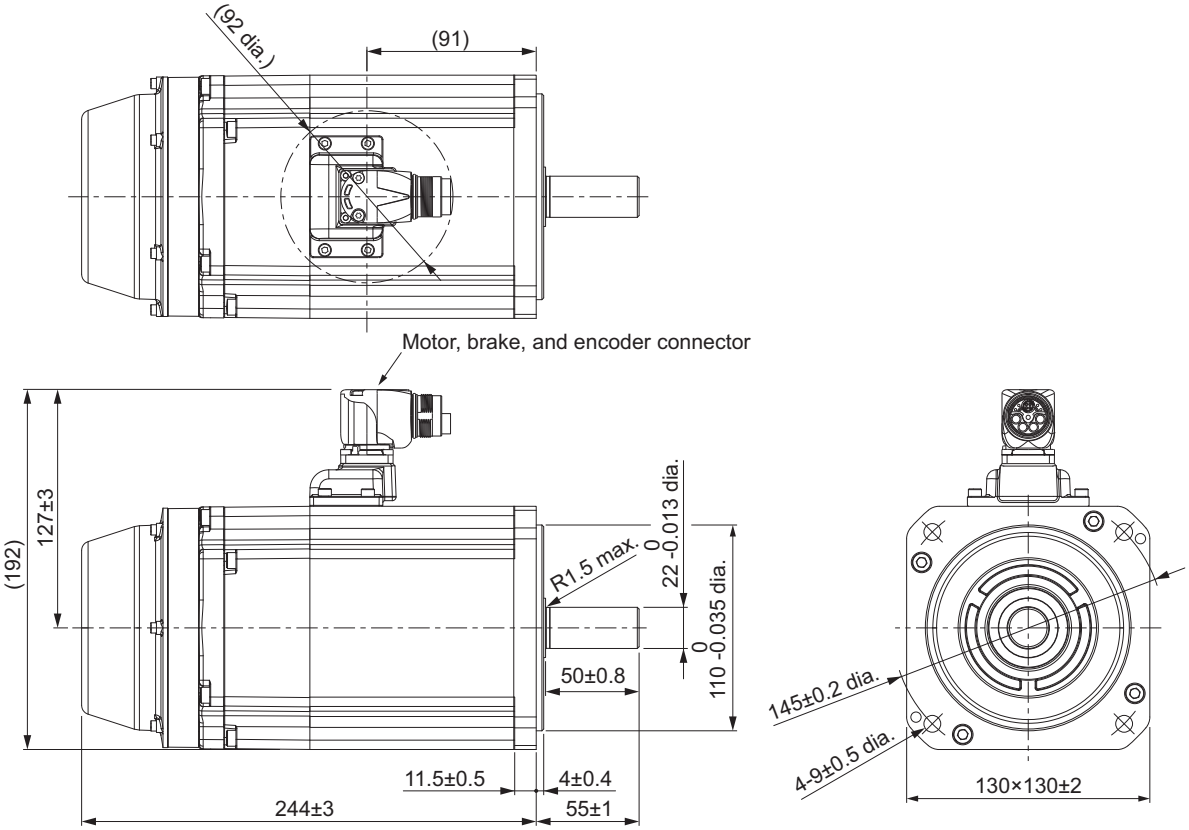

Note The standard shaft type is a straight shaft. Models with a key and tap are indicated with “S2” at the end of the model number.
Models with an oil seal are indicated with “O” at the end of the model number.

Shaft-end with key and tap

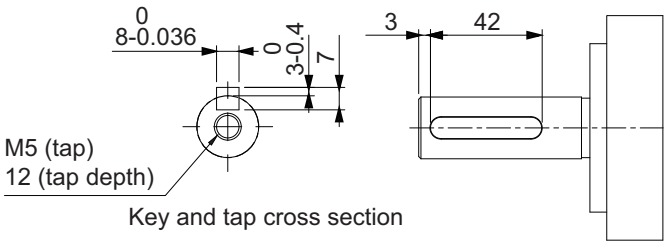

● 2.7 kW/3 kW (without Brake)

R88M-1AM2K715T(-O/-S2/-OS2)

R88M-1AM3K015C(-O/-S2/-OS2)

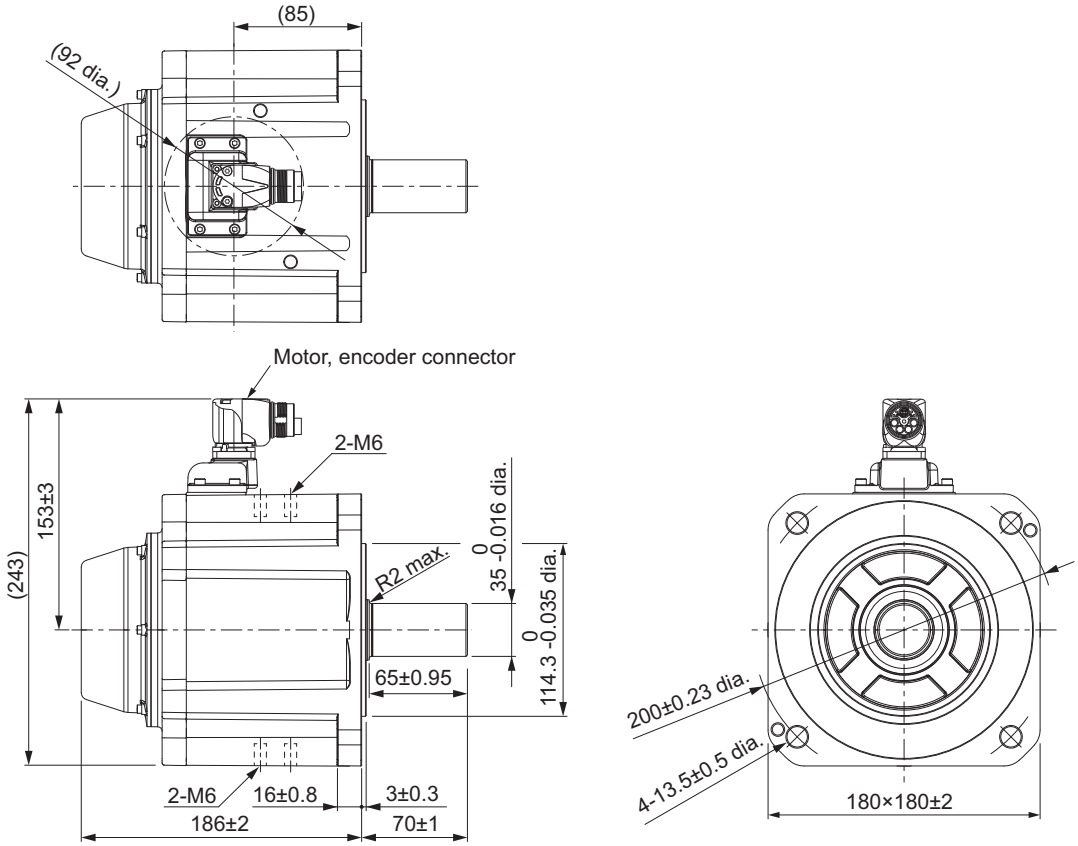

Note The standard shaft type is a straight shaft. Models with a key and tap are indicated with “S2” at the end of the model number.
Models with an oil seal are indicated with “O” at the end of the model number.

Shaft-end with key and tap

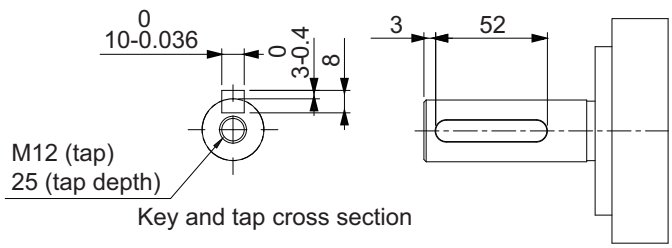

● 2.7 kW/3 kW (with Brake)

R88M-1AM2K715T-B(O/S2/OS2)

R88M-1AM3K015C-B(O/S2/OS2)

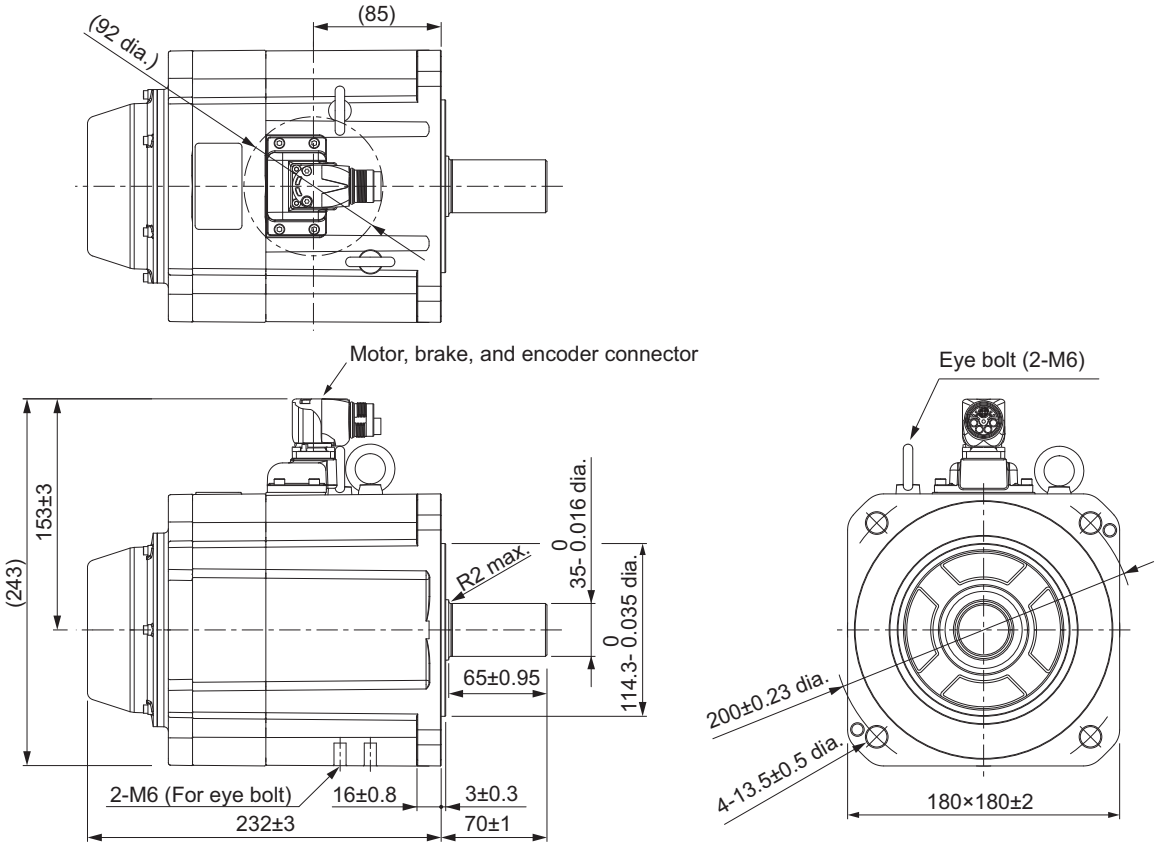

Note The standard shaft type is a straight shaft. Models with a key and tap are indicated with “S2” at the end of the model number.
Models with an oil seal are indicated with “O” at the end of the model number.

Shaft-end with key and tap

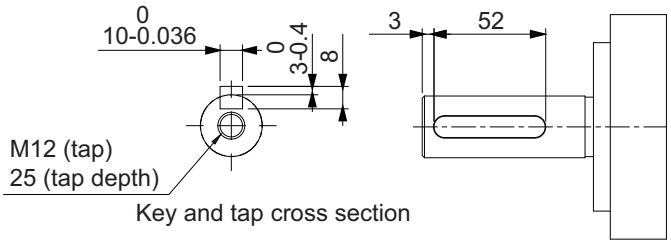

2-4-3 Cable Outlet Direction of Integrated Connector

This section describes the movable range and the dead angle when the integrated connector in the Servomotor rotates.

The cable outlet direction of the integrated connector. The below shows the selectable range.
The change of the cable outlet direction shall be up to five times. For a procedure of the change of the cable outlet direction, refer to *4-2-3 Procedure for Attaching an Integrated Connector* on page 4-29.

Cable Outlet Direction for Connector Type M17

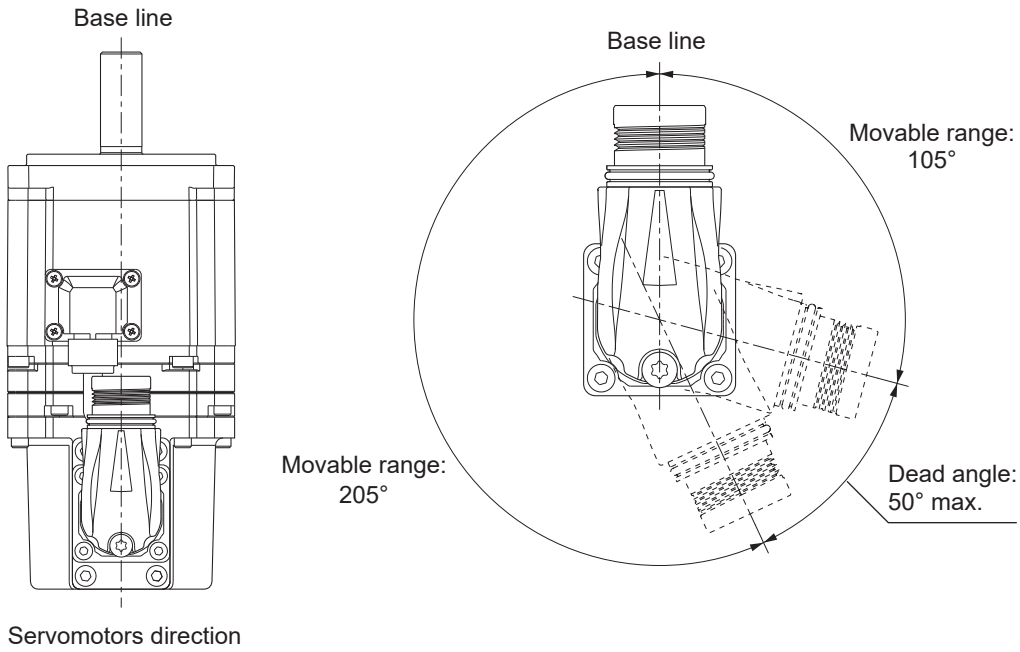

Cable Outlet Direction for Connector Type M23

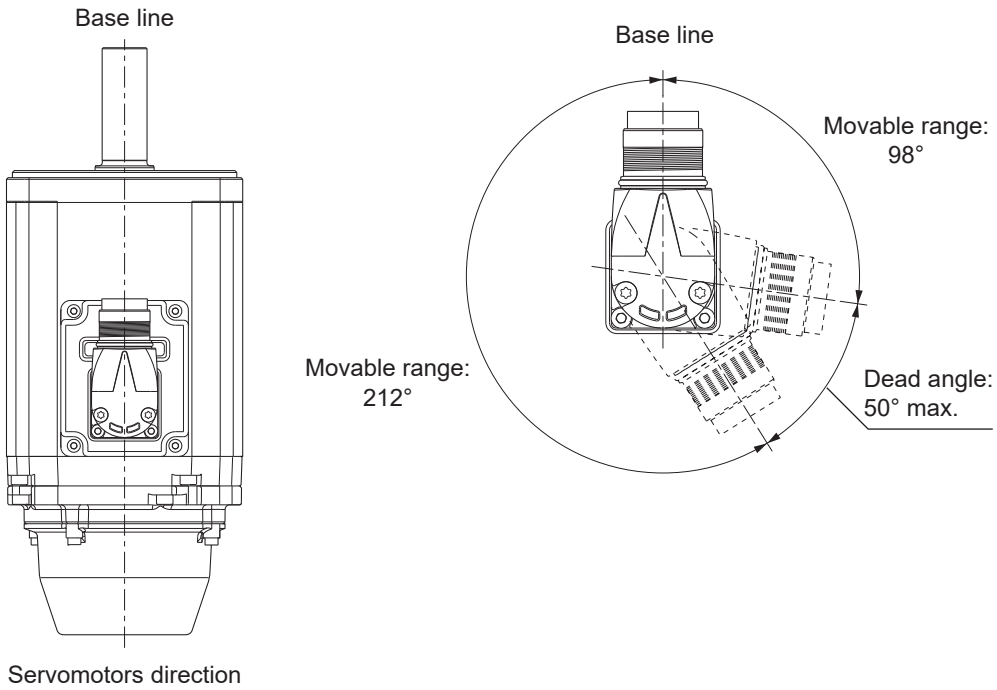

2-4-4 Cable Wiring Dimension for a Case of Servomotor Installing

The integrated cable wiring dimensions are shown below the table according to connector type for Servomotors.

The dimensions from the rotation center of the integrated connector to the integrated cable surrounding are indicated as A when you wire a cable with the minimum bending radius (ten times as outer dimension of sheath wire).

Servomotor for Connector Type M17

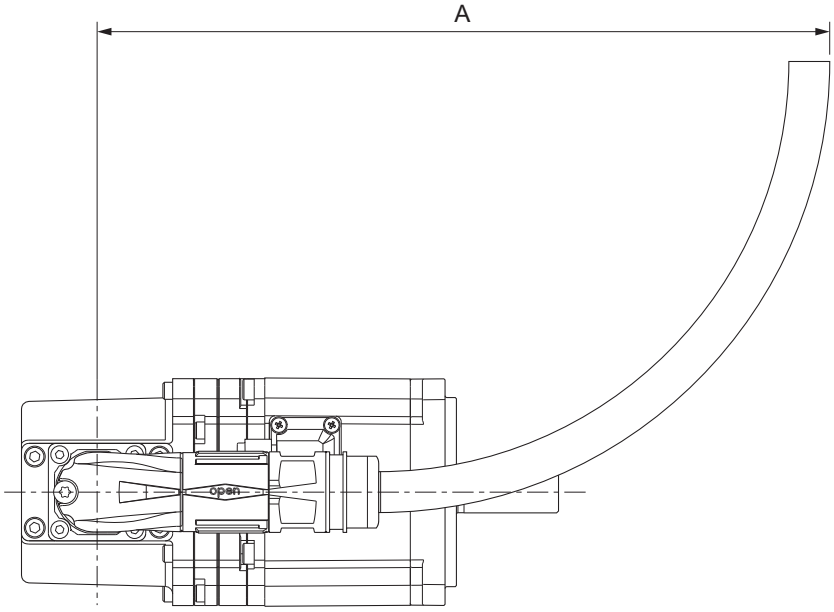

Model	Dimensions [mm]
	A
R88M-1AM20030T(-O/-S2/-OS2)	210
R88M-1AM40030T(-O/-S2/-OS2)	
R88M-1AM75030T(-O/-S2/-OS2)	
R88M-1AM20030T-B(O/S2/OS2)	
R88M-1AM40030T-B(O/S2/OS2)	
R88M-1AM75030T-B(O/S2/OS2)	

Servomotor for Connector Type M23

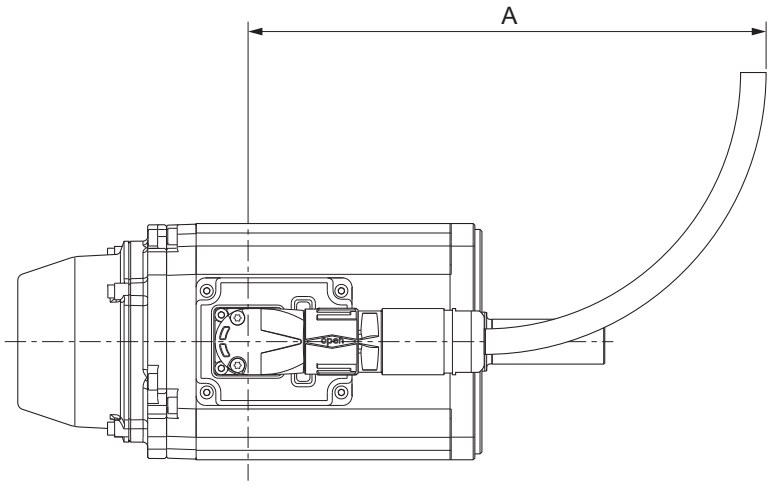

Model	Dimensions [mm]
	A
R88M-1AL75030C(-S2/-O/-OS2/-B/-BS2/-BO/-BOS2)	270
R88M-1AL1K030T(-S2/-O/-OS2/-B/-BS2/-BO/-BOS2)	
R88M-1AL1K030C(-S2/-O/-OS2/-B/-BS2/-BO/-BOS2)	
R88M-1AL1K530T(-S2/-O/-OS2/-B/-BS2/-BO/-BOS2)	
R88M-1AL1K530C(-S2/-O/-OS2/-B/-BS2/-BO/-BOS2)	
R88M-1AL2K030T(-S2/-O/-OS2/-B/-BS2/-BO/-BOS2)	
R88M-1AL2K030C(-S2/-O/-OS2/-B/-BS2/-BO/-BOS2)	
R88M-1AL2K630T(-S2/-O/-OS2/-B/-BS2/-BO/-BOS2)	
R88M-1AL3K030C(-S2/-O/-OS2/-B/-BS2/-BO/-BOS2	
R88M-1AM1K515T(-S2/-O/-OS2/-B/-BS2/-BO/-BOS2)	
R88M-1AM1K515C(-S2/-O/-OS2/-B/-BS2/-BO/-BOS2)	
R88M-1AM2K715T(-S2/-O/-OS2/-B/-BS2/-BO/-BOS2)	
R88M-1AM3K015C(-S2/-O/-OS2/-B/-BS2/-BO/-BOS2)	

2-4-5 Decelerator Dimensions

The following tables show the dimensions of Decelerators.

Backlash: 3 Arcminutes Max.

● For 3,000-r/min Servomotors (200 W to 750W)

Servo-motor rated output	Reduc-tion ratio	Model	Outline drawing	Dimensions [mm]												
				LM	LR	C1	C2	D1	D2	D3	D4	D5	D6*1	E	F1	F2
200 W	1/5	R88G-HPG14A05200B□	1	64.0	58	60	60×60	70	70	56	55.5	40	---	37	2.5	21
	1/11	R88G-HPG14A11200B□	1	64.0	58	60	60×60	70	70	56	55.5	40	---	37	2.5	21
	1/21	R88G-HPG20A21200B□	2	71.0	80	90	89 dia.	105	70	85	84	59	---	53	7.5	27
	1/33	R88G-HPG20A33200B□	2	71.0	80	90	89 dia.	105	70	85	84	59	---	53	7.5	27
	1/45	R88G-HPG20A45200B□	2	71.0	80	90	89 dia.	105	70	85	84	59	---	53	7.5	27
400 W	1/5	R88G-HPG14A05400B□	1	64	58	60	60×60	70	70	56	55.5	40	---	37	2.5	21
	1/11	R88G-HPG20A11400B□	2	71	80	90	89 dia.	105	70	85	84	59	---	53	7.5	27
	1/21	R88G-HPG20A21400B□	2	71	80	90	89 dia.	105	70	85	84	59	---	53	7.5	27
	1/33	R88G-HPG32A33400B□	2	104	133	120	122 dia.	135	70	115	114	84	---	98	12.5	35
	1/45	R88G-HPG32A45400B□	2	104	133	120	122 dia.	135	70	115	114	84	---	98	12.5	35
750 W (200 V)	1/5	R88G-HPG20A05750B□	1	78	80	90	80×80	105	90	85	84	59	89	53	7.5	27
	1/11	R88G-HPG20A11750B□	1	78	80	90	80×80	105	90	85	84	59	89	53	7.5	27
	1/21	R88G-HPG32A21750B□	2	104	133	120	122 dia.	135	90	115	114	84	---	98	12.5	35
	1/33	R88G-HPG32A33750B□	2	104	133	120	122 dia.	135	90	115	114	84	---	98	12.5	35
	1/45	R88G-HPG32A45750B□	2	104	133	120	122 dia.	135	90	115	114	84	---	98	12.5	35
750 W (400 V)	1/5	R88G-HPG32A052K0B□	2	110	133	120	135 dia.	135	115	115	114	84	---	98	12.5	35
	1/11	R88G-HPG32A112K0B□	2	110	133	120	135 dia.	135	115	115	114	84	---	98	12.5	35
	1/21	R88G-HPG32A211K5B□	2	110	133	120	135 dia.	135	115	115	114	84	---	98	12.5	35
	1/33	R88G-HPG32A33600SB□	2	110	133	120	135 dia.	135	115	115	114	84	---	98	12.5	35

Servo-motor rated output	Reduc-tion ratio	Model	Dimensions [mm]											
			G	S	T	Z1	Z2	AT*2	Key				Tap	
									QK	b	h	t1	M	L
200 W	1/5	R88G-HPG14A05200B□	8	16	28	5.5	M4 × 10	M4	25	5	5	3	M4	8
	1/11	R88G-HPG14A11200B□	8	16	28	5.5	M4 × 10	M4	25	5	5	3	M4	8
	1/21	R88G-HPG20A21200B□	10	25	42	9	M4 × 10	M4	36	8	7	4	M6	12
	1/33	R88G-HPG20A33200B□	10	25	42	9	M4 × 10	M4	36	8	7	4	M6	12
	1/45	R88G-HPG20A45200B□	10	25	42	9	M4 × 10	M4	36	8	7	4	M6	12
400 W	1/5	R88G-HPG14A05400B□	8	16	28	5.5	M4 × 10	M4	25	5	5	3	M4	8
	1/11	R88G-HPG20A11400B□	10	25	42	9	M4 × 10	M4	36	8	7	4	M6	12
	1/21	R88G-HPG20A21400B□	10	25	42	9	M4 × 10	M4	36	8	7	4	M6	12
	1/33	R88G-HPG32A33400B□	13	40	82	11	M4 × 10	M4	70	12	8	5	M10	20
	1/45	R88G-HPG32A45400B□	13	40	82	11	M4 × 10	M4	70	12	8	5	M10	20
750 W (200 V)	1/5	R88G-HPG20A05750B□	10	25	42	9	M5 × 12	M4	36	8	7	4	M6	12
	1/11	R88G-HPG20A11750B□	10	25	42	9	M5 × 12	M4	36	8	7	4	M6	12
	1/21	R88G-HPG32A21750B□	13	40	82	11	M5 × 12	M6	70	12	8	5	M10	20
	1/33	R88G-HPG32A33750B□	13	40	82	11	M5 × 12	M6	70	12	8	5	M10	20
	1/45	R88G-HPG32A45750B□	13	40	82	11	M5 × 12	M6	70	12	8	5	M10	20
750 W (400 V)	1/5	R88G-HPG32A052K0B□	13	40	82	11	M8 × 10	M6	70	12	8	5	M10	20
	1/11	R88G-HPG32A112K0B□	13	40	82	11	M8 × 10	M6	70	12	8	5	M10	20
	1/21	R88G-HPG32A211K5B□	13	40	82	11	M8 × 10	M6	70	12	8	5	M10	20
	1/33	R88G-HPG32A33600SB□	13	40	82	11	M8 × 10	M6	70	12	8	5	M10	20

*1. D6 is the maximum diameter of the decelerator body between the flange side and Servomotor side. (Refer to the Outline Drawing) The value is given only when the diameter is larger than the diameters of these two sides. Take heed of this when you mount the decelerator to the machine.

*2. Indicates set bolt.

Note 1. The standard shaft type is a straight shaft.

2. A model with a key and tap is indicated with “J” at □ of the model number. (Example: R88G-HPG14A05200BJ)

3. The diameter of the motor shaft insertion hole is the same as the shaft diameter of the corresponding Servomotor.

4. You cannot use this type of Decelerator for the Servomotor with key.

5. The dimensional drawings in this document are for showing main dimensions only, and they do not give the details of the product shape.

● Outline Drawing 1

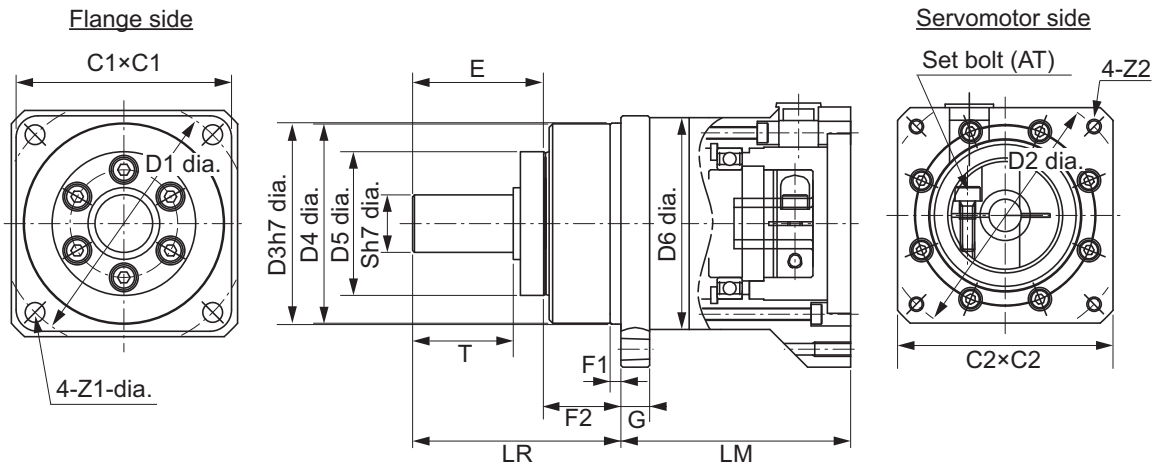

Key and tap dimensions

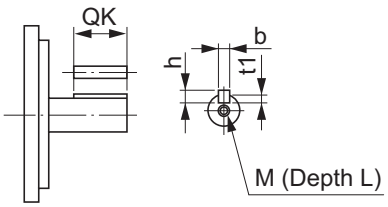

● Outline Drawing 2

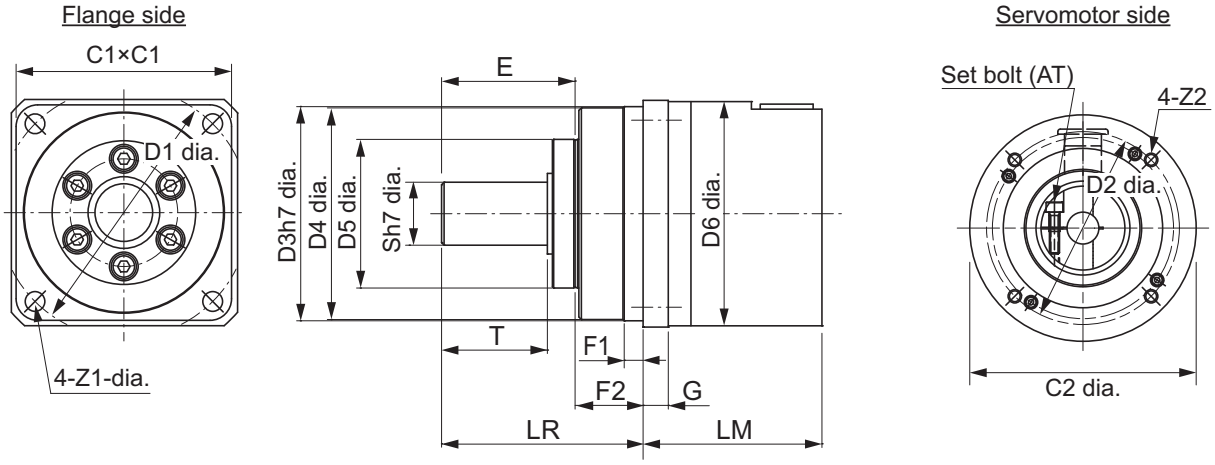

Key and tap dimensions

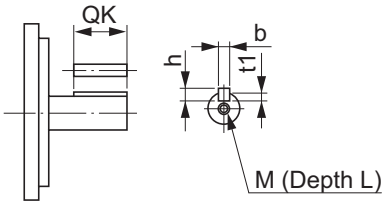

● For 3,000-r/min Servomotors (1 to 3 kW)

Servo-motor rated output	Re-duc-tion ratio	Model	Outline drawing	Dimensions [mm]												
				LM	LR	C1	C2	D1	D2	D3	D4	D5	D6*1	E	F1	F2
1 kW	1/5	R88G-HPG32A052K0B□	2	110	133	120	135 dia.	135	115	115	114	84	---	98	12.5	35
	1/11	R88G-HPG32A112K0B□	2	110	133	120	135 dia.	135	115	115	114	84	---	98	12.5	35
	1/21	R88G-HPG32A211K5B□	2	110	133	120	135 dia.	135	115	115	114	84	---	98	12.5	35
1.5 kW	1/5	R88G-HPG32A052K0B□	2	110	133	120	135 dia.	135	115	115	114	84	---	98	12.5	35
	1/11	R88G-HPG32A112K0B□	2	110	133	120	135 dia.	135	115	115	114	84	---	98	12.5	35
	1/21	R88G-HPG32A211K5B□	2	110	133	120	135 dia.	135	115	115	114	84	---	98	12.5	35
2 kW	1/5	R88G-HPG32A052K0B□	2	110	133	120	135 dia.	135	115	115	114	84	---	98	12.5	35
	1/11	R88G-HPG32A112K0B□	2	110	133	120	135 dia.	135	115	115	114	84	---	98	12.5	35
2.6 kW (200V) 3 kW (400V)	1/5	R88G-HPG32A053K0B□	1	107	133	120	130×130	135	145	115	114	84	---	98	12.5	35

Servo-motor rated output	Re-duc-tion ratio	Model	Dimensions [mm]											
			G	S	T	Z1	Z2	AT*2	Key				Tap	
									QK	b	h	t1	M	L
1 kW	1/5	R88G-HPG32A052K0B□	13	40	82	11	M8 × 10	M6	70	12	8	5	M10	20
	1/11	R88G-HPG32A112K0B□	13	40	82	11	M8 × 10	M6	70	12	8	5	M10	20
	1/21	R88G-HPG32A211K5B□	13	40	82	11	M8 × 10	M6	70	12	8	5	M10	20
1.5 kW	1/5	R88G-HPG32A052K0B□	13	40	82	11	M8 × 10	M6	70	12	8	5	M10	20
	1/11	R88G-HPG32A112K0B□	13	40	82	11	M8 × 10	M6	70	12	8	5	M10	20
	1/21	R88G-HPG32A211K5B□	13	40	82	11	M8 × 10	M6	70	12	8	5	M10	20
2 kW	1/5	R88G-HPG32A052K0B□	13	40	82	11	M8 × 10	M6	70	12	8	5	M10	20
	1/11	R88G-HPG32A112K0B□	13	40	82	11	M8 × 10	M6	70	12	8	5	M10	20
2.6 kW (200V) 3 kW (400V)	1/5	R88G-HPG32A053K0B□	13	40	82	11	M8 × 18	M6	70	12	8	5	M10	20

*1. D6 is the maximum diameter of the decelerator body between the flange side and Servomotor side. (Refer to the Outline Drawing) The value is given only when the diameter is larger than the diameters of these two sides. Take heed of this when you mount the decelerator to the machine.

*2. Indicates set bolt.

Note 1. The standard shaft type is a straight shaft.

2. A model with a key and tap is indicated with “J” at □ of the model number. (Example: R88G-HPG32A052K0BJ)

3. The diameter of the motor shaft insertion hole is the same as the shaft diameter of the corresponding Servomotor.

4. You cannot use this type of Decelerator for the Servomotor with key.

5. The dimensional drawings in this document are for showing main dimensions only, and they do not give the details of the product shape.

● Outline Drawing 1

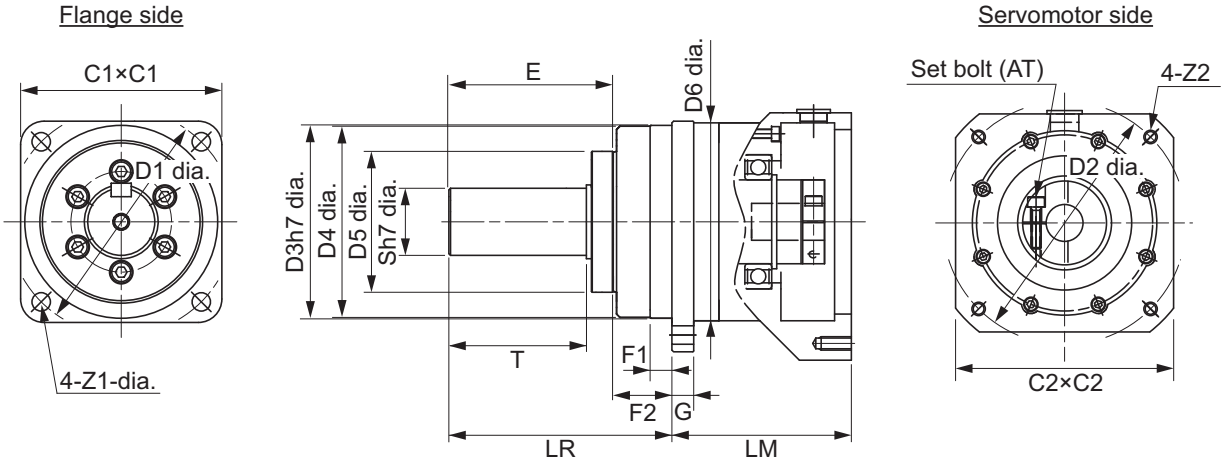

Key and tap dimensions

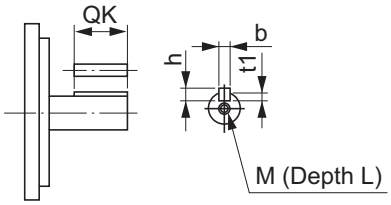

● Outline Drawing 2

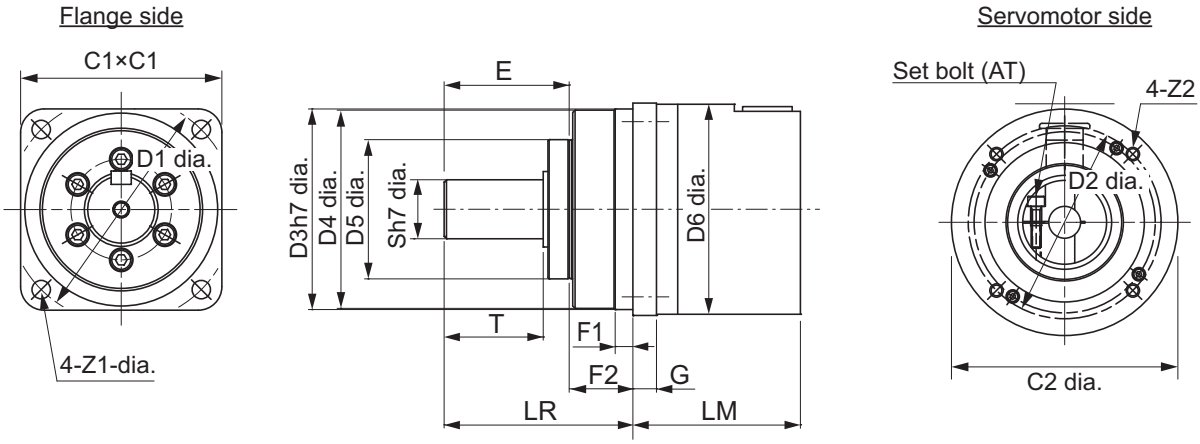

Key and tap dimensions

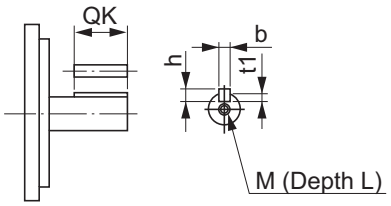

● For 1,500-r/min Servomotors (1.5 to 3 kW)

Servo-motor rated output	Re-duc-tion ratio	Model	Outline drawing	Dimensions [mm]												
				LM	LR	C1	C2	D1	D2	D3	D4	D5	D6*1	E	F1	F2
1.5 kW	1/5	R88G-HPG32A053K0B□	1	107	133	120	130×130	135	145	115	114	84	---	98	12.5	35
	1/11	R88G-HPG32A112K0SB□	1	107	133	120	130×130	135	145	115	114	84	---	98	12.5	35
	1/21	R88G-HPG50A21900TB□	1	149	156	170	130×130	190	145	165	163	122	170	103	12	53
	1/33	R88G-HPG50A33900TB□	1	149	156	170	130×130	190	145	165	163	122	170	103	12	53
2.7 kW (200V) 3 kW (400V)	1/5	R88G-HPG50A055K0SB□	1	149	156	170	180×180	190	200	165	163	122	---	103	12	53
	1/11	R88G-HPG50A115K0SB□	1	149	156	170	180×180	190	200	165	163	122	---	103	12	53
	1/20	R88G-HPG65A205K0SB□	1	231	222	230	180×180	260	200	220	214	168	220	165	12	57
	1/25	R88G-HPG65A255K0SB□	1	231	222	230	180×180	260	200	220	214	168	220	165	12	57

Servo-motor rated output	Re-duc-tion ratio	Model	Dimensions [mm]											
			G	S	T	Z1	Z2	AT*2	Key				Tap	
									QK	b	h	t1	M	L
1.5 kW	1/5	R88G-HPG32A053K0B□	13	40	82	11	M8 × 18	M6	70	12	8	5	M10	20
	1/11	R88G-HPG32A112K0SB□	13	40	82	11	M8 × 18	M6	70	12	8	5	M10	20
	1/21	R88G-HPG50A21900TB□	16	50	82	14	M8 × 25	M6	70	14	9	5.5	M10	20
	1/33	R88G-HPG50A33900TB□	16	50	82	14	M8 × 25	M6	70	14	9	5.5	M10	20
2.7 kW (200V) 3 kW (400V)	1/5	R88G-HPG50A055K0SB□	16	50	82	14	M12 × 25	M6	70	14	9	5.5	M10	20
	1/11	R88G-HPG50A115K0SB□	16	50	82	14	M12 × 25	M6	70	14	9	5.5	M10	20
	1/20	R88G-HPG65A205K0SB□	25	80	130	18	M12 × 25	M8	110	22	14	9	M16	35
	1/25	R88G-HPG65A255K0SB□	25	80	130	18	M12 × 25	M8	110	22	14	9	M16	35

*1. D6 is the maximum diameter of the decelerator body between the flange side and Servomotor side.
(Refer to the Outline Drawing) The value is given only when the diameter is larger than the diameters of these two sides.
Take heed of this when you mount the decelerator to the machine.

*2. Indicates set bolt.

Note 1. The standard shaft type is a straight shaft.

2. A model with a key and tap is indicated with “J” at □ of the model number. (Example: R88G-HPG32A053K0BJ)

3. The diameter of the motor shaft insertion hole is the same as the shaft diameter of the corresponding Servomotor.

4. You cannot use this type of Decelerator for the Servomotor with key.

5. The dimensional drawings in this document are for showing main dimensions only, and they do not give the details of the product shape.

● Outline Drawing 1

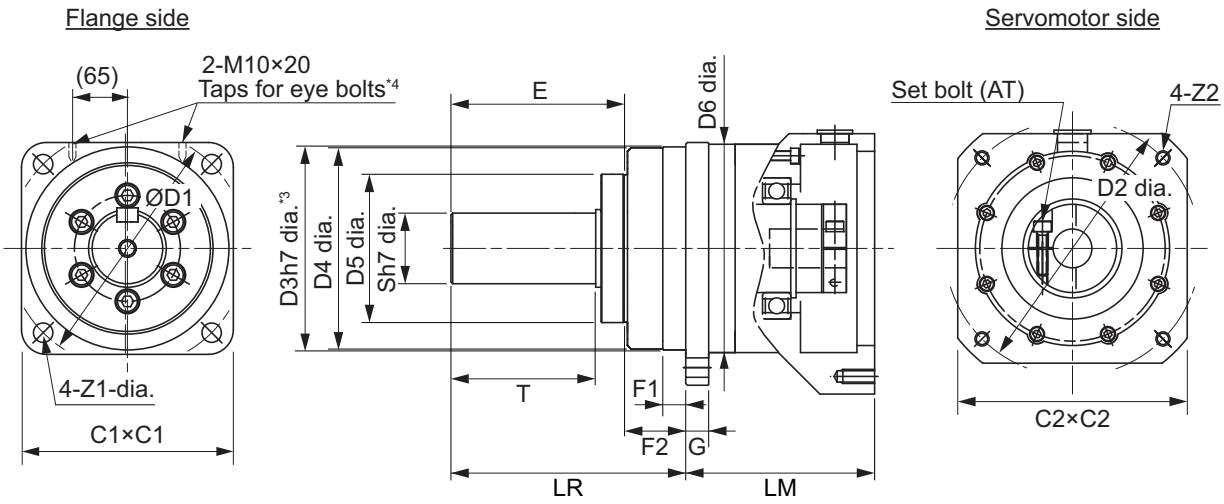

Key and tap dimensions

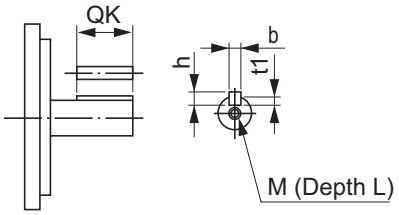

*3. The tolerance is “h8” for R88G-HPG50□ and R88G-HPG65□.
*4. The model R88G-HPG65□ has the taps for eye bolts.

Backlash: 15 Arcminutes Max.

● For 3,000-r/min Servomotors

Model			Dimensions [mm]										
			LM	LR	C1	C2	D1	D2	D3	F	G	S	T
200 W	1/5	R88G-VRXF05B200CJ	72.5	32	60	52	70	60	50	3	10	12	20
	1/9	R88G-VRXF09C200CJ	89.5	50	60	78	70	90	70	3	8	19	30
	1/15	R88G-VRXF15C200CJ	100.0	50	60	78	70	90	70	3	8	19	30
	1/25	R88G-VRXF25C200CJ	100.0	50	60	78	70	90	70	3	8	19	30
400 W	1/5	R88G-VRXF05C400CJ	89.5	50	60	78	70	90	70	3	8	19	30
	1/9	R88G-VRXF09C400CJ	89.5	50	60	78	70	90	70	3	8	19	30
	1/15	R88G-VRXF15C400CJ	100.0	50	60	78	70	90	70	3	8	19	30
	1/25	R88G-VRXF25C400CJ	100.0	50	60	78	70	90	70	3	8	19	30
750 W (200 V)	1/5	R88G-VRXF05C750CJ	93.5	50	80	78	90	90	70	3	10	19	30
	1/9	R88G-VRXF09D750CJ	97.5	61	80	98	90	115	90	5	10	24	40
	1/15	R88G-VRXF15D750CJ	110.0	61	80	98	90	115	90	5	10	24	40
	1/25	R88G-VRXF25D750CJ	110.0	61	80	98	90	115	90	5	10	24	40

Model			Dimensions [mm]									
			Z1	Z2	AT*1	L	Key				Tap	
							QK	b	h	t1	m	l
200 W	1/5	R88G-VRXF05B200CJ	M4	M5	M4	12	16	4	4	2.5	M5	10
	1/9	R88G-VRXF09C200CJ	M4	M6	M5	20	22	6	6	3.5	M6	12
	1/15	R88G-VRXF15C200CJ	M4	M6	M5	20	22	6	6	3.5	M6	12
	1/25	R88G-VRXF25C200CJ	M4	M6	M5	20	22	6	6	3.5	M6	12
400 W	1/5	R88G-VRXF05C400CJ	M4	M6	M5	20	22	6	6	3.5	M6	12
	1/9	R88G-VRXF09C400CJ	M4	M6	M5	20	22	6	6	3.5	M6	12
	1/15	R88G-VRXF15C400CJ	M4	M6	M5	20	22	6	6	3.5	M6	12
	1/25	R88G-VRXF25C400CJ	M4	M6	M5	20	22	6	6	3.5	M6	12
750 W (200 V)	1/5	R88G-VRXF05C750CJ	M5	M6	M6	20	22	6	6	3.5	M6	12
	1/9	R88G-VRXF09D750CJ	M5	M8	M6	20	30	8	7	4	M8	16
	1/15	R88G-VRXF15D750CJ	M5	M8	M6	20	30	8	7	4	M8	16
	1/25	R88G-VRXF25D750CJ	M5	M8	M6	20	30	8	7	4	M8	16

*1. Indicates set bolt.

Note 1. The standard shaft type is a shaft with key and tap.

2. The diameter of the motor shaft insertion hole is the same as the shaft diameter of the corresponding Servomotor.

3. You cannot use this type of Decelerator for the Servomotor with key.

4. The dimensional drawings in this document are for showing main dimensions only, and they do not give the details of the product shape.

● Outline Drawing

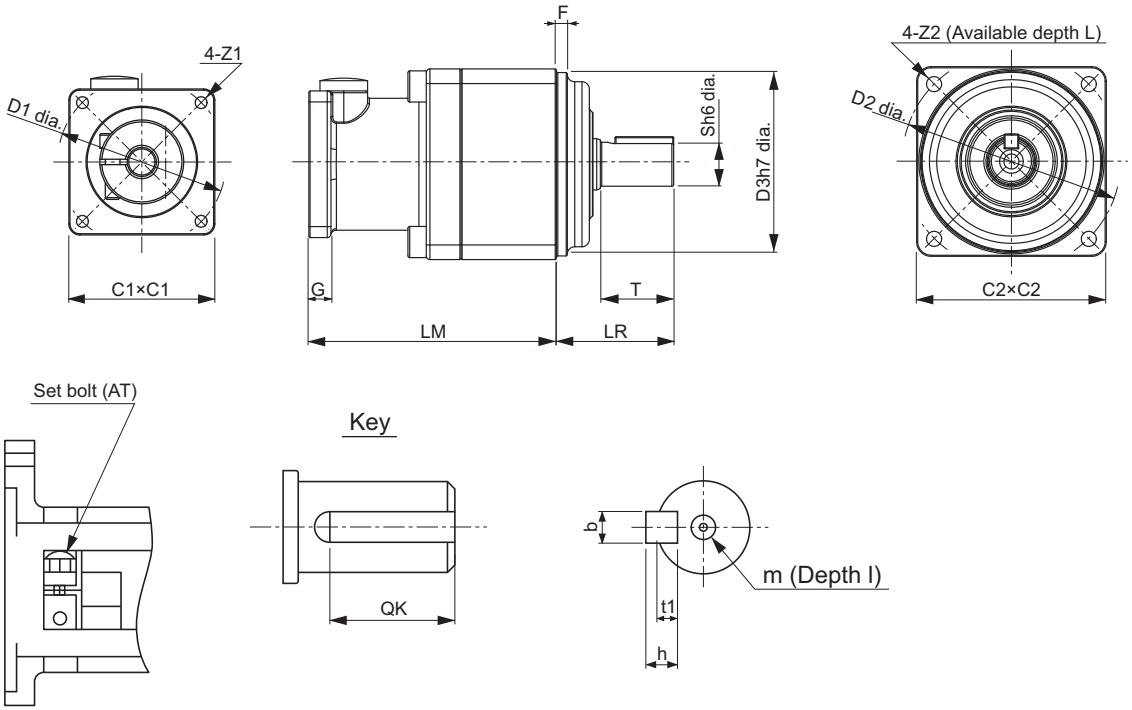

2-4-6 Dimensions of External Regeneration Resistors and External Regeneration Resistance Units

The following are the dimensions of External Regeneration Resistors and External Regeneration Resistance Units.

R88A-RR12025

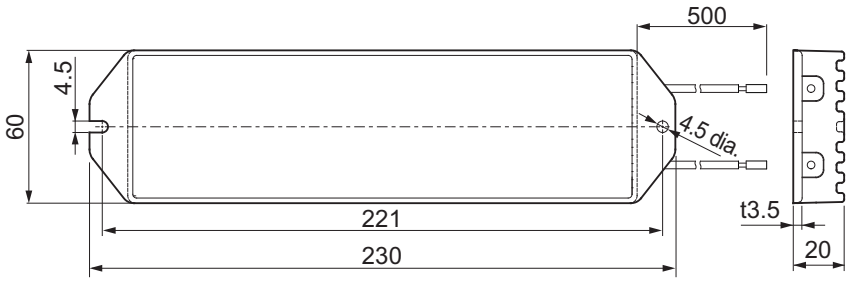

R88A-RR30008/ -RR30010/ -RR30014/ -RR30020/ -RR30025/ -RR30032/ -RR30033/ -RR30054

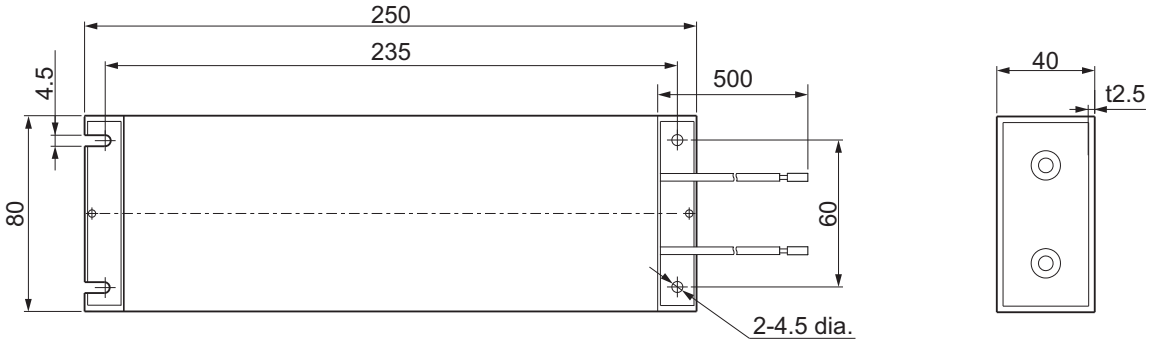

R88A-RR1K608/ -RR1K610/ -RR1K614/ -RR1K620/ -RR1K632/ -RR1K640/ -RR1K654/ -RR1K666

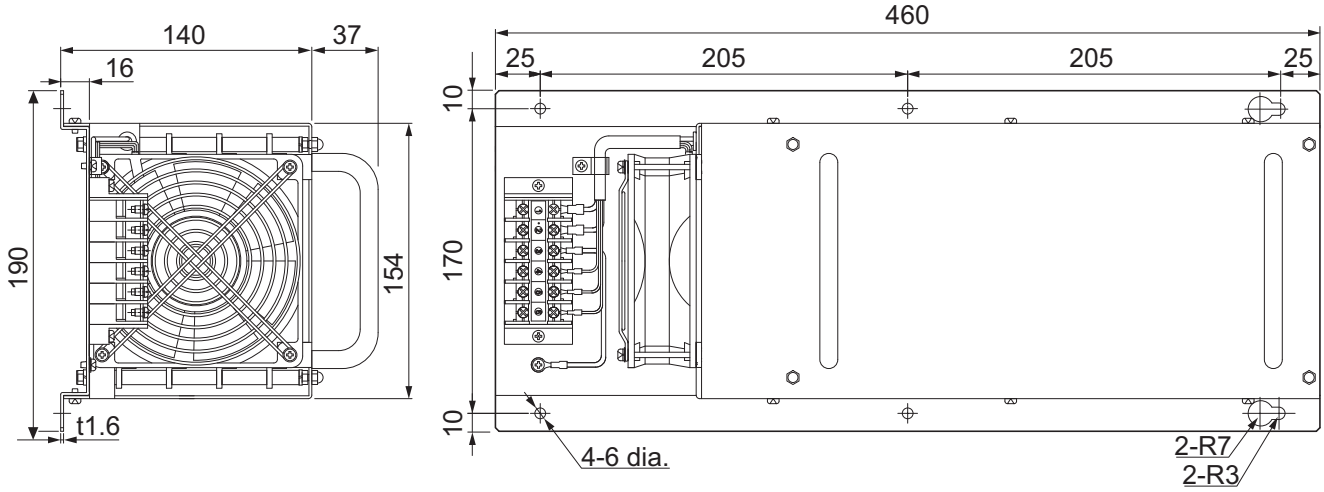

2-4-7 Reactor Dimensions

The following are the dimensions of Reactors.

R88A-PD2002

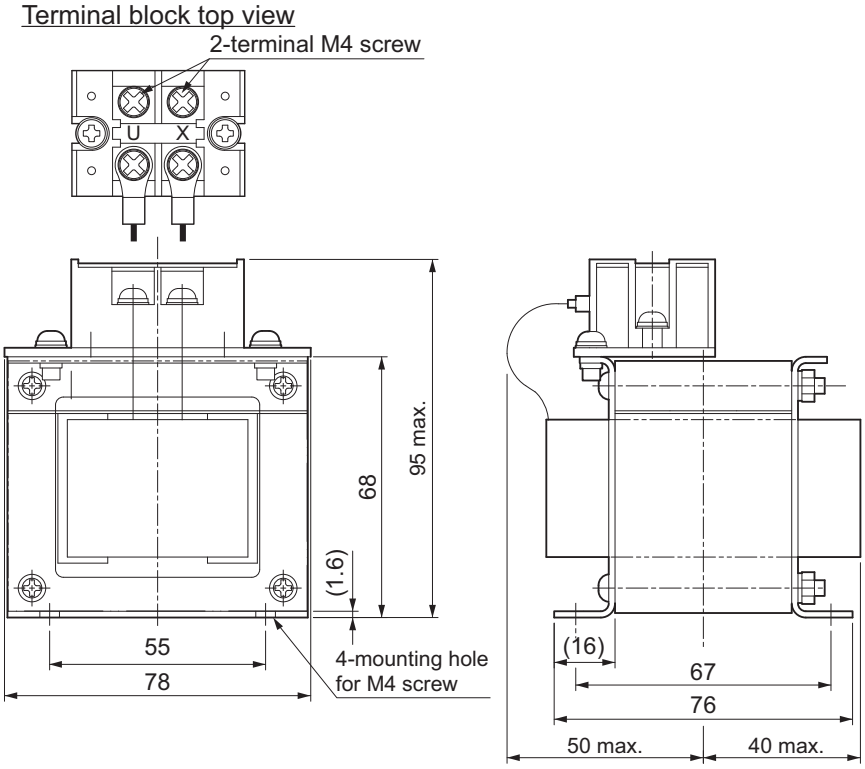

R88A-PD2004

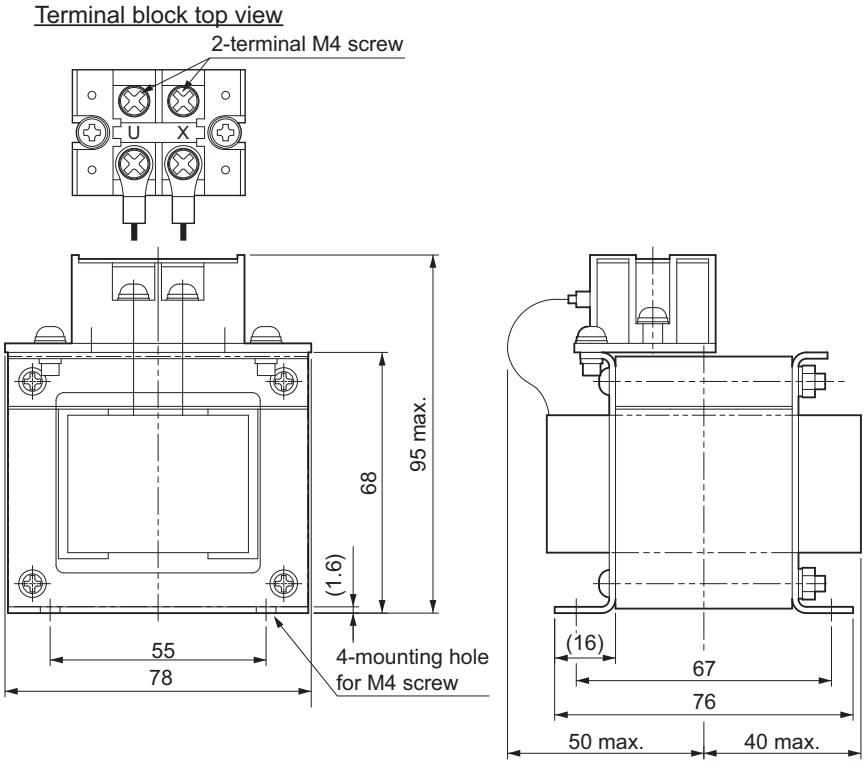

R88A-PD2007

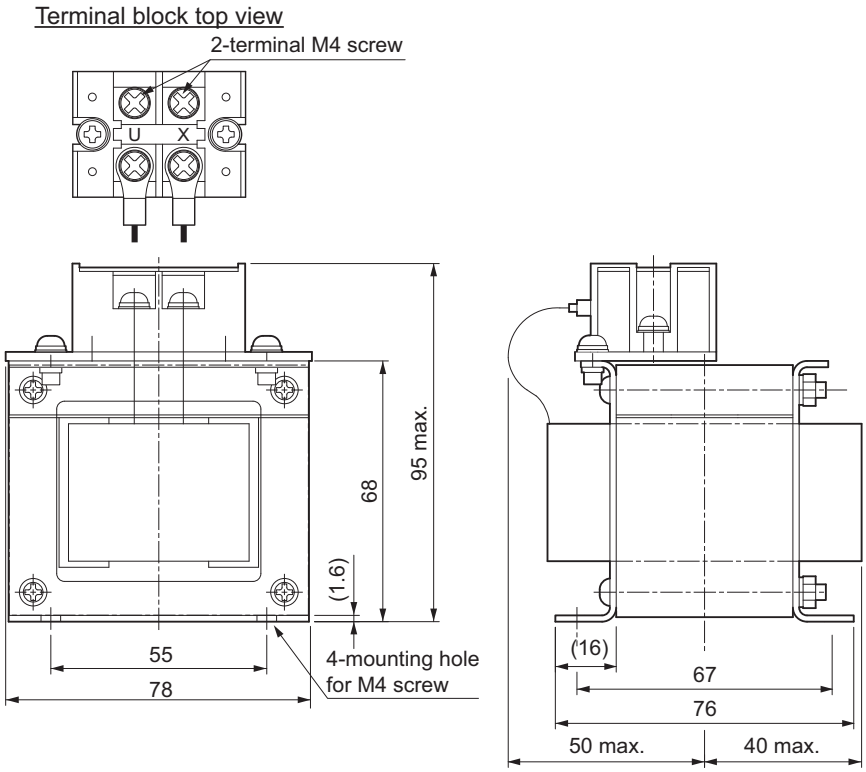

R88A-PD2015

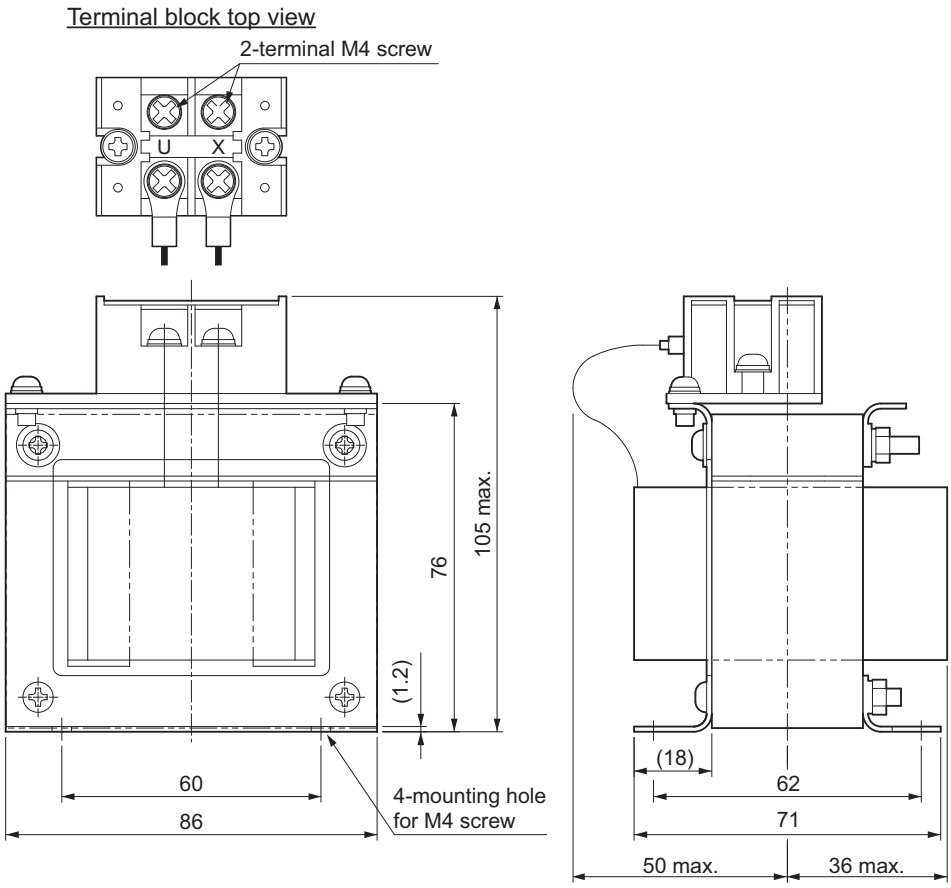

R88A-PD2022

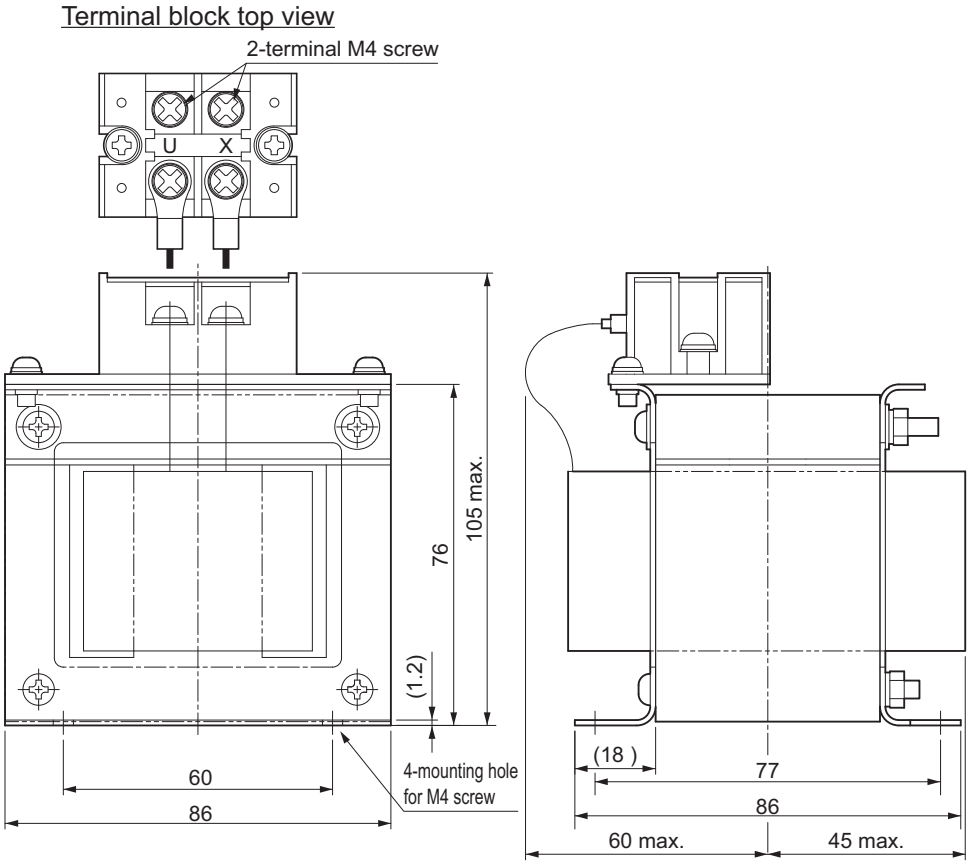

R88A-PD2037

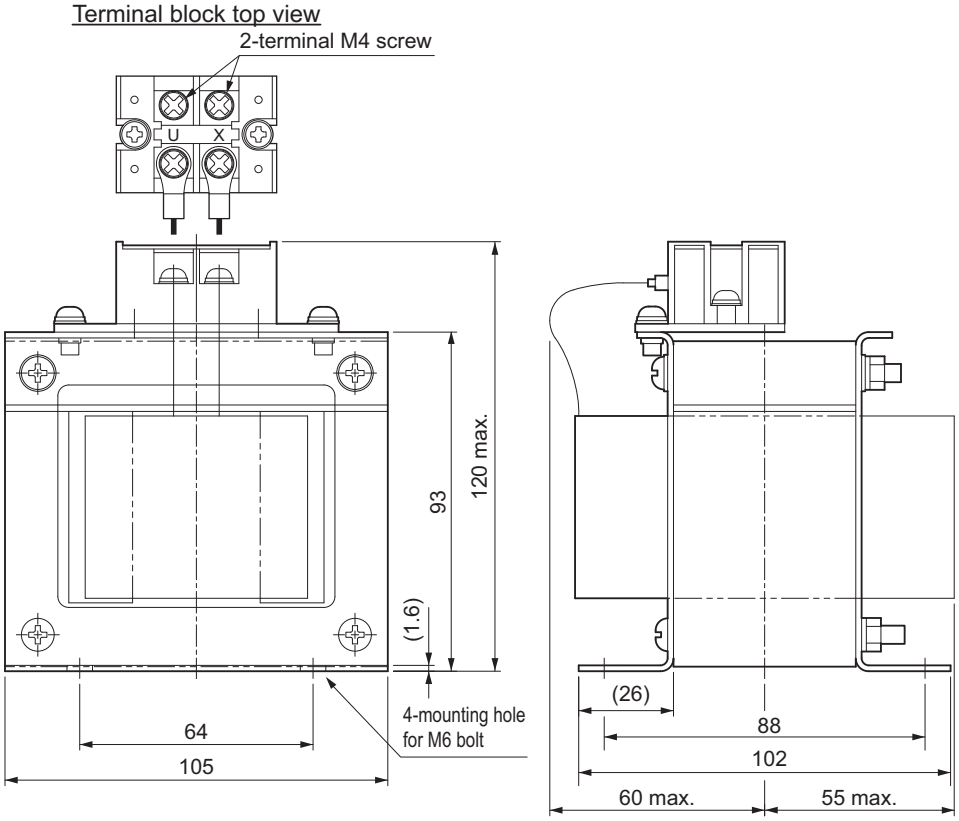

R88A-PD4015

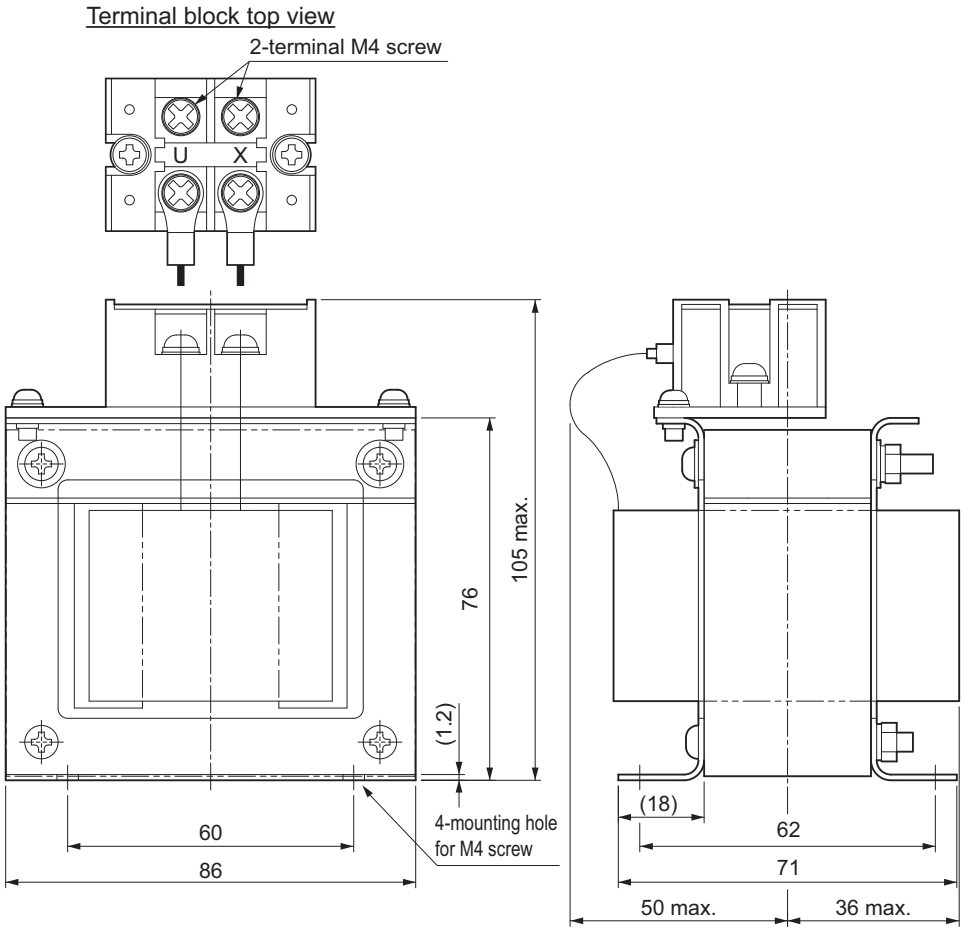
Terminal block top view
2-terminal M4 screw
U
X
105 max.
76
(1.2)
60
86
4-mounting hole
for M4 screw
(18)
62
71
50 max.
36 max.

R88A-PD4022

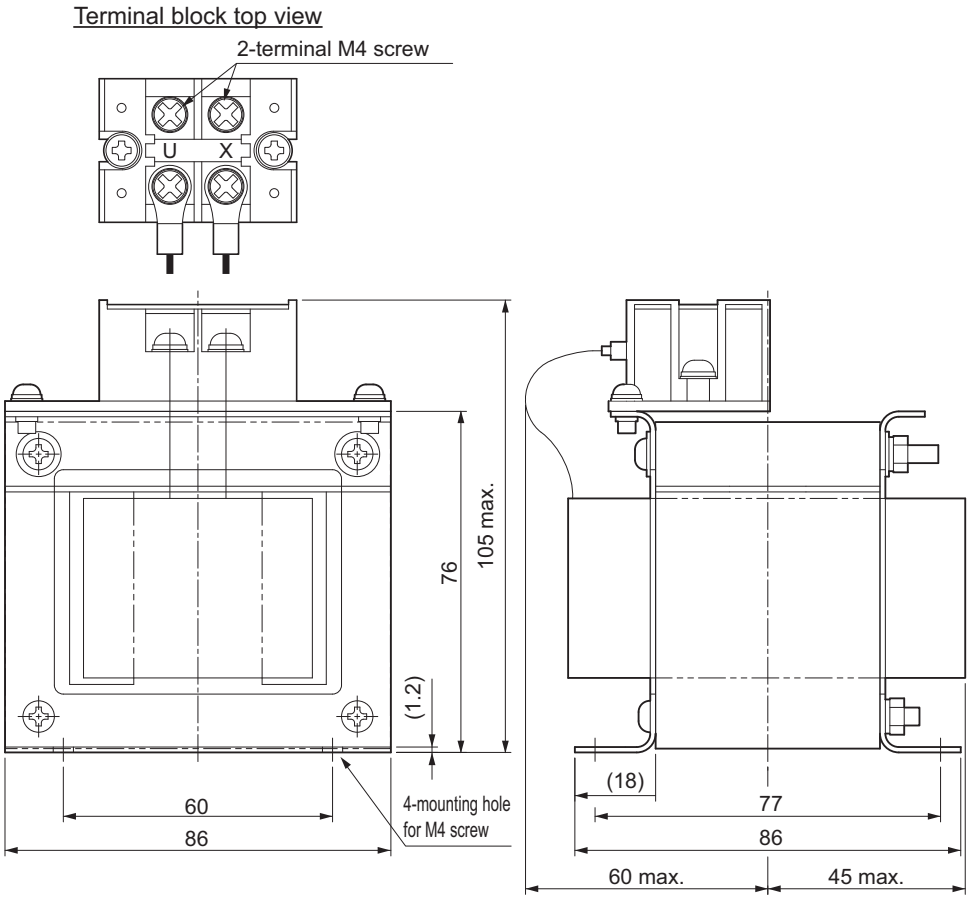
Terminal block top view
2-terminal M4 screw
U
X
105 max.
76
(1.2)
60
86
4-mounting hole
for M4 screw
(18)
77
86
60 max.
45 max.

R88A-PD4037

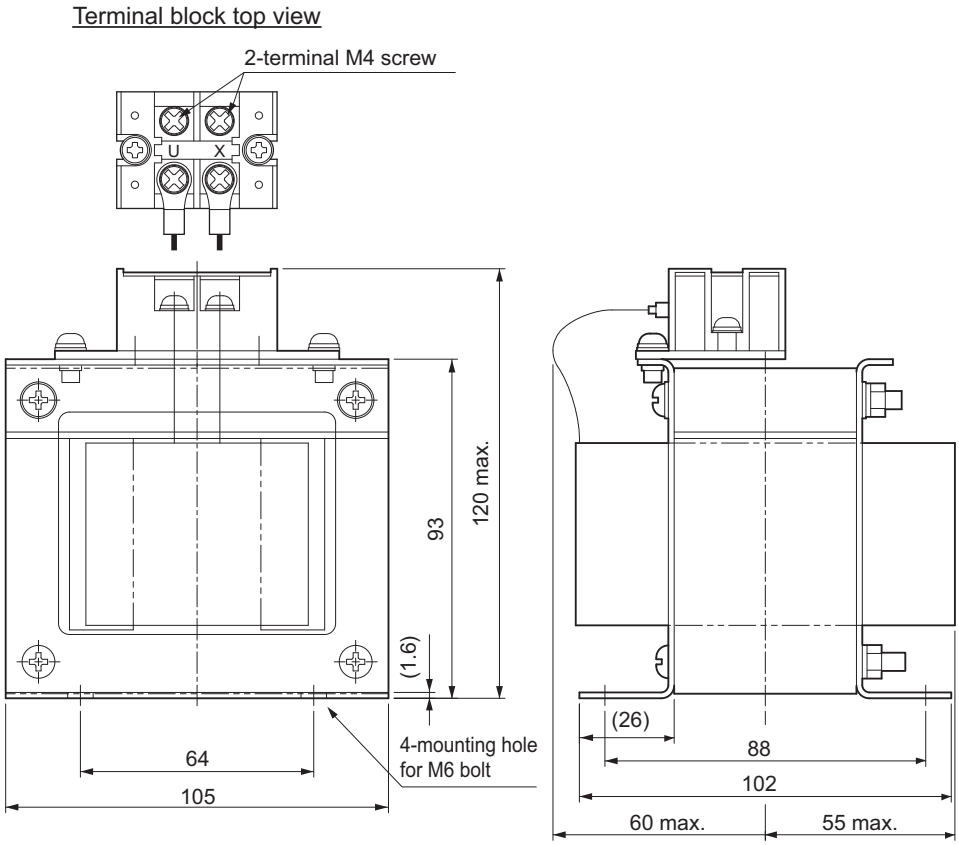
Terminal block top view
2-terminal M4 screw
U
X
93
120 max.
(1.6)
64
105
4-mounting hole
for M6 bolt
(26)
88
102
60 max.
55 max.

2-4-8 Noise Filter Dimensions

The following are the dimensions of Book-type Noise Filters.

HF2020A-SZC-33DDD

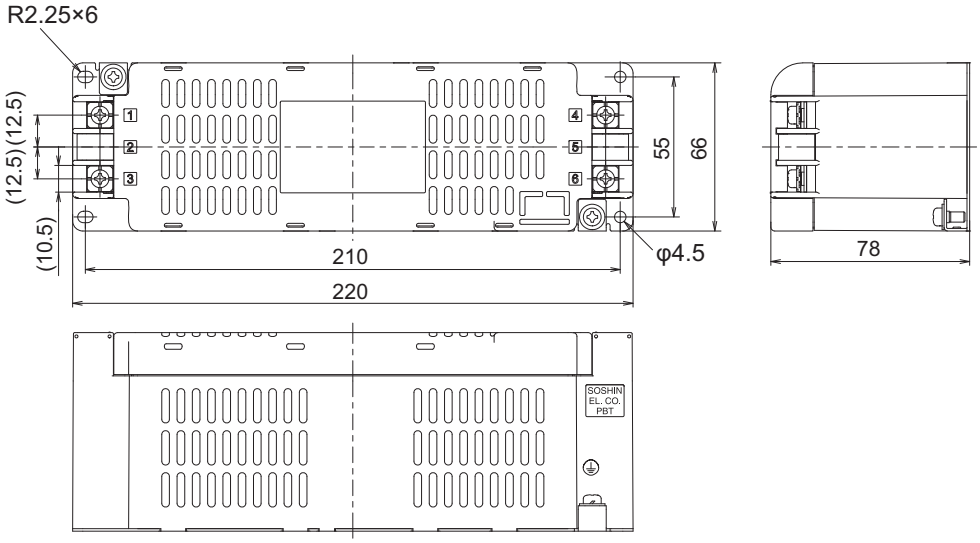

HF3020C-SZC-33DDD/HF3020C-SZL

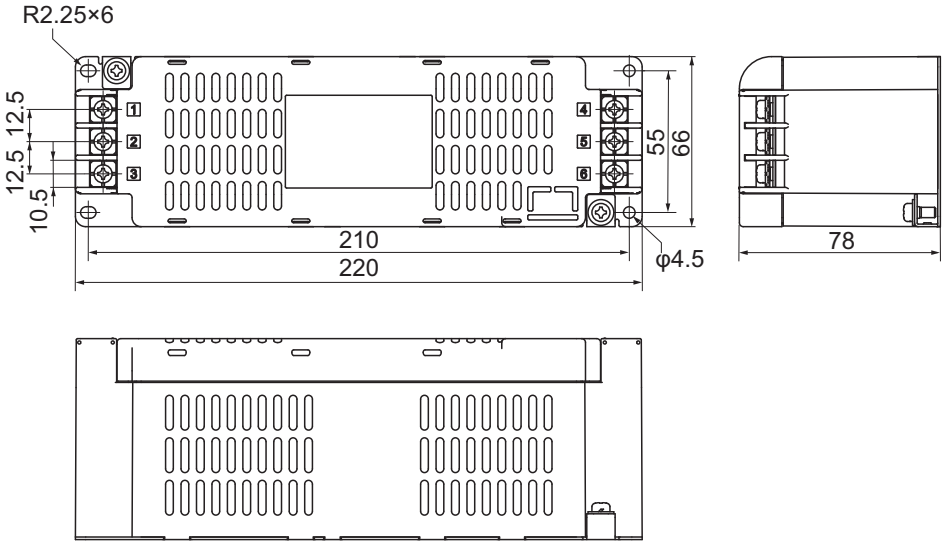

FSB-30-254-HU

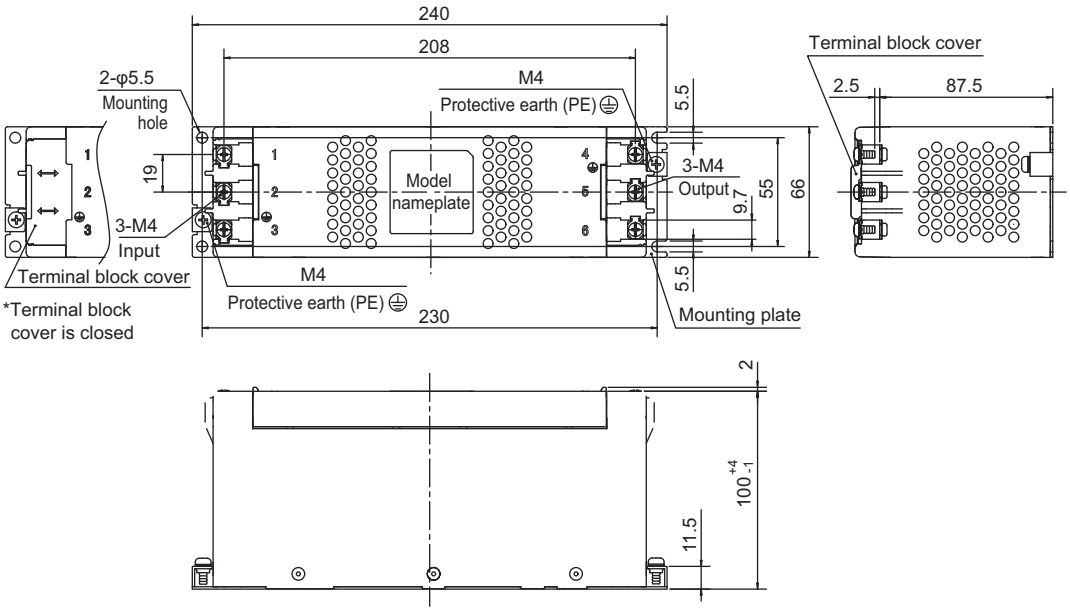
240
208
2-φ5.5
Mounting hole
M4
Protective earth (PE)
5.5
Terminal block cover
2.5
87.5
19
Model nameplate
3-M4
Output
9.7
55
66
3-M4
Input
Terminal block cover
M4
Protective earth (PE)
230
5.5
Mounting plate
*Terminal block cover is closed
2
100 +4 -1
11.5

3

Specifications

This section provides the general specifications, characteristics, connector specifications, and I/O circuits of the Servo Drives as well as the general specifications, characteristics, encoder specifications of the Servomotors and other peripheral devices.

3-1 Servo Drive Specifications 3-3

3-1-1 General Specifications 3-3
3-1-2 Characteristics 3-4
3-1-3 EtherCAT Communications Specifications 3-8
3-1-4 Main Circuit and Motor Connections 3-9
3-1-5 Control I/O Connector (CN1) Specifications 3-14
3-1-6 Control Input Circuits 3-16
3-1-7 Control Input Details 3-17
3-1-8 Control Output Circuits 3-18
3-1-9 Control Output Details 3-19
3-1-10 Encoder Pulse Output Specifications 3-19
3-1-11 Safety Signal Connector (CN14) Specifications 3-20
3-1-12 Safe Brake Control Connector (CN15) Specifications 3-24
3-1-13 Brake Interlock Connector (CN12) Specifications 3-25
3-1-14 Encoder Connector (CN2) Specifications 3-26
3-1-15 EtherCAT Communications Connector (RJ45) Specifications 3-26
3-1-16 USB Connector (CN7) Specifications 3-27
3-1-17 Power ON Sequence 3-27
3-1-18 Overload Characteristics (Electronic Thermal Function) 3-28

3-2 Servomotor Specifications 3-31

3-2-1 General Specifications 3-31
3-2-2 Encoder Specifications 3-32
3-2-3 Characteristics 3-33

3-3 Decelerator Specifications 3-44

3-4 Cable and Connector Specifications 3-47

3-4-1 Integrated Cable Specifications 3-47
3-4-2 Combination of Integrated Cable and Extension Cable 3-67
3-4-3 Resistance to Bending of Integrated Cable 3-68
3-4-4 EtherCAT Communications Cable Specifications 3-69

3-5 Specifications of External Regeneration Resistors and External Regeneration Resistance Units 3-72
3-5-1 General Specifications 3-72
3-5-2 Characteristics 3-72
3-5-3 External Regeneration Resistance Unit Specifications 3-74
3-6 Reactor Specifications 3-75
3-6-1 General Specifications 3-75
3-6-2 Characteristics 3-75
3-6-3 Terminal Block Specifications 3-76
3-7 Noise Filter Specifications 3-77
3-7-1 General Specifications 3-77
3-7-2 Characteristics 3-79
3-7-3 Terminal Block Specifications 3-80

3-1 Servo Drive Specifications

Select a Servo Drive that matches the Servomotor to be used. Refer to *2-3-3 Servo Drive and Servomotor Combination Tables* on page 2-12.

3-1-1 General Specifications

The specifications of the Servo Drives are shown below.

Item			Specifications
Operating ambient temperature and humidity			0 to 55°C, 90% max. (with no condensation)
Storage ambient temperature and humidity			-20 to 65°C, 90% max. (with no condensation)
Operating and storage atmosphere			No corrosive gases
Operating altitude			1,000 m max.
Vibration resistance			10 to 60 Hz and at an acceleration of 5.88 m/s^2 or less (Not to be run continuously at the resonance frequency)
Insulation resistance			Between power supply terminals/power terminals and PE terminals: 0.5 MΩ min. (at 500 VDC)
Dielectric strength			Between power supply terminals/power terminals and PE terminals: 1,500 VAC for 1 min (at 50/60 Hz)
Protective structure			IP20 (Built into IP54 panel)
International standard	EU Directives	EMC Directive	EN 61800-3 second environment, C3 category (EN 61000-6-7; Functional Safety)
		Low Voltage Directive	EN61800-5-1
		Machinery Directive	EN ISO 13849-1, EN 61508, EN 62061, EN 61800-5-2 (SIL3)
	UL standards		UL 61800-5-1
	CSA standards		CSA C22.2 No. 274
	Korean Radio Regulations (KC)		Compliant
	Australian EMC Labeling Requirements (RCM)		Compliant
	EAC requirements		Compliant
	SEMI standards		Can conform to the standard for momentary power interruptions (for no-load operation).
	Ship standards (NK/LR)		Not compliant

Note The above items reflect individual evaluation testing. The results may differ under compound conditions.

The detail of Machinery Directive is as follows:
The STO function via safety input signals: EN ISO 13849-1 (Cat.3 PLe), EN 61508, EN 62061, EN 61800-5-2 (SIL3)
The safety function via EtherCAT communications: EN ISO 13849-1 (STO/SS1/SBC: Cat.3 PLe, SS2/SLS/SDI/SOS/SLP: Cat.3 PLe), EN61508, EN62061, EN61800-5-2

Precautions for Correct Use

Disconnect all connections to the Servo Drive before attempting a megger test (insulation resistance measurement) on a Servo Drive. Not doing so may result in the Servo Drive failure.

Do not perform a dielectric strength test on the Servo Drive. Internal elements may be damaged.

3-1-2 Characteristics

The characteristics of the Servo Drives are shown below.

200-VAC Input Models

Servo Drive model (R88D-)			1SAN02H-ECT	1SAN04H-ECT	1SAN08H-ECT
Item			200 W	400 W	750 W
Input	Main circuit	Power supply voltage	Single-phase and 3-phase 200 to 240 VAC (170 to 252 V)*1		
		Frequency	50/60 Hz (47.5 to 63 Hz)*1		
	Control circuit	Power supply voltage	24 VDC (21.6 to 26.4 V)		
		Current consumption*2	700 mA		
	Rated current [A (rms)] (Main circuit power supply voltage: 240 VAC)	Single-phase	2.7	4.6	7.3
		3-phase	1.5	2.7	4.0
Output	Rated current [A (rms)]		1.5	2.5	4.6
	Maximum current [A (rms)]		5.6	9.1	16.9
Heating value [W]		Main circuit*3	17.0	25.0	42.0
		Control circuit	11.9	11.9	14.5
Applicable Servomotor rated output [W]			200	400	750
3,000-r/min Servomotor (R88M-)		Batteryless 20-bit ABS	1AM20030T	1AM40030T	1AM75030T
Hold time at momentary power interruption (Main circuit power supply voltage: 200 VAC)			10 ms (Load condition: rated output)*4		
SCCR [Arms]			5,000		
Weight [kg]			2.6	2.6	2.6

Servo Drive model (R88D-)			1SAN10H-ECT	1SAN15H-ECT	1SAN20H-ECT	1SAN30H-ECT
Item			1 kW	1.5 kW	2 kW	3 kW
Input	Main circuit	Power supply voltage	3-phase 200 to 240 VAC (170 to 252 V)*1	Single-phase and 3-phase 200 to 240 VAC (170 to 252 V)*1	3-phase 200 to 240 VAC (170 to 252 V)*1	
		Frequency	50/60 Hz (47.5 to 63 Hz)*1			
	Control circuit	Power supply voltage	24 VDC (21.6 to 26.4 V)			
		Current consumption*2	700 mA	1,000 mA		
	Rated current [A (rms)] (Main circuit power supply voltage: 240 VAC)	Single-phase	---	15.7	---	---
		3-phase	5.8	9.0	13.0	15.9
Output	Rated current [A (rms)]		7.7	9.7	16.2	22.3
	Maximum current [A (rms)]		16.9	28.4	41.0	54.7
Heating value [W]		Main circuit*3	49.0	88.0	140.0	150.0
		Control circuit	14.5	22.4	22.4	22.4
Applicable Servomotor rated output [W]			1,000	1,500	2,000	3,000
3,000-r/min Servomotor (R88M-)		Batteryless 20-bit ABS	1AL1K030T	1AL1K530T	1AL2K030T	1AL2K630T
1,500-r/min Servomotor (R88M-)		Batteryless 20-bit ABS	---	1AM1K515T	---	1AM2K715T
Hold time at momentary power interruption (Main circuit power supply voltage: 200 VAC)			10 ms (Load condition: rated output)*4			
SCCR [Arms]			5,000			
Weight [kg]			2.6	4.2	4.2	4.2

*1. The values outside parentheses indicate the rated value, and the values inside parentheses indicate the range of acceptable variation.

*2. Select a DC power supply in consideration of the current values that are specified in the current consumption.

The rated current value that is printed on the product nameplate is a condition to apply the 1S-series product for the UL/Low Voltage Directive.

Therefore, you do not need to consider it when you select a DC power supply for each model.

*3. This is the maximum heating value in applicable Servomotors.
Refer to *Relationship between Servo Drive, Servomotors and the Main Circuit Heating Value* on page 3-7 for the heating value of each applicable Servomotor.

*4. It is a hold time at momentary power interruption. Use a DC power supply to fulfill the following conditions so that the power supply of the control circuit is held during momentary power interruption.

Reinforced insulation or double insulation, and the output hold time of 10 ms or more

400-VAC Input Models

Use a neutral grounded 400 VAC 3-phase power supply for the 400 VAC input models.

Servo Drive model (R88D-)			1SAN10F-ECT	1SAN15F-ECT	1SAN20F-ECT	1SAN30F-ECT
Item			1 kW	1.5 kW	2 kW	3 kW
Input	Main circuit	Power supply voltage	3-phase 380 to 480 VAC (323 to 504 V)*1			
		Frequency	50/60 Hz (47.5 to 63 Hz)*1			
	Control circuit	Power supply voltage	24 VDC (21.6 to 26.4 V)			
		Current consumption*2	1,000 mA			
	Rated current [A (rms)] (Main circuit power supply voltage: 480 VAC)	3-phase	3.1	4.3	6.5	8.4
Output		Rated current [A (rms)]	4.1	4.7	7.8	11.3
		Maximum current [A (rms)]	9.6	14.1	19.8	28.3
Heating value [W]		Main circuit*3	56.0	81.0	120.0	150.0
		Control circuit	22.4	22.4	22.4	22.4
Applicable Servomotor rated output [W]			1,000	1,500	2,000	3,000
3,000-r/min Servomotor (R88M-)		Batteryless 20-bit ABS	1AL75030C 1AL1K030C	1AL1K530C	1AL2K030C	1AL3K030C
1,500-r/min Servomotor (R88M-)		Batteryless 20-bit ABS	---	1AM1K515C	---	1AM3K015C
Hold time at momentary power interruption (Main circuit power supply voltage: 400 VAC)			10 ms (Load condition: rated output)*4			
SCCR [Arms]			5,000			
Weight [kg]			4.2	4.2	4.2	4.2

*1. The values outside parentheses indicate the rated value, and the values inside parentheses indicate the range of acceptable variation.

*2. Select a DC power supply in consideration of the current values that are specified in the current consumption.

The rated current value that is printed on the product nameplate is a condition to apply the 1S-series Servo Drive Advance Type for the UL/Low Voltage Directive.

Therefore, you do not need to consider it when you select a DC power supply for each model.

*3. This is the maximum heating value in applicable Servomotors.
Refer to *Relationship between Servo Drive, Servomotors and the Main Circuit Heating Value* on page 3-7 for the heating value of each applicable Servomotor.

*4. It is a hold time at momentary power interruption. Use a DC power supply to fulfill the following conditions so that the power supply of the control circuit is held during momentary power interruption.

Reinforced insulation or double insulation, and the output hold time of 10 ms or more

Relationship between Servo Drive, Servomotors and the Main Circuit Heating Value

The combination of Servo Drive and Servomotors that changes the main circuit heating value is shown below.

Servo Drive model	Servomotor model	Main circuit heating value [W]
R88D-1SAN15H-ECT	R88M-1AL1K530T-□	88
	R88M-1AM1K515T-□	69
R88D-1SAN30H-ECT	R88M-1AL2K630T-□	150
	R88M-1AM2K715T-□	150
R88D-1SAN10F-ECT	R88M-1AL75030C-□	55
	R88M-1AL1K030C-□	56
R88D-1SAN15F-ECT	R88M-1AL1K530C-□	81
	R88M-1AM1K515C-□	52
R88D-1SAN30F-ECT	R88M-1AL3K030C-□	150
	R88M-1AM3K015C-□	140

3-1-3 EtherCAT Communications Specifications

The specifications of EtherCAT communications are shown below.

Item	Specifications
Communications standard	IEC 61158 Type 12, IEC 61800-7 CiA 402 Drive Profile
Physical layer	100BASE-TX (IEEE802.3)
Connectors	RJ45 × 2 (shielded) ECAT IN: EtherCAT input ECAT OUT: EtherCAT output
Communications media	Recommended media: Twisted-pair cable, which is doubly shielded by the aluminum tape and braid, with Ethernet Category 5 (100BASE-TX) or higher
Communications distance	Distance between nodes: 100 m max.
Process data	Fixed PDO mapping Variable PDO mapping
Mailbox (CoE)	Emergency messages, SDO requests, SDO responses, and SDO information
Synchronization mode and communications cycle	DC Mode (Synchronous with Sync0 Event) Communications cycle: 125 μs, 250 μs, 500 μs, 750 μs, 1 to 10 ms (in 0.25 ms increments) Free Run Mode
Indicators	ECAT-L/A IN (Link/Activity IN) × 1 ECAT-L/A OUT (Link/Activity OUT) × 1 ECAT-RUN × 1 ECAT-ERR × 1
CiA 402 Drive Profile	• Cyclic synchronous position mode • Cyclic synchronous velocity mode • Cyclic synchronous torque mode • Profile position mode • Profile velocity mode • Homing mode • Touch probe function • Torque limit function

3-1-4 Main Circuit and Motor Connections

When you wire the main circuit, use proper wire sizes, grounding systems, and noise resistance.

R88D-1SAN02H-ECT/-1SAN04H-ECT/-1SAN08H-ECT/-1SAN10H-ECT

● Main Circuit Connector (CNA) Specifications

Pin No.	Symbol	Name	Specifications
1	L1	Main circuit power supply input	R88D-1SAN□H-ECT Single-phase*1 200 to 240 VAC (170 to 252 V) 50/60 Hz (47.5 to 63 Hz) R88D-1SAN□H-ECT 3-phase 200 to 240 VAC (170 to 252 V) 50/60 Hz (47.5 to 63 Hz)
2	L2		
3	L3		
4	B3	External Regeneration Resistor connection terminals	When the Internal Regeneration Resistor is used: • Open between B1 and B2. • Short-circuit B2 and B3. When the External Regeneration Resistor is used: • Connect the External Regeneration Resistor between B1 and B2. • Open between B2 and B3.
5	B2		
6	P/B1		
7	N1	DC reactor connection terminals	When the DC reactor is not used: • Short-circuit N1 and N2. When the DC reactor is used: • Connect the DC reactor between N1 and N2.
8	N2		
9	N3		
10	24V	Control circuit power supply input	24 VDC (21.6 to 26.4 V) Measured current value: 700 mA
11	Ø		

*1. For single-phase, connect between any two phases out of the following: L1, L2, and L3.

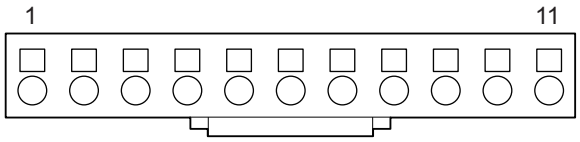

● Motor Connector (CNC) Specifications

Pin No.	Symbol	Name	Specifications	
1	U	Motor connection terminals	Phase U	These are output terminals to the Servomotor.
2	V		Phase V	
3	W		Phase W	

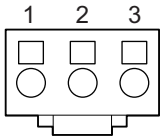

R88D-1SAN15H-ECT/-1SAN20H-ECT/-1SAN30H-ECT/-1SAN10F-ECT/-1SAN15F-ECT/-1SAN20F-ECT/-1SAN30F-ECT

● Main Circuit Connector A (CNA) Specifications

Symbol	Name	Specifications
B1 B2 B3	External Regeneration Resistor connection terminals	When the Internal Regeneration Resistor is used: • Open between B1 and B2. • Short-circuit B2 and B3. When the External Regeneration Resistor is used: • Connect the External Regeneration Resistor between B1 and B2. • Open between B2 and B3.
L3 L2 L1	Main circuit power supply input	R88D-1SAN15H-ECT Single-phase *1 200 to 240 VAC (170 to 252 V) 50/60 Hz (47.5 to 63 Hz) R88D-1SAN15H-ECT/-1SAN20H-ECT/-1SAN30H-ECT 3-phase 200 to 240 VAC (170 to 252 V) 50/60 Hz (47.5 to 63 Hz) R88D-1SAN□F-ECT 3-phase 380 to 480 VAC (323 to 504 V) 50/60 Hz (47.5 to 63 Hz)

*1. For single-phase, connect between any two phases out of the following: L1, L2, and L3.

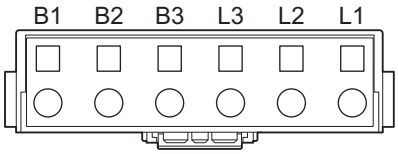

● Main Circuit Connector B (CNB) Specifications

Symbol	Name	Specifications
N3 N2 N1 P	DC reactor connection terminals	When the DC reactor is not used: • Short-circuit N1 and N2. When the DC reactor is used: • Connect the DC reactor between N1 and N2.

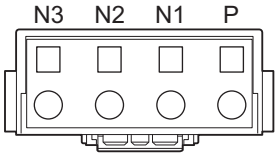

● Control Circuit Connector (CND) Specifications

Pin No.	Symbol	Name	Specifications
1	+24V	Control circuit power supply input	24 VDC (21.6 to 26.4 V)
2	0 V		Measured current value: 1000 mA
3	---	---	Do not connect.

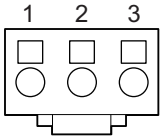

● Motor Connector (CNC) Specifications

Symbol	Name	Specifications	
W	Motor connection terminals	Phase W	These are output terminals to the Servomotor. Be sure to wire them correctly.
V		Phase V	
U		Phase U	
FG		FG	

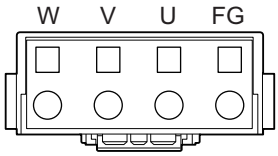

Terminal Block Wire Sizes

The following tables show the rated current that flows to the terminal block on the Servo Drive and the applicable wire sizes. Use the wire with the rated voltage of 600 V or higher for the main circuit.

The wire size is determined for when the heat-resistant polyvinyl chloride insulated wire (HIV) is used at the ambient temperature of 50°C.

● Wire Sizes for 200-VAC Input Model: R88D-1SAN□H-ECT

Item		Unit	Model (R88D-1SAN)			
			02H-ECT	04H-ECT	08H-ECT	10H-ECT
Power supply capacity		kVA	0.6	1.0	1.4	2.0
Main circuit power supply input (L1, L2, and L3) *1	Rated current	A(rms)	2.7/1.5*2	4.6/2.7*2	7.3/4.0*2	5.8
	Wire size	---	AWG 20 to 14, 0.5 to 2.0 mm^2	AWG 18 to 14, 0.75 to 2.0 mm^2	AWG16 to 14, 1.3 to 2.0 mm^2	
Control circuit power supply input (24 V, Ø)	Wire size	---	AWG 20 to 16, 0.5 to 1.5 mm^2			
Motor connection terminals (U, V, and W)*3*4	Rated current	A(rms)	1.5	2.5	4.6	7.7
	Wire size	---	AWG 21 to 14, 0.5 to 2.0 mm^2			AWG18 to 14, 1.0 to 2.0 mm^2
Protective earth ⏚	Wire size	---	AWG 12, 2.5 mm^2			
	Screw size	---	M4			
	Tightening torque	N·m	1.2			

Item		Unit	Model (R88D-1SAN)		
			15H-ECT	20H-ECT	30H-ECT
Power supply capacity		kVA	2.5	3.6	4.7
Main circuit power supply input (L1, L2, and L3) *1	Rated current	A	15.7/9.0*2	13.0	15.9
	Wire size	---	AWG 12 to 8, 3.3 to 8.4 mm^2		
Control circuit power supply input (+24 V and 0 V)	Wire size	---	AWG 20 to 16, 0.5 to 1.5 mm^2		
Motor connection terminals (U, V, and W) *3*4	Rated current	A	9.7	16.2	22.3
	Wire size	---	AWG 18 to 8, 1.0 to 8.4 mm^2	AWG 16 to 8, 1.5 to 8.4 mm^2	
Protective earth ⏚	Wire size	---	AWG 12, 2.5 mm^2		
	Screw size	---	M4		
	Tightening torque	N·m	1.2		

*1. For single-phase, connect between any two phases out of the following: L1, L2, and L3.

*2. The first value is for single-phase input power and the second value is for 3-phase input power.

*3. Connect OMRON Integrated Cable to the motor connection terminals.

*4. Use the wire with the same current capacity for the wiring of the motor connection terminals and for that of B1 and B2.

● Wire Sizes for 400-VAC Input Model: R88D-1SAN□□F-ECT

Item		Unit	Model (R88D-1SAN)			
			10F-ECT	15F-ECT	20F-ECT	30F-ECT
Power supply capacity		kVA	2.0	2.1	4.2	5.0
Main circuit power supply input (L1, L2, and L3) *1	Rated current	A(rms)	3.1	4.3	6.5	8.4
	Wire size	---	AWG 16 to 8, 1.3 to 8.4 mm^2			AWG 14 to 8, 2.0 to 8.4 mm^2
Control circuit power supply input (+24V and 0 V)	Wire size	---	AWG 20 to 16, 0.5 to 1.5 mm^2			
Motor connection terminals (U, V, and W)*1*2	Rated current	A(rms)	4.1	4.7	7.8	11.3
	Wire size	---	AWG 18 to 8, 1.0 to 8.4 mm^2			
Protective earth ⏚	Wire size	---	AWG 12, 2.5 mm^2			
	Screw size	---	M4			
	Tightening torque	N·m	1.2			

*1. Connect OMRON Integrated Cable to the motor connection terminals.

*2. Use the wire with the same current capacity for the wiring of the motor connection terminals and for that of B1 and B2.

Wire Sizes and Allowable Current (Reference)

The following table shows the allowable currents for each wire size.

Select wires carefully so that the specified allowable currents are not exceeded.

● 600-V Heat-resistant Vinyl Wire (HIV)

AWG size	Nominal cross-sectional area [mm^2]	Configuration [wires/mm^2]	Conductive resistance [Ω/km]	Allowable current [A] for ambient temperature		
				30°C	40°C	50°C
20	0.5	19/0.18	39.5	6.6	5.6	4.5
---	0.75	30/0.18	26.0	8.8	7.0	5.5
18	0.9	37/0.18	24.4	9.0	7.7	6.0
16	1.25	50/0.18	15.6	12.0	11.0	8.5
14	2.0	7/0.6	9.53	23	20	16
12	3.5	7/0.8	5.41	33	29	24
10	5.5	7/1.0	3.47	43	38	31
8	8.0	7/1.2	2.41	55	49	40
6	14.0	7/1.6	1.35	79	70	57
4	22.0	7/2.0	0.85	99	88	70

3-1-5 Control I/O Connector (CN1) Specifications

The following shows the specifications of the control I/O connector.

Control I/O Signal Connections and External Signal Processing

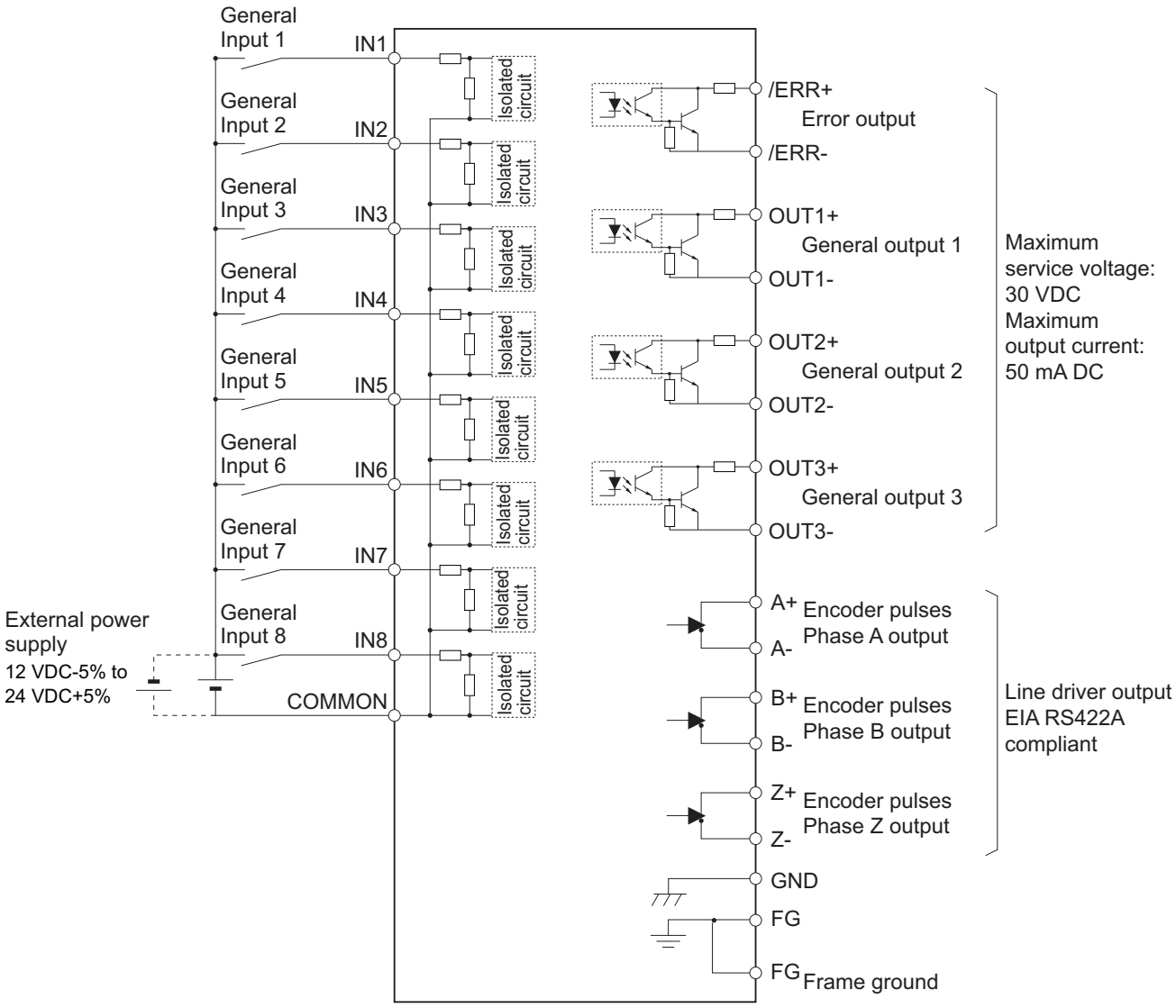

Control I/O Signal Table

Pin No.	Symbol	Signal name	Pin No.	Symbol	Signal name
1	/ERR+	Error output	15	/ERR-	Error Output
2	OUT1+	General Output 1	16	OUT1-	General Output 1
3	OUT2+	General Output 2	17	OUT2-	General Output 2
4	OUT3+	General Output 3	18	OUT3-	General Output 3
5	IN1	General Input 1	19	IN2	General Input 2
6	IN3	General Input 3	20	IN4	General Input 4
7	IN5	General Input 5	21	IN6	General Input 6
8	IN7	General Input 7 (high-speed)	22	IN8	General Input 8 (high-speed)
9	GND	GND (for pulse output)	23	COMMON	12 to 24-VDC Power Supply Input
10	A+	Encoder Pulse Phase-A+ Output	24	A-	Encoder Pulse Phase-A- Output
11	B+	Encoder Pulse Phase-B+ Output	25	B-	Encoder Pulse Phase-B- Output
12	Z+	Encoder Pulse Phase-Z+ Output	26	Z-	Encoder Pulse Phase-Z- Output
13	NC	Reserved	27	NC	Reserved
14	FG	FG	28	FG	FG

Control I/O Connector (28 pins)

Model	Manufacturer	OMRON model
DFMC1,5/14-ST-3,5-LRBK	PHOENIX CONTACT	R88A-CN102C

Applicable wire: AWG 24 to 16 (0.2 to 1.5 mm^2) (Strip length of the wire insulating cover: 10 mm)

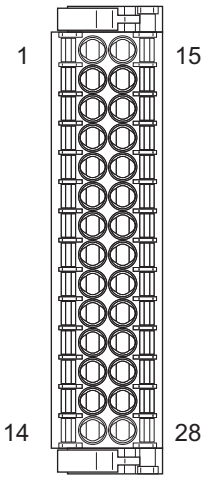

3-1-6 Control Input Circuits

The specifications of the control input circuits are shown below.

General Inputs (IN1 to IN6)

External power supply
12 VDC-5% to
24 VDC+5%
Input current
specification 10 mA
max.
(per point)

Signal level
ON level: 9 V or more
OFF level: 3 V or less

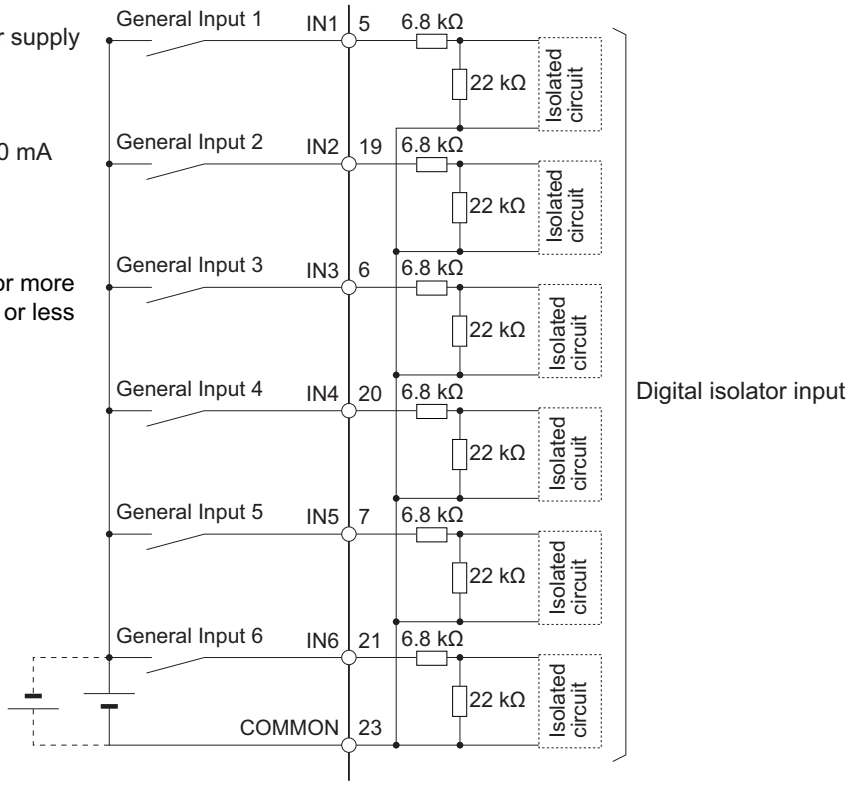

General Inputs (high-speed) (IN7 to IN8)

External power
supply
12 VDC-5% to
24 VDC+5%
Input current
specification
10 mA max.
(per point)

Signal level
ON level: 9 V or more
OFF level: 3 V or less

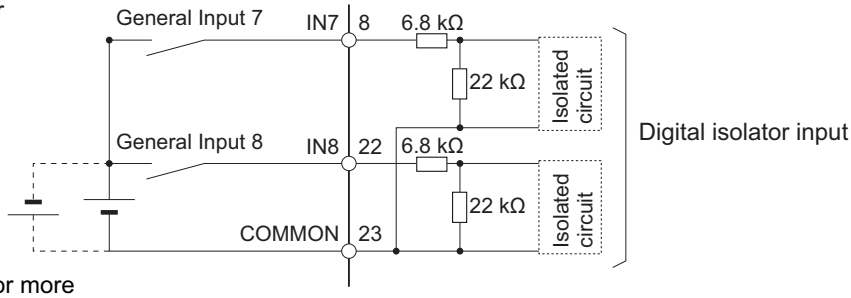

Response speed
4 μs or less (delay due to hardware)

3-1-7 Control Input Details

The detailed information about the control input pins is shown below.

General Inputs (IN1 to IN8)

Pin No.	General input	The functions that are allocated by default
5	General input 1 (IN1)	Error Stop Input (ESTP)
19	General input 2 (IN2)	Positive Drive Prohibition Input (POT)
6	General input 3 (IN3)	Negative Drive Prohibition Input (NOT)
20	General input 4 (IN4)	Home Proximity Input (DEC)
7	General input 5 (IN5)	Monitor input 1 (MON1)
21	General input 6 (IN6)	Monitor input 2 (MON2)
8	General input 7 (high-speed) (IN7)	External Latch Input 1 (EXT1)
22	General input 8 (high-speed) (IN8)	External Latch Input 2 (EXT2)

Note Refer to *7-1 General-purpose Input Signals* on page 7-3 for the allocation procedures for general input.

3-1-8 Control Output Circuits

The specifications of the control output circuits are shown below.

Error Output (/ERR), General Output (OUT1 to 3)

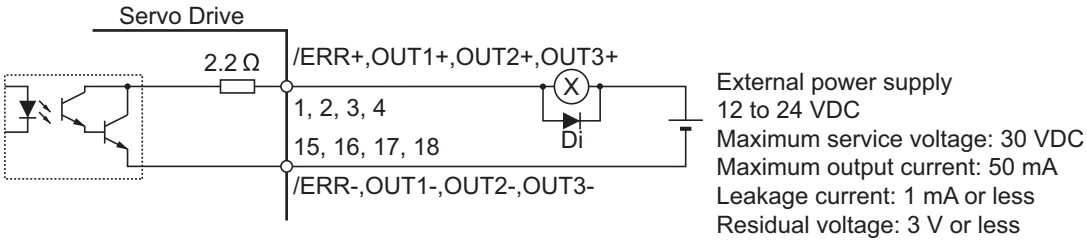

Di: Surge voltage prevention diode*1

*1. When you use an output signal to drive a relay directly, always insert a diode as shown in the above figure. Use a high-speed diode

External Brake Interlock Output (EXTBKIR)

When the brake control is performed with the external brake interlock output (EXTBKIR) allocated to the general output, the connection must be as shown below.

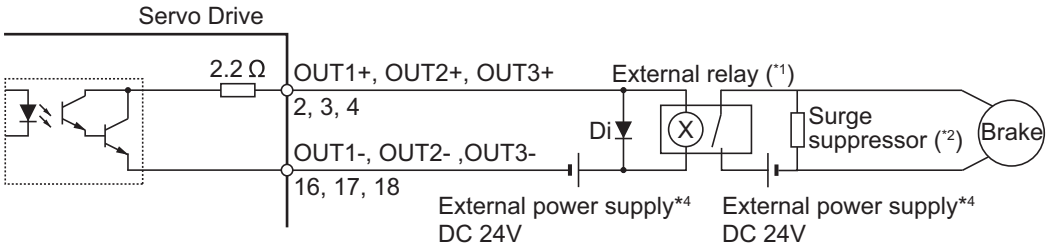

Di: Surge voltage prevention diode*3

*1. We reccomend you to use the OMRON MY Relay (24 V type) for the external relay.

*2. We reccomend you to use the Panasonic Corporation ERZ-V07D390 for the surge suppressor.

*3. Always insert a diode as shown in the above figure.
We reccomend you to use the Sanken Electric Co., LTD. RU2 for the diode.

*4. Do not share the external power supply.

3-1-9 Control Output Details

The detailed information about the control output pins is shown below.

Error Output (/ERR)

Pin No.	Error output	Function
1	/ERR+	This output is turned OFF when the Servo Drive detects an error.
15	/ERR-	

General Output (OUT1 to OUT3)

Pin No.	General-purpose output	The functions that are allocated by default
2	General Output 1 (OUT1+)	Servo Ready Output (READY)
16	General Output 1 (OUT1-)	
3	General Output 2 (OUT2+)	Remote Output 1 (R-OUT1)
17	General Output 2 (OUT2-)	
4	General Output 3 (OUT3+)	Remote Output 2 (R-OUT2)
18	General Output 3 (OUT3-)	

Note Refer to *7-2 General-purpose Output Signals* on page 7-8 for the allocation procedures.

3-1-10 Encoder Pulse Output Specifications

The specifications of encoder pulse output signals are shown below.

Pin No.	Symbol	Name	Function and interface
10	A+	Encoder phase-A output	Encoder signal output Line driver output EIARS422A compliant (load resistance: 120 Ω (Typ.)) Maximum output frequency: 4 Mpps (quadruple multiplier)
24	A-		
11	B+	Encoder Phase-B output	
25	B-		
12	Z+	Encoder Phase-Z output	
26	Z-		
9	GND	Encoder GND	GND for Encoder

Encoder Pulse Output Circuit

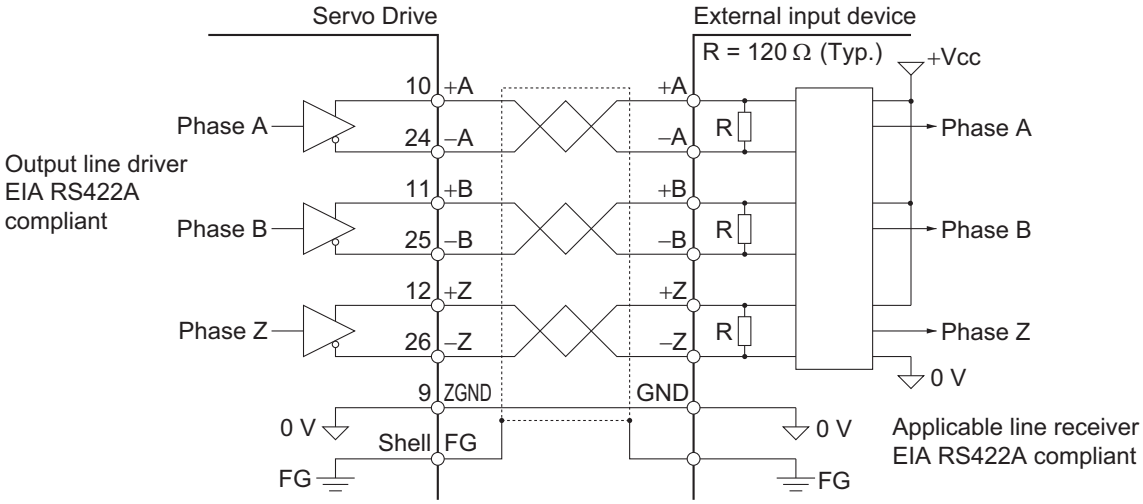

3-1-11 Safety Signal Connector (CN14) Specifications

The following shows the specifications of the connector used for functional safety signals (STO signals/SOPT inputs).

Connection of Safety I/O Signals and Processing of External Signals

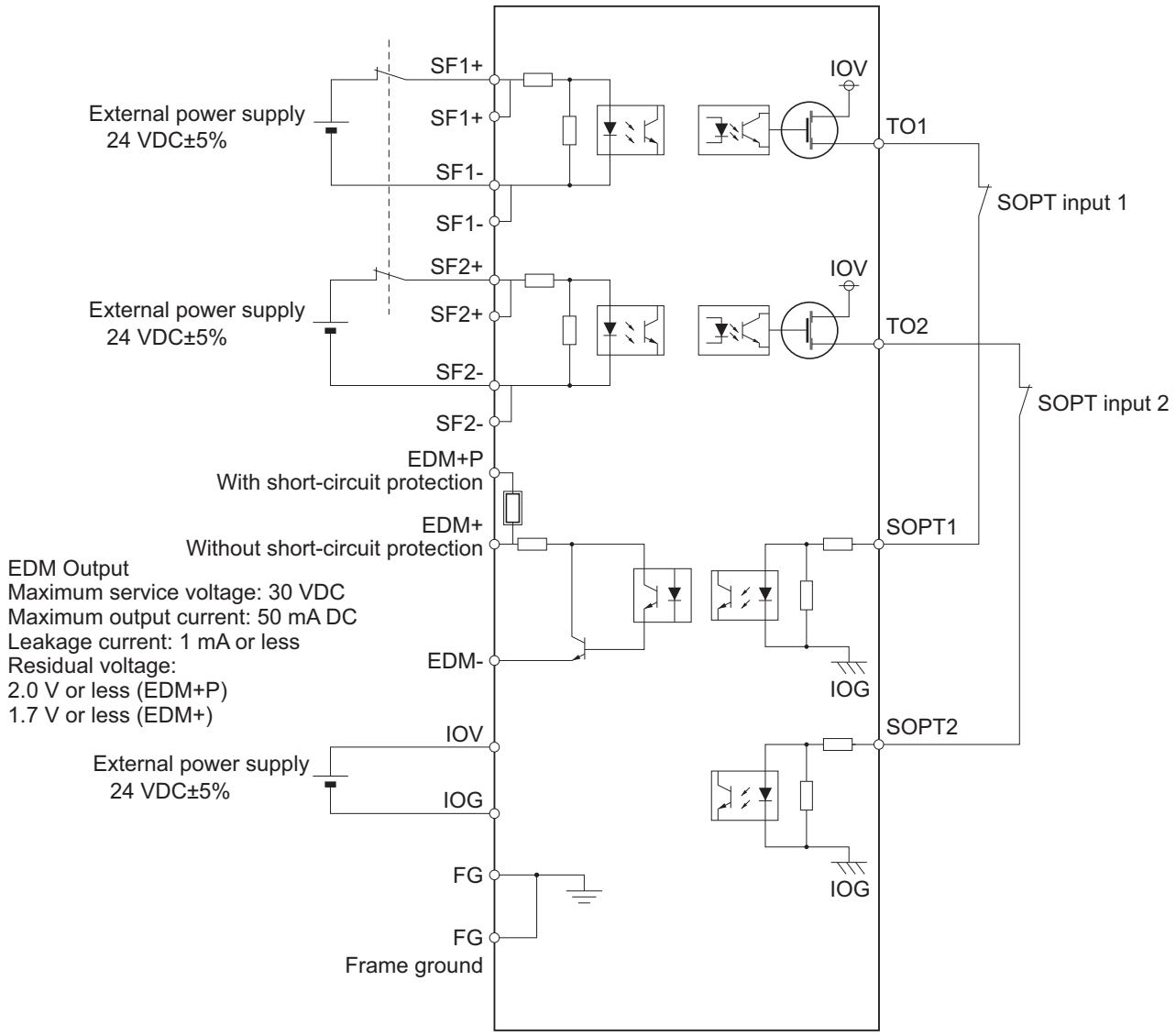

Safety I/O Signal Table

Pin No.	Symbol	Signal name	Pin No.	Symbol	Signal name
1	EDM+P	EDM+ Output with short-circuit protection	12	EDM-	EDM- Output
2	EDM+	EDM+ Output without short-circuit protection	13	SFA	Reserved
3	SF1+	SF1+ Input	14	SF1+	SF1+ Input
4	SF1-	SF1- Input	15	SF1-	SF1- Input
5	SF2+	SF2+ Input	16	SF2+	SF2+ Input
6	SF2-	SF2- Input	17	SF2-	SF2- Input
7	SFB	Reserved	18	NC	Reserved
8	TO1	Test Output 1	19	TO2	Test Output 2
9	SOPT1	SOPT1 Input	20	SOPT2	SOPT2 Input
10	IOV	Test output, 24-V power supply for SOPT input (+)	21	IOG	Test output, 24-V power supply for SOPT input (-)
11	FG	FG	22	FG	FG

● Connector for CN14 (22 Pins)

Model	Manufacturer	Omron model
DFMC1,5/11-ST-3,5-LRBK	PHOENIX CONTACT	R88A-CN101S*1

*1. Four short-circuit wires are connected to the connector.
Connection combinations:
3: SF1+ and 5: SF2+
6: SF2- and 7: SFB
13: SFA and 14: SF1+
15: SF1- and 17: SF2-

Applicable wire: AWG 24 to 16 (0.2 to 1.5 mm^2) (Strip length of the wire insulating cover: 10 mm)

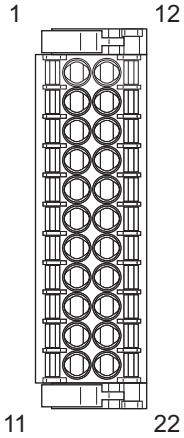

Note Connectors at Servo Drives side include a pin to prevent improper connection.

Safety Input Circuits

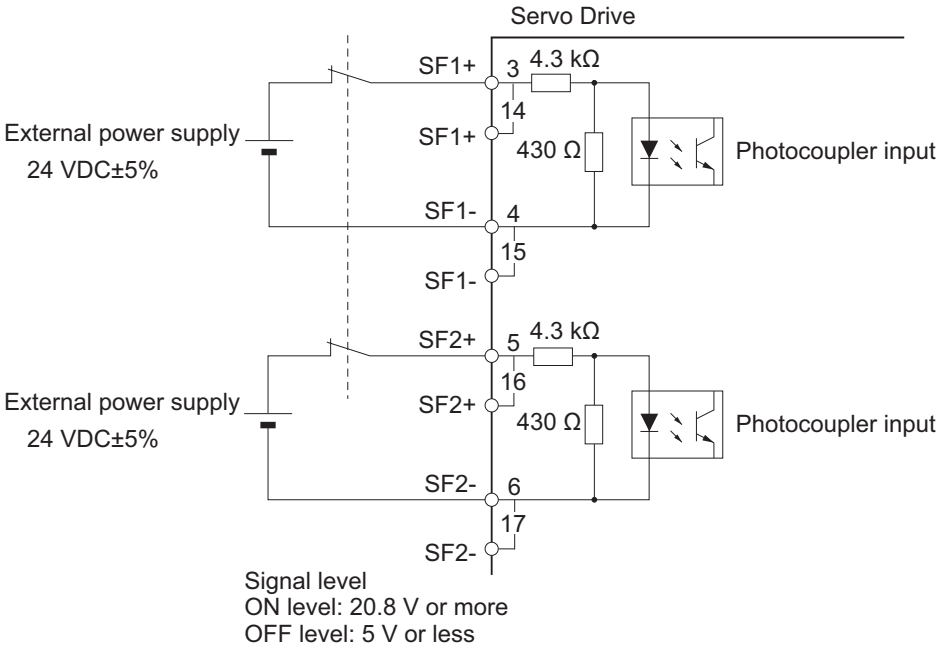

EDM Output Circuit

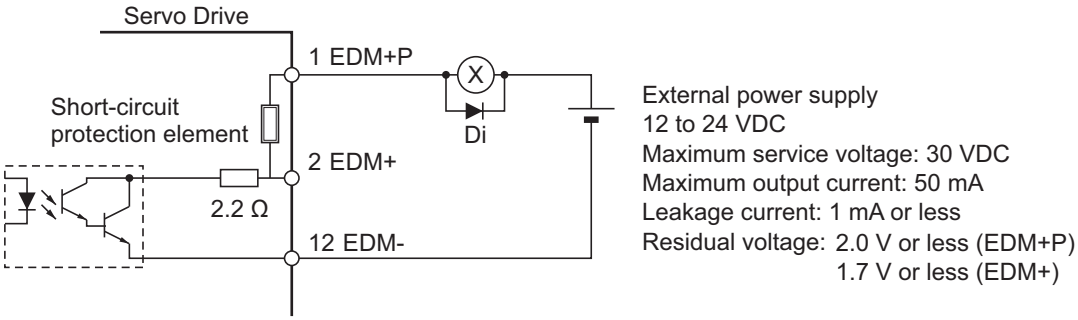

Di: Surge voltage prevention diode*1

*1. When you use an output signal to drive a relay directly, always insert a diode as shown in the above figure. Use a high-speed diode.

Test output/SOPT Input Circuits

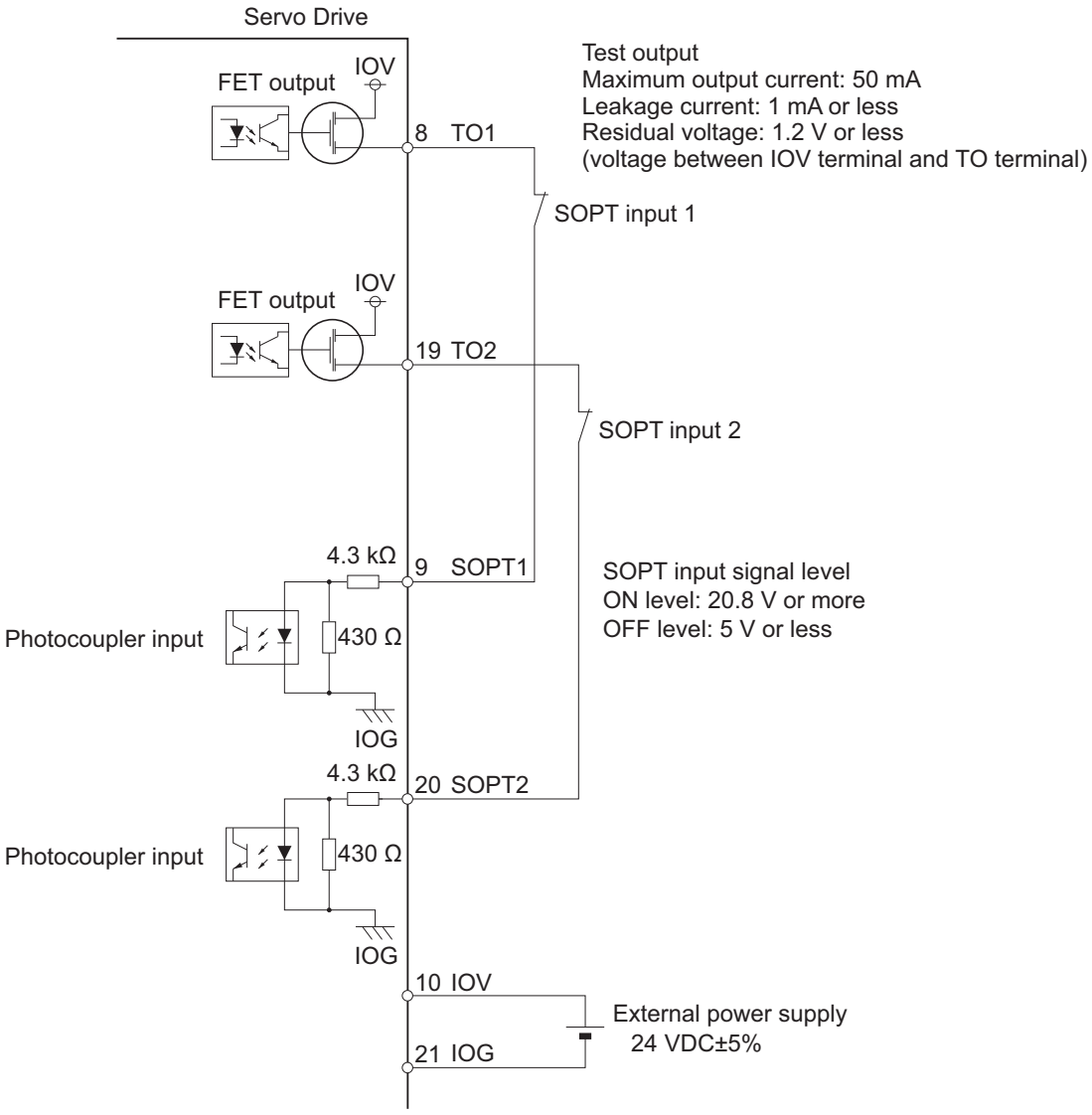

3-1-12 Safe Brake Control Connector (CN15) Specifications

The specifications of the safe brake control connector are shown below.

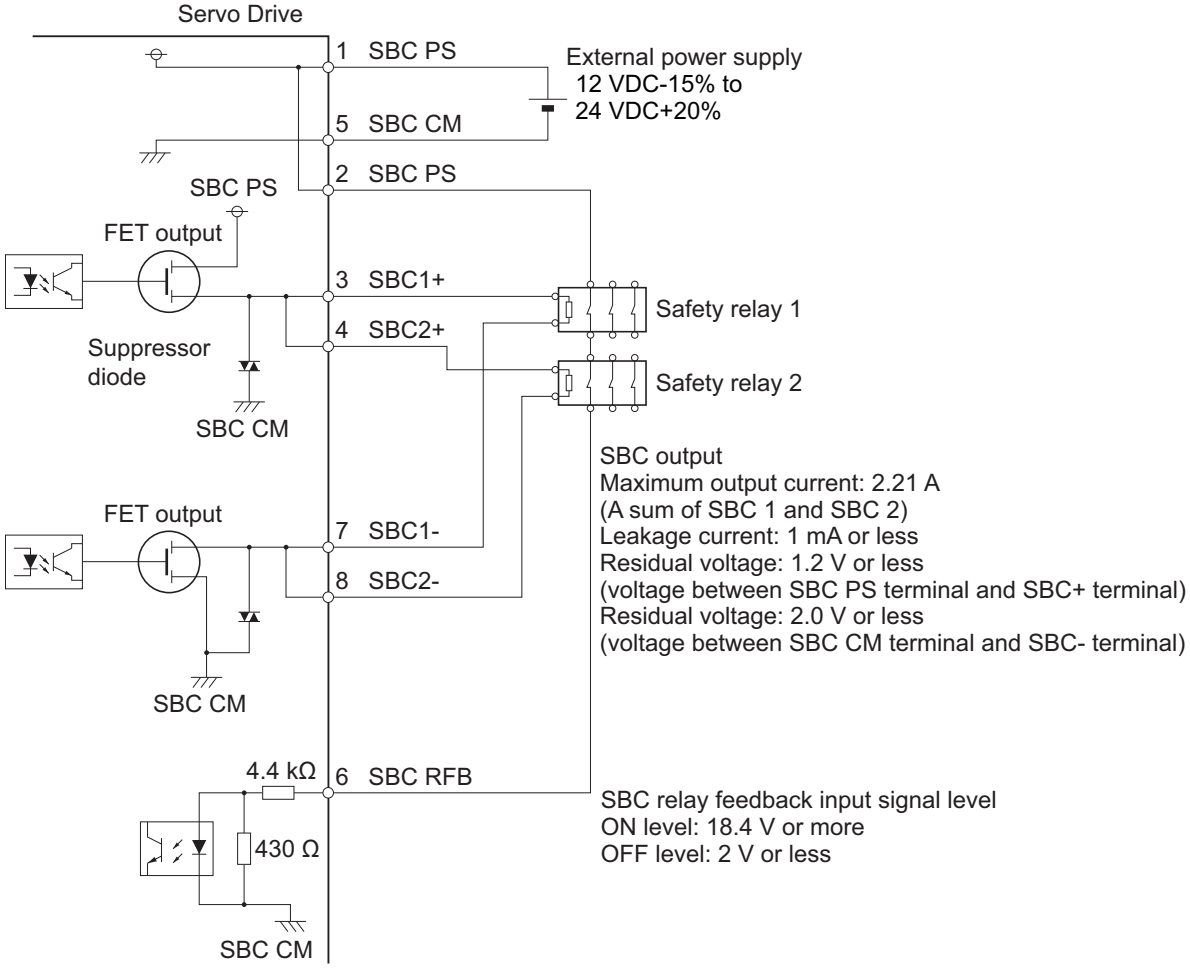

Pin No.	Symbol	Signal name	Pin No.	Symbol	Signal name
1	SBC PS	24-V power supply for SBC (+)	5	SBC CM	24-V power supply for SBC (-)
2	SBC PS	24-V power supply for SBC (+)	6	SBC RFB	SBC relay feedback input
3	S1+	SBC1+	7	S1-	SBC1-
4	S2+	SBC2+	8	S2-	SBC2-

● Connector for CN15 (8 Pins)

Model	Manufacturer	Omron model
DFMC1,5/4-ST-3,5-LRBK	PHOENIX CONTACT	R88A-CN102S

Applicable wire: AWG 24 to 16 (0.2 to 1.5 mm^2) (Strip length of the wire insulating cover: 10 mm)

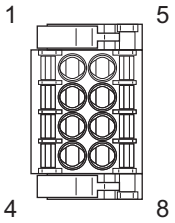

3-1-13 Brake Interlock Connector (CN12) Specifications

The specifications of the brake interlock connector are shown below.

Pin No.	Symbol	Name
1	0V_BKIR	24-V power supply for brake (-)
2	+24V_BKIR	24-V power supply for brake (+)
3	BKIR-	Brake output (-)
4	BKIR+	Brake output (+)

● Connectors (4 Pins)

Model	Manufacturer	Omron model
2091-1104/0002-1000	WAGO	R88A-CN101B

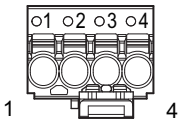

Applicable wire: AWG 24 to 16 (0.2 to 1.5 mm^2)
(Strip length of the wire insulating cover: 10 mm)

Brake Interlock Output Circuits

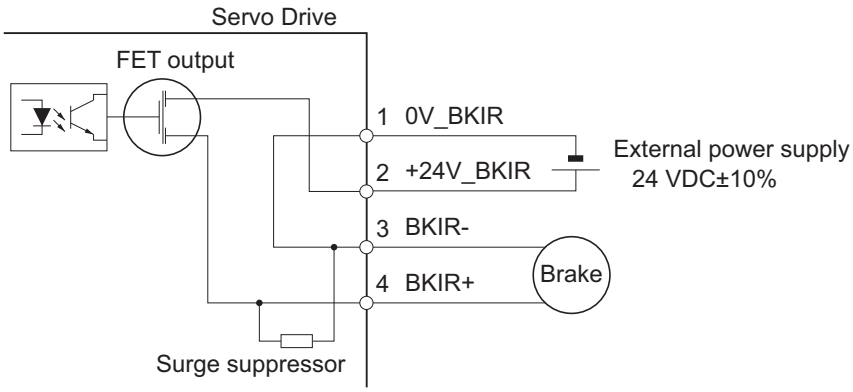

*1. A surge suppressor is built-in.

3-1-14 Encoder Connector (CN2) Specifications

The specifications of the encoder connectors are shown below.

Pin No.	Symbol	Name
1	---	Reserved
2	---	Reserved
3	DSL+	Encoder signal +
4	DSL-	Encoder signal -
5	---	Reserved
6	---	Reserved
Shell	FG	Frame ground

● Connectors for CN2 (6 Pins)

Name	Model	Manufacturer	OMRON model
Receptacle	3E206-0100KV	3M	R88A-CN101R
Shell kit	3E306-3200-008	3M	

3-1-15 EtherCAT Communications Connector (RJ45) Specifications

The EtherCAT twisted-pair cable is connected to a shielded connector.

- Electrical characteristics: Conform to IEEE 802.3.
- Connector structure: RJ45 8-pin modular connector (conforms to ISO 8877)

	Pin No.	Signal name	Signal	Direction
	1	Send data +	TD+	Output
	2	Send data -	TD-	Output
	3	Receive data +	RD+	Input
	4	Not used.	---	---
	5	Not used.	---	---
	6	Receive data -	RD-	Input
	7	Not used.	---	---
	8	Not used.	---	---
	Connector hood	Anti-noise ground	---	---

3-1-16 USB Connector (CN7) Specifications

Through the USB connection with computer, you can perform operations such as servo parameter setting and changing, monitoring of control status, and checking error status and error history.

Pin No.	Symbol	Name	Function and interface
1	VBUS	USB signal terminal	Used for communications with the computer.
2	D-		
3	D+		
4	---	Not used.	Do not connect.
5	GND	Signal ground	Signal ground

Precautions for Correct Use

- Use a commercially available USB cable that is double-shielded, gold-plated, and supports USB 2.0. The Micro B type USB cable can be used.
- When you connect PC to the USB connector of the Servo Drive, separate the USB cable from other cables such as the main circuit power supply cable.

3-1-17 Power ON Sequence

This section gives the time from when the control power supply for the Servo Drive is turned ON until the control I/O and EtherCAT communications are enabled.

Communications with the master is started after the EtherCAT communications are enabled. Perform Servo ON and send commands only after the EtherCAT communications are established.

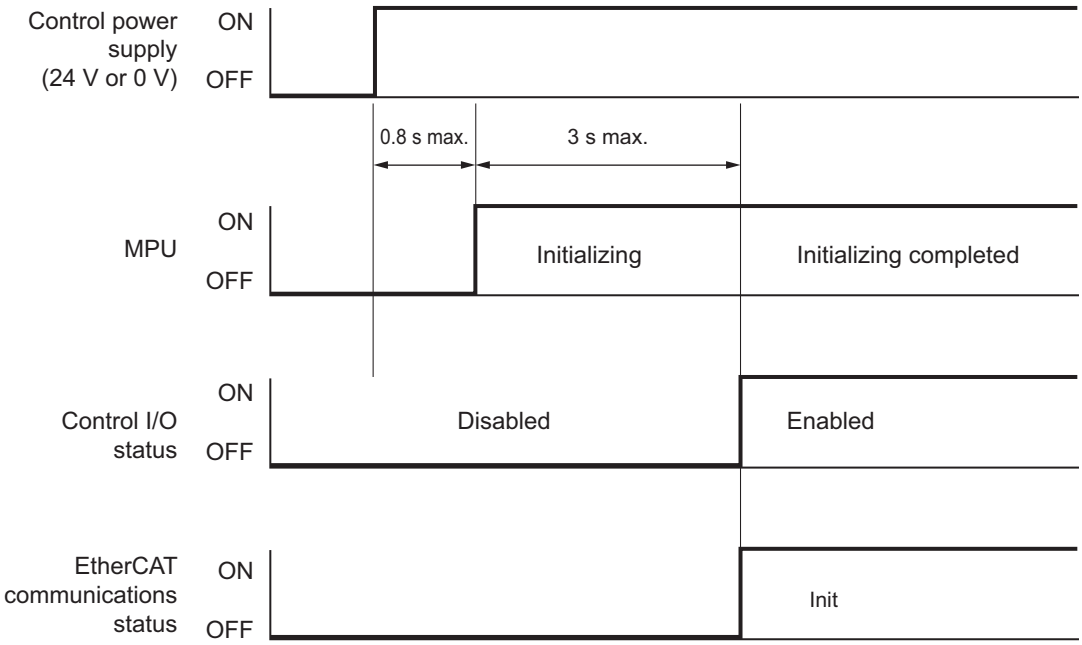

3-1-18 Overload Characteristics (Electronic Thermal Function)

The overload protection function (electronic thermal) is built into the Servo Drive to protect the Servo Drive and Servomotor from overloading.

If an overload occurs, first eliminate the cause of the overload and then wait for the Servomotor temperature to drop before you turn ON the power again.

If the error reset is repeated at short intervals, the Servomotor windings may burn out.

Overload Characteristics Graphs

The following graphs show the electronic thermal operation time after continuous operation with 100% load (hot start).

The electronic thermal operation time after a continuous 0% load state (cold start) is longer than that for a hot start.

In cases where models with an oil seal or with a brake have different characteristics, each of their characteristics is described.

The characteristics are the same as those of models with no option unless otherwise specified.

In the some models, the detection time of the overload protection function is shorter than existing models. If the overload warning or error occur, change the operation pattern by increasing the acceleration/deceleration time or the like.

● 200-VAC Servomotors

• 200 W

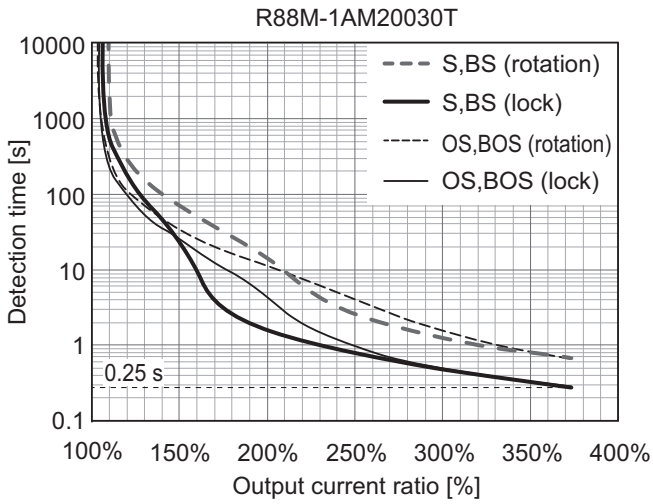

• 400 W

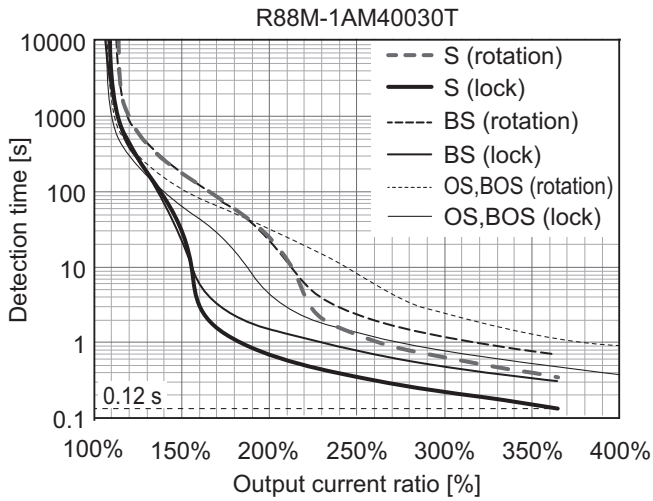

• 750 W

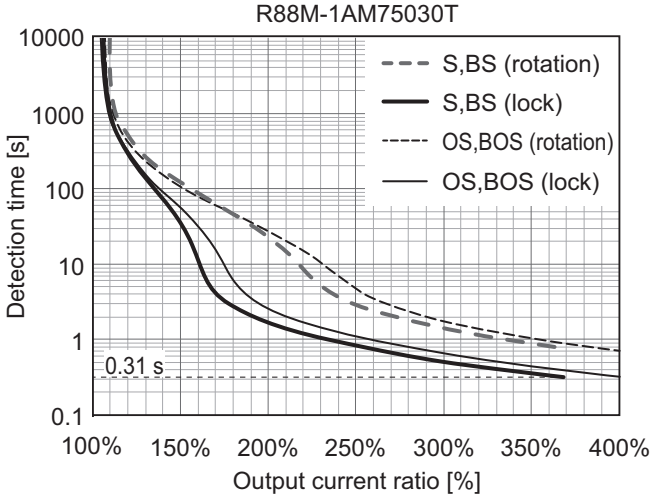

• 1 kW

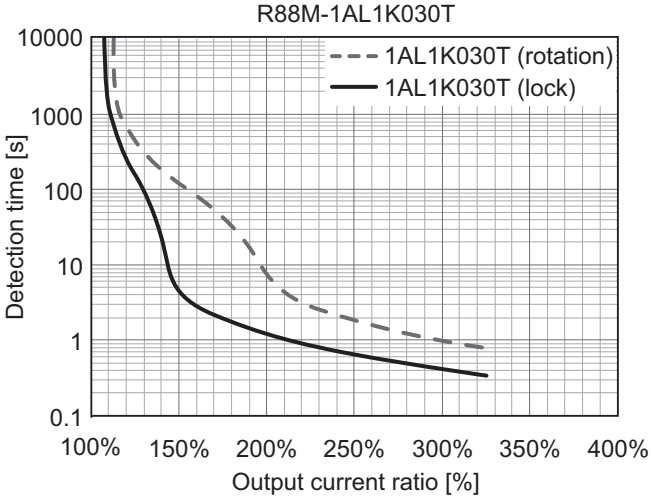

• 1.5 kW

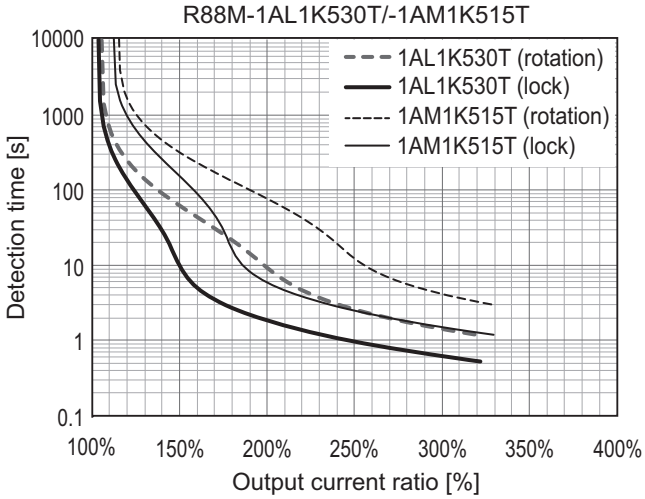

• 2 kW

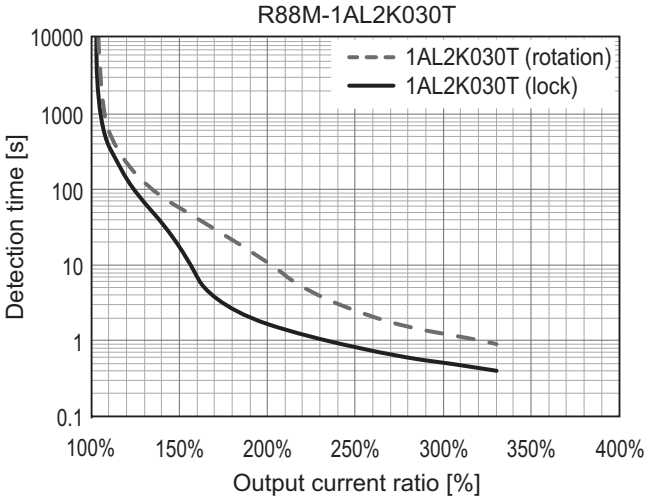

• 2.6kW, 2.7 kW

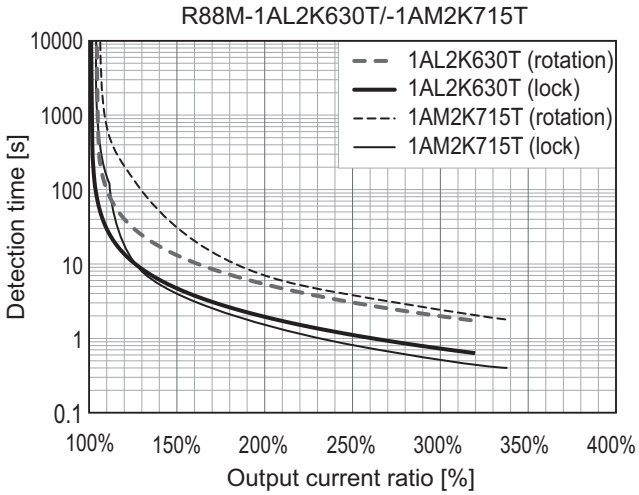

● 400-VAC Servomotors

• 750 W, 1 kW

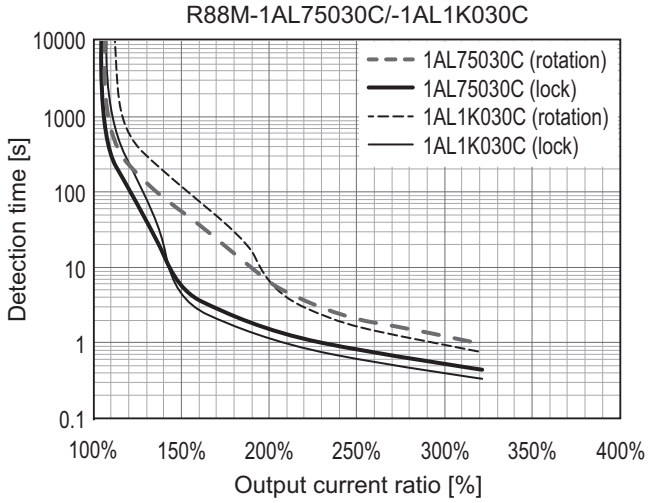

• 1.5 kW

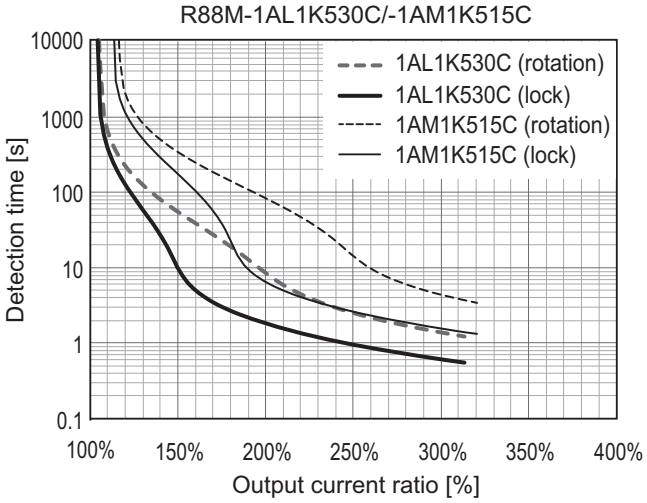

• 2 kW

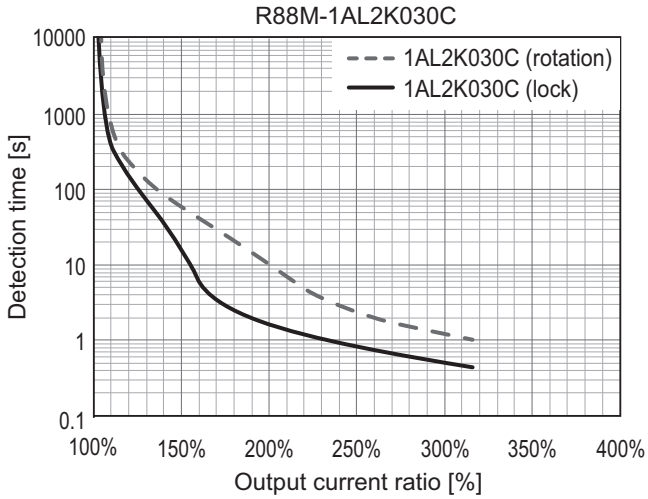

• 3 kW

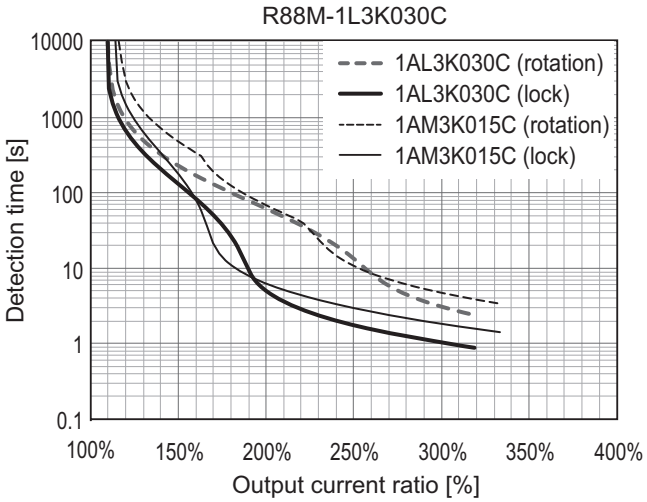

3-2 Servomotor Specifications

The following 1S-series Servomotors Advance Type R88M-1AL□/-1AM□ are available.

- 3,000-r/min Servomotors
- 1,500-r/min Servomotors

There are various options available, such as models with brakes, or different shaft types.

Select a Servomotor based on the mechanical system's load conditions and the installation environment.

3-2-1 General Specifications

Item			Specifications
Operating ambient temperature and humidity			0 to 40°C 20% to 90% (with no condensation)
Storage ambient temperature and humidity			-20 to 65°C 20 to 90% (with no condensation)
Operating and storage atmosphere			No corrosive gases
Vibration resistance*1			Acceleration of 49 m/s^2 24.5 m/s^2 max. in X, Y, and Z directions when the motor is stopped
Impact resistance			Acceleration of 98 m/s^2 max. 3 times each in X, Y, and Z directions
Insulation resistance			Between power terminals and FG terminals: 10 MΩ min. (at 500 VDC Megger)
Dielectric strength			Between power terminals and FG terminals: 1,500 VAC for 1 min (voltage 200 V) Between power terminals and FG terminals: 1,800 VAC for 1 min (voltage 400 V) Between brake terminal and FG terminals: 1,000 VAC for 1 min
Insulation class			Class F
Protective structure			IP67 (except for the through-shaft part and connector pins)
International standard	EU Directives	Low Voltage Directive	EN 60034-1/-5
	UL standards		UL 1004-1/-6
	CSA standards		CSA C22.2 No.100 (with cUR mark)

*1. The amplitude may be increased by machine resonance. As a guideline, 80% of the specified value must not be exceeded.

Note 1. Do not use the cable when it is laying in oil or water.
2. Do not expose the cable outlet or connections to stress due to bending or its own weight.

3-2-2 Encoder Specifications

The encoder specifications are shown below.

Item	Specifications
Encoder system	Optical batteryless absolute encoder
Resolution per rotation	20 bits
Multi-rotation data hold	12 bits
Output signal	Serial communications
Output interface	RS485 compliant

It is possible to use an absolute encoder as an incremental encoder.

Refer to *9-13 Encoder-related Objects* on page 9-104 for setting.

3-2-3 Characteristics

3,000-r/min Servomotors

Item		Model (R88M-) Unit	200 VAC 1AM20030T	1AM40030T	1AM75030T
Rated output*1*2		W	200	400	750
Rated torque*1*2		N·m	0.637	1.27	2.39
Rated rotation speed*1*2		r/min	3,000		
Maximum rotation speed		r/min	6,000		
Momentary maximum torque*1*3		N·m	2.2*4	4.5*4	8.4*4
Rated current*1*2		A (rms)	1.5	2.5	4.6
Momentary maximum current*1		A (rms)	5.6	9.1	16.9
Rotor inertia	Without brake	$\times 10^{-4}$ kg·m^2	0.224	0.446	1.825
	With brake	$\times 10^{-4}$ kg·m^2	0.284	0.506	2.075
Applicable load inertia		$\times 10^{-4}$ kg·m^2	4.80	8.40	19.4
Torque constant*1		N·m/A (rms)	0.48	0.56	0.59
Power rate*1*5		kW/s	18.1	36.2	31.3
Mechanical time constant*5		ms	0.79	0.58	0.66
Electrical time constant		ms	2.4	2.6	3.3
Allowable radial load*6		N	245	245	490
Allowable thrust load*6		N	88	88	196
Weight	Without brake	kg	1.3	1.8	3.2
	With brake	kg	1.7	2.2	4.1
Radiator plate dimensions (material)		mm	250 × 250 × t6 (aluminum)		
Brake specifications*7	Excitation voltage*8	V	24 DC ±10%		
	Current consumption (at 20°C)	A	0.32	0.32	0.37
	Static friction torque	N·m	1.37 min.	1.37 min.	2.55 min.
	Attraction time	ms	30 max.	30 max.	40 max.
	Release time*9	ms	20 max.	20 max.	35 max.
	Backlash	°	1.2 max.	1.2 max.	1.0 max.
	Allowable braking work	J	60	60	250
	Allowable total work	J	60,000	60,000	250,000
	Allowable angular acceleration	rad/s^2	10,000 max.		
	Brake lifetime (acceleration/deceleration)	---	10 million times min.		
	Brake lifetime (ON/OFF), B10d	---	1 million times min.		
	Insulation class	---	Class F		

For models with an oil seal the following derating is used due to increase in friction torque.

Item	Model (R88M-) / Unit	1AM20030T-O/ -OS2/-BO/-BOS2	1AM40030T-O/ -OS2/-BO/-BOS2	1AM75030T-O/ -OS2/-BO/-BOS2
Derating rate	%	95	80	90
Rated output	W	190	320	675
Rated current	A (rms)	1.5	2.1	4.2

Item		Model (R88M-) / Unit	200 VAC			
			1AL1K030T	1AL1K530T	1AL2K030T	1AL2K630T
Rated output*1*2		W	1,000	1,500	2,000	2,600
Rated torque*1*2		N·m	3.18	4.77	6.37	8.28
Rated rotation speed*1*2		r/min	3,000			
Maximum rotation speed		r/min	5,000			
Momentary maximum torque*1*3		N·m	9.55	14.3	19.1	24.8
Rated current*1*2		A (rms)	5.2	8.8	12.5	14.8
Momentary maximum current*1		A (rms)	16.9	28.4	41.0	47.3
Rotor inertia	Without brake	$\times 10^{-4}$ kg·m^2	2.105	2.105	2.405	6.813
	With brake	$\times 10^{-4}$ kg·m^2	2.555	2.555	2.855	7.313
Applicable load inertia		$\times 10^{-4}$ kg·m^2	35.3	47.6	60.2	118
Torque constant*1		N·m/ A (rms)	0.67	0.58	0.56	0.62
Power rate*1*5		kW/s	48	108	169	101
Mechanical time constant*5		ms	0.58	0.58	0.50	0.47
Electrical time constant		ms	5.9	6.1	6.4	11
Allowable radial load*6		N	490			
Allowable thrust load*6		N	196			
Weight	Without brake	kg	5.8	5.8	6.5	11.5
	With brake	kg	7.5	7.5	8.2	13.5
Radiator plate dimensions (material)		mm	400 × 400 × t20 (aluminum)		470 × 470 × t20 (aluminum)	
Brake specifications*7	Excitation voltage*8	V	24 VDC±10%			
	Current consumption (at 20°C)	A	0.70	0.70	0.70	0.66
	Static friction torque	N·m	9.3 min.	9.3 min.	9.3 min.	12 min.
	Attraction time	ms	100 max.	100 max.	100 max.	100 max.
	Release time*9	ms	30 max.	30 max.	30 max.	30 max.
	Backlash	°	1.0 max.	1.0 max.	1.0 max.	0.8 max.
	Allowable braking work	J	500	500	500	1,000
	Allowable total work	J	900,000	900,000	900,000	3,000,000
	Allowable angular acceleration	rad/s^2	10,000 max.			
	Brake lifetime (acceleration/deceleration)	---	10 million times min.			
	Brake lifetime (ON/OFF), B10d	---	1 million times min.			
	Insulation class	---	Class F			

Item		Model (R88M-) Unit	400 VAC 1AL75030C	1AL1K030C	1AL1K530C
Rated output*1*2		W	750	1,000	1,500
Rated torque*1*2		N·m	2.39	3.18	4.77
Rated rotation speed*1*2		r/min	3,000		
Maximum rotation speed		r/min	5,000		
Momentary maximum torque*1*3		N·m	7.16	9.55	14.3
Rated current*1*2		A (rms)	3.0	3.0	4.5
Momentary maximum current*1		A (rms)	9.6	9.6	14.1
Rotor inertia	Without brake	$\times 10^{-4}$ kg·m^2	1.305	2.105	2.105
	With brake	$\times 10^{-4}$ kg·m^2	1.755	2.555	2.555
Applicable load inertia		$\times 10^{-4}$ kg·m^2	38.6	35.3	47.6
Torque constant*1		N·m/ A (rms)	0.91	1.17	1.17
Power rate*1*5		kW/s	44	48	108
Mechanical time constant*5		ms	1.1	0.58	0.58
Electrical time constant		ms	4.3	5.9	5.9
Allowable radial load*6		N	490		
Allowable thrust load*6		N	196		
Weight	Without brake	kg	4.2	5.8	5.8
	With brake	kg	5.9	7.5	7.5
Radiator plate dimensions (material)		mm	305 × 305 × t20 (aluminum)	400 × 400 × t20 (aluminum)	
Brake specifications*7	Excitation voltage*8	V	24 VDC±10%		
	Current consumption (at 20°C)	A	0.70	0.70	0.70
	Static friction torque	N·m	9.3 min.	9.3 min.	9.3 min.
	Attraction time	ms	100 max.	100 max.	100 max.
	Release time*9	ms	30 max.	30 max.	30 max.
	Backlash	°	1.0 max.	1.0 max.	1.0 max.
	Allowable braking work	J	500	500	500
	Allowable total work	J	900,000	900,000	900,000
	Allowable angular acceleration	rad/s^2	10,000 max.		
	Brake lifetime (acceleration/deceleration)	---	10 million times min.		
	Brake lifetime (ON/OFF), B10d	---	1 million times min.		
	Insulation class	---	Class F		

Item		Model (R88M-) Unit	400 VAC 1AL2K030C	400 VAC 1AL3K030C
Rated output*1*2		W	2,000	3,000
Rated torque*1*2		N·m	6.37	9.55
Rated rotation speed*1*2		r/min	3,000	
Maximum rotation speed		r/min	5,000	
Momentary maximum torque*1*3		N·m	19.1	28.7
Rated current*1*2		A (rms)	6.3	8.7
Momentary maximum current*1		A (rms)	19.8	27.7
Rotor inertia	Without brake	$\times 10^{-4}$ kg·m^2	2.405	6.813
	With brake	$\times 10^{-4}$ kg·m^2	2.855	7.313
Applicable load inertia		$\times 10^{-4}$ kg·m^2	60.2	118
Torque constant*1		N·m/A (rms)	1.15	1.23
Power rate*1*5		kW/s	169	134
Mechanical time constant*5		ms	0.52	0.49
Electrical time constant		ms	6.3	11
Allowable radial load*6		N	490	
Allowable thrust load*6		N	196	
Weight	Without brake	kg	6.5	11.5
	With brake	kg	8.2	13.5
Radiator plate dimensions (material)		mm	470 × 470 × t20 (aluminum)	
Brake specifications*7	Excitation voltage*8	V	24 VDC±10%	
	Current consumption (at 20°C)	A	0.70	0.66
	Static friction torque	N·m	9.3 min.	12 min.
	Attraction time	ms	100 max.	100 max.
	Release time*9	ms	30 max.	30 max.
	Backlash	°	1.0 max.	0.8 max.
	Allowable braking work	J	500	1,000
	Allowable total work	J	900,000	3,000,000
	Allowable angular acceleration	rad/s^2	10,000 max.	
	Brake lifetime (acceleration/deceleration)	---	10 million times min.	
	Brake lifetime (ON/OFF), B10d	---	1 million times min.	
	Insulation class	---	Class F	

*1. This is a typical value for when the Servomotor is used at a normal temperature (20°C, 65%) in combination with a Servo Drive.

*2. The rated values are the values with which continuous operation is possible at an ambient temperature of 40°C when the Servomotor is horizontally installed on a specified radiator plate.

*3. The momentary maximum torque is approximately 300% of the rated torque except for some models.

*4. The momentary maximum torque is approximately 350% of the rated torque. The detection time of the overload protection function is short when the momentary maximum torque is output. Refer to *3-1-18 Overload Characteristics (Electronic Thermal Function)* on page 3-28.

*5. This value is for models without options.

*6. The allowable radial and thrust loads are the values determined for a limit of 20,000 hours at normal operating temperatures.
The allowable radial loads are applied as shown in the following diagram.

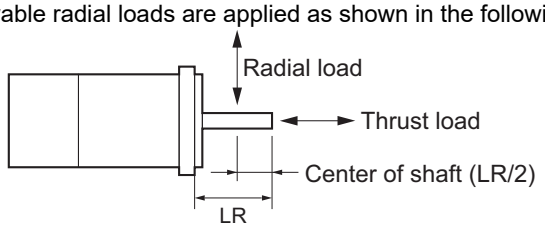

*7. When the brake is released for a vertical axis, refer to *7-6 Brake Interlock* on page 7-22 to set an appropriate value for **Brake Interlock Output** (4610 hex).

*8. This is a non-excitation brake. It is released when excitation voltage is applied.

*9. This value is a reference value.

● Torque-Rotation Speed Characteristics for 3,000-r/min Servomotors (200 VAC)

The following graphs show the characteristics with a 3-m standard cable and a 3-phase 200-VAC or single-phase 220-VAC input.

• R88M-1AM20030T

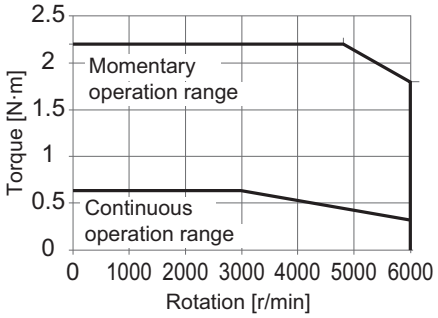

• R88M-1AM40030T

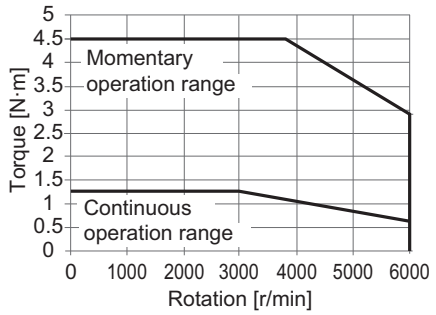

• R88M-1AM75030T

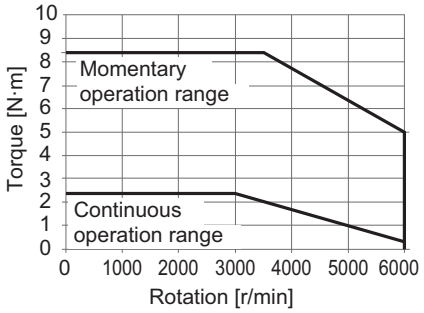

• R88M-1AL1K030T

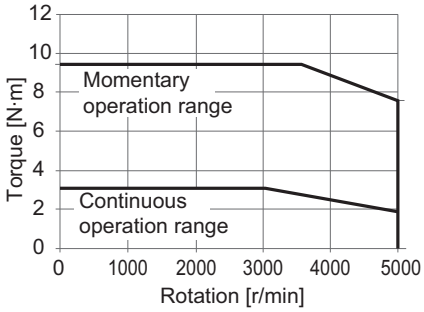

• R88M-1AL1K530T

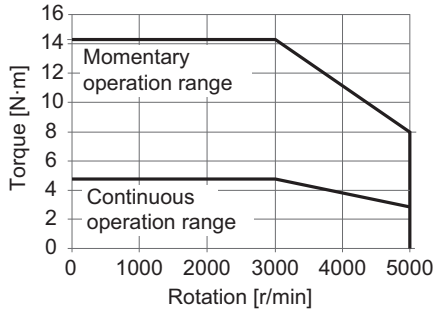

• R88M-1AL2K030T

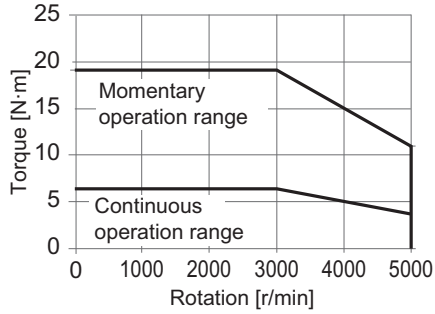

• R88M-1AL2K630T

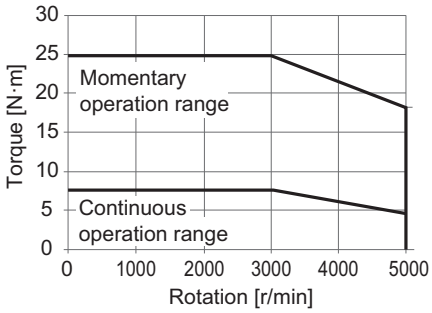

Note The continuous operation range is the range in which continuous operation is possible at an ambient temperature of 40°C when the Servomotor is horizontally installed on a specified radiator plate.
Continuous operation at the maximum speed is also possible. However, doing so will reduce the output torque.

● Torque-Rotation Speed Characteristics for 3,000-r/min Servomotors (400 VAC)

The following graphs show the characteristics with a 3-m standard cable and a 3-phase 400-VAC input.

• R88M-1AL75030C

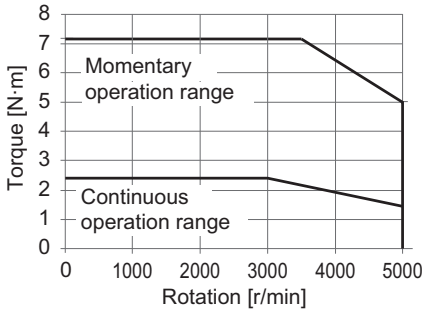

• R88M-1AL1K030C

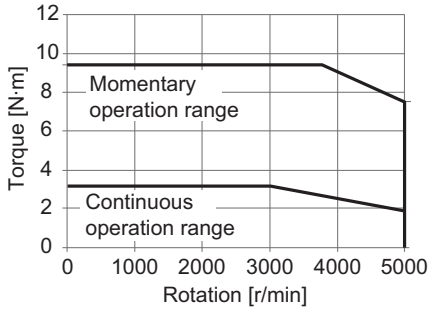

• R88M-1AL1K530C

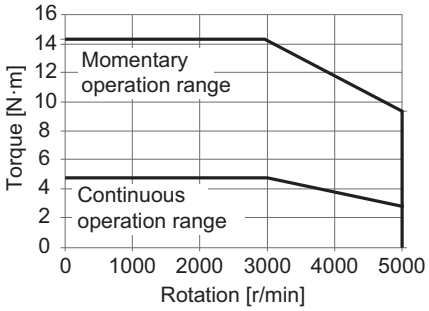

• R88M-1AL2K030C

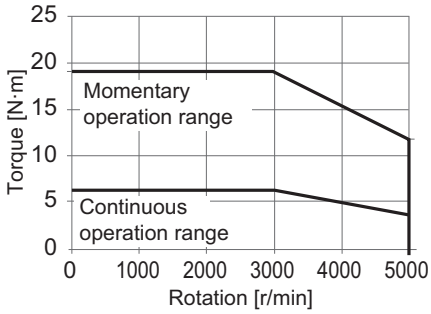

• R88M-1AL3K030C

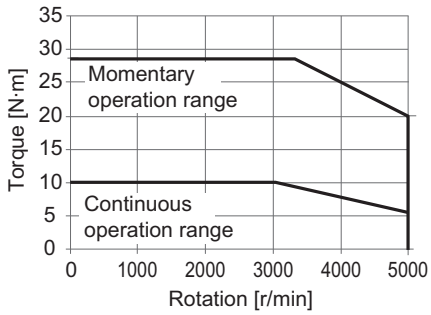

Note The continuous operation range is the range in which continuous operation is possible at an ambient temperature of 40°C when the Servomotor is horizontally installed on a specified radiator plate.
Continuous operation at the maximum speed is also possible. However, doing so will reduce the output torque.

1,500-r/min Servomotors

Item		Model (R88M-) / Unit	200 VAC 1AM1K515T	200 VAC 1AM2K715T
Rated output*1*2		W	1,500	2,700
Rated torque*1*2		N·m	9.55	17.2
Rated rotation speed*1*2		r/min	1,500	
Maximum rotation speed		r/min	3,000	
Momentary maximum torque*1		N·m	28.7	51.6
Rated current*1*2		A (rms)	8.6	14.6
Momentary maximum current*1		A (rms)	28.4	49.3
Rotor inertia	Without brake	$\times 10^{-4}$ kg·m^2	12.413	40.013
	With brake	$\times 10^{-4}$ kg·m^2	13.013	45.113
Applicable load inertia		$\times 10^{-4}$ kg·m^2	127.05	270.63
Torque constant*1		N·m/A (rms)	1.11	1.29
Power rate*1*3		kW/s	73	74
Mechanical time constant*3		ms	0.75	1.0
Electrical time constant		ms	17	19
Allowable radial load*4		N	490	1,176
Allowable thrust load*4		N	196	490
Weight	Without brake	kg	11	18
	With brake	kg	13	22
Radiator plate dimensions (material)		mm	470 × 470 × t20 (aluminum)	
Brake specifications*5	Excitation voltage*6	V	24 VDC±10%	
	Current consumption (at 20°C)	A	0.66	1.20
	Static friction torque	N·m	12 min.	22 min.
	Attraction time	ms	100 max.	120 max.
	Release time*7	ms	30 max.	50 max.
	Backlash	°	0.6 max.	0.8 max.
	Allowable braking work	J	1,000	1,400
	Allowable total work	J	3,000,000	4,600,000
	Allowable angular acceleration	rad/s^2	10,000 max.	
	Brake lifetime (acceleration/deceleration)	---	10 million times min.	
	Brake lifetime (ON/OFF), B10d	---	1 million times min.	
	Insulation class	---	Class F	

Item		Model (R88M-) Unit	400 VAC 1AM1K515C	400 VAC 1AM3K015C
Rated output*1*2		W	1,500	3,000
Rated torque*1*2		N·m	9.55	19.1
Rated rotation speed*1*2		r/min	1,500	
Maximum rotation speed		r/min	3,000	
Momentary maximum torque*1		N·m	28.7	57.3
Rated current*1*2		A (rms)	4.4	8.5
Momentary maximum current*1		A (rms)	14.1	28.3
Rotor inertia	Without brake	$\times 10^{-4}$ kg·m^2	12.413	40.013
	With brake	$\times 10^{-4}$ kg·m^2	13.013	45.113
Applicable load inertia		$\times 10^{-4}$ kg·m^2	127.05	270.63
Torque constant*1		N·m/A	2.21	2.46
Power rate*1*3		kW/s	73	91
Mechanical time constant*3		ms	0.75	1.2
Electrical time constant		ms	17	16
Allowable radial load*4		N	490	1,176
Allowable thrust load*4		N	196	490
Weight	Without brake	kg	11	18
	With brake	kg	13	22
Radiator plate dimensions (material)		mm	470 × 470 × t20 (aluminum)	
Brake specifications*5	Excitation voltage*6	V	24 VDC±10%	
	Current consumption (at 20°C)	A	0.66	1.20
	Static friction torque	N·m	12 min.	22 min.
	Attraction time	ms	100 max.	120 max.
	Release time*7	ms	30 max.	50 max.
	Backlash	°	0.6 max.	0.8 max.
	Allowable braking work	J	1,000	1,400
	Allowable total work	J	3,000,000	4,600,000
	Allowable angular acceleration	rad/s^2	10,000 max.	
	Brake lifetime (acceleration/deceleration)	---	10 million times min.	
	Brake lifetime (ON/OFF), B10d	---	1 million times min.	
	Insulation class	---	Class F	

*1. This is a typical value for when the Servomotor is used at a normal temperature (20°C, 65%) in combination with a Servo Drive.

*2. The rated values are the values with which continuous operation is possible at an ambient temperature of 40°C when the Servomotor is horizontally installed on a specified radiator plate.

*3. This value is for models without options.

*4. The allowable radial and thrust loads are the values determined for a limit of 20,000 hours at normal operating temperatures.
The allowable radial loads are applied as shown in the following diagram.

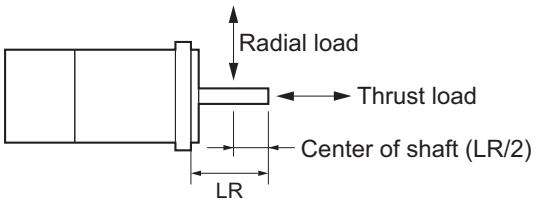

*5. When the brake is released for a vertical axis, refer to *7-6 Brake Interlock* on page 7-22 to set an appropriate value for **Brake Interlock Output** (4610 hex).

*6. This is a non-excitation brake. It is released when excitation voltage is applied.

*7. This value is a reference value.

● Torque-Rotation Speed Characteristics for 1,500-r/min Servomotors (200 VAC)

The following graphs show the characteristics with a 3-m standard cable and a 3-phase or single-phase 220-VAC input.

• R88M-1AM1K515T

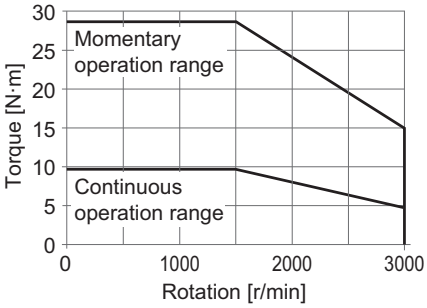

• R88M-1AM2K715T

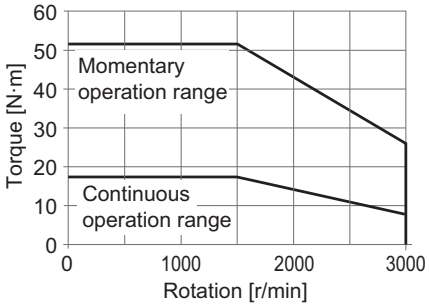

Note The continuous operation range is the range in which continuous operation is possible at an ambient temperature of 40°C when the Servomotor is horizontally installed on a specified radiator plate.
Continuous operation at the maximum speed is also possible. However, doing so will reduce the output torque.

● Torque-Rotation Speed Characteristics for 1,500-r/min Servomotors (400 VAC)

The following graphs show the characteristics with a 3-m standard cable and a 3-phase 400-VAC input.

• R88M-1AM1K515C

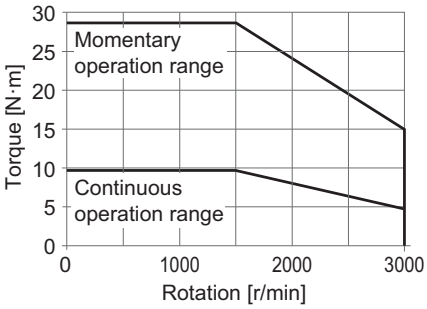

• R88M-1AM3K015C

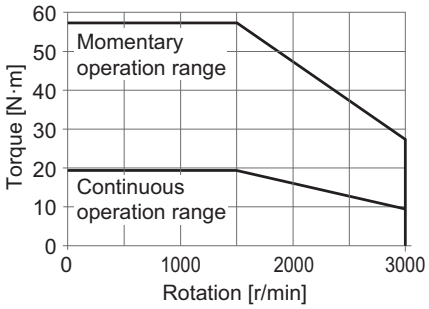

Note The continuous operation range is the range in which continuous operation is possible at an ambient temperature of 40°C when the Servomotor is horizontally installed on a specified radiator plate.
Continuous operation at the maximum speed is also possible. However, doing so will reduce the output torque.

3-3 Decelerator Specifications

The following tables list the Decelerator models for 1S-series Servomotors Advance Type. Select an appropriate model based on the Servomotor rated output.

Backlash: 3 Arcminutes Max.

● For 3,000-r/min Servomotors

Servo-motor rated output	Reduc-tion ratio	Model	Rated rota-tion speed	Rated torque	Effi-ciency	Momen-tary maxi-mum rotation speed	Momen-tary maxi-mum torque	Decelerator inertia	Allow-able radial load	Allow-able thrust load	Weight
			r/min	N·m	%	r/min	N·m	$\times 10^{-4}$ kg·m^2	N	N	kg
200 W	1/5	R88G-HPG14A05200B□	600	2.4	75.4	1200	9.7	0.207	221	883	1.0
	1/11	R88G-HPG14A11200B□	272	5.8	82.6	545	21.8	0.197	280	1119	1.1
	1/21	R88G-HPG20A21200B□	142	10.2	76.2	285	41.7	0.49	800	2817	2.9
	1/33	R88G-HPG20A33200B□	90	17.0	80.6	181	66.5	0.45	916	3226	2.9
	1/45	R88G-HPG20A45200B□	66	23.5	82.1	133	91.1	0.45	1006	3541	2.9
400 W	1/5	R88G-HPG14A05400B□	600	5.3	84.2	1200	20.4	0.207	221	883	1.1
	1/11	R88G-HPG20A11400B□	272	11.4	81.6	545	45.5	0.57	659	2320	2.9
	1/21	R88G-HPG20A21400B□	142	23.0	86.1	285	88.1	0.49	800	2817	2.9
	1/33	R88G-HPG32A33400B□	90	33.8	80.7	181	136.2	0.62	1565	6240	7.5
	1/45	R88G-HPG32A45400B□	66	46.6	81.5	133	186.1	0.61	1718	6848	7.5
750 W (200 V)	1/5	R88G-HPG20A05750B□	600	9.9	82.9	1200	38.7	0.68	520	1832	2.9
	1/11	R88G-HPG20A11750B□	272	20.0*1	87.2	545	86.7	0.6	659	2320	3.1
	1/21	R88G-HPG32A21750B□	142	42.1	84.0	285	163.3	3.0	1367	5448	7.8
	1/33	R88G-HPG32A33750B□	90	69.3	87.9	181	259.7	2.7	1565	6240	7.8
	1/45	R88G-HPG32A45750B□	66	94.9	88.3	133	299.0*2	2.7	1718	6848	7.8
750 W (400 V)	1/5	R88G-HPG32A052K0B□	600	7.7	64.3	1000	30.6	3.8	889	3542	7.4
	1/11	R88G-HPG32A112K0B□	272	20.5	78.0	454	70.9	3.4	1126	4488	7.9
	1/21	R88G-HPG32A211K5B□	142	42.1	84.0	238	138.3	3.0	1367	5448	7.9
	1/33	R88G-HPG32A33600SB□	90	69.3	87.9	151	220.4	2.7	1565	6240	7.9
1 kW	1/5	R88G-HPG32A052K0B□	600	11.5	72.2	1000	42.0	3.8	889	3542	7.4
	1/11	R88G-HPG32A112K0B□	272	28.9	82.5	454	96.1	3.4	1126	4488	7.9
	1/21	R88G-HPG32A211K5B□	142	58.1	86.9	238	186.5	3.0	1367	5448	7.9
1.5 kW	1/5	R88G-HPG32A052K0B□	600	19.1	80.1	1000	64.8	3.8	889	3542	7.4
	1/11	R88G-HPG32A112K0B□	272	45.7	87.0	454	146.3	3.4	1126	4488	7.9
	1/21	R88G-HPG32A211K5B□	142	90.1	90.0	238	282.2	3.0	1367	5448	7.9
2 kW	1/5	R88G-HPG32A052K0B□	600	26.8	84.1	1000	87.9	3.8	889	3542	7.4
	1/11	R88G-HPG32A112K0B□	272	62.5	89.3	454	197.0	3.4	1126	4488	7.9
2.6 kW (200 V)	1/5	R88G-HPG32A053K0B□	600	36.0	86.8	1000	115.2	3.8	889	3542	7.3
3 kW (400 V)	1/5	R88G-HPG32A053K0B□	600	42.0	88.1	1000	134.0	3.8	889	3542	7.3

*1. The value is the allowable continuous output torque of the Decelerator. Take care so that this value is not exceeded.

*2. The value is the maximum allowable torque of the Decelerator. Take care so that this value is not exceeded.

Note 1. The Decelerator inertia is the Servomotor shaft conversion value.
2. The protective structure rating of the Servomotor with the Decelerator is IP44.
3. The Allowable radial load column shows the values obtained at the center of the shaft (T/2).

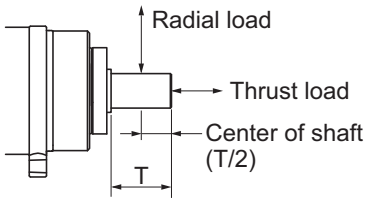

4. The standard shaft type is a straight shaft. A model with a key and tap is indicated with “J” at □ of the model number.
5. Take care so that the surface temperature of the Decelerator does not exceed 70°C.

● For 1,500-r/min Servomotors

Servo-motor rated output	Reduc-tion ratio	Model	Rated rota-tion speed	Rated torque	Effi-ciency	Momen-tary maxi-mum rotation speed	Momen-tary maxi-mum torque	Decelerator inertia	Allow-able radial load	Allow-able thrust load	Weight
			r/min	N·m	%	r/min	N·m	$\times 10^{-4}$ kg·m^2	N	N	kg
1.5 kW	1/5	R88G-HPG32A053K0B□	300	43.8	91.7	600	135.7	3.8	889	3,542	7.3
	1/11	R88G-HPG32A112K0SB□	136	98.1	93.4	272	299.0*1	3.4	1,126	4,488	7.8
	1/21	R88G-HPG50A21900TB□	71	187.2	93.3	142	573.2	7.0	3,611	12,486	19.1
	1/33	R88G-HPG50A33900TB□	45	294.1*2	94.1	90	849.0*1	5.9	4,135	14,300	19.1
2.7 kW (200 V)	1/5	R88G-HPG50A055K0SB□	300	79.2	92.1	600	244.3	11	2347	8118	22.0
	1/11	R88G-HPG50A115K0SB□	136	177.8	94.0	272	541.1	8.4	2974	10285	23.5
	1/20	R88G-HPG65A205K0SB□	75	315.6	91.7	150	976.0	14	7338	26799	55.4
	1/25	R88G-HPG65A255K0SB□	60	396.8	92.3	120	1222.4	14	7846	28654	55.4
3 kW (400 V)	1/5	R88G-HPG50A055K0SB□	300	88.3	92.5	600	271.7	11	2,347	8,118	22.0
	1/11	R88G-HPG50A115K0SB□	136	197.9	94.2	272	601.2	8.4	2,974	10,285	23.5
	1/20	R88G-HPG65A205K0SB□	75	352.0	92.2	150	1,085.5	14	7,338	26,799	55.4
	1/25	R88G-HPG65A255K0SB□	60	442.4	92.7	120	1,359.2	14	7,846	28,654	55.4

*1. Maximum allowable Decelerator torque. Be careful not to exceed this value.
*2. Allowable Decelerator continuous output torque. Be careful not to exceed this value.

Note 1. The Decelerator inertia is the Servomotor shaft conversion value.
2. The protective structure rating of the Servomotor with the Decelerator is IP44.
3. The Allowable radial load column shows the values obtained at the center of the shaft (T/2).

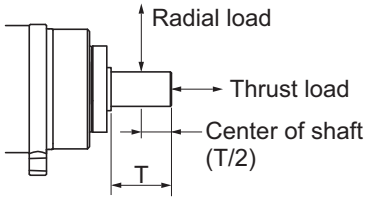

4. The standard shaft type is a straight shaft. A model with a key and tap is indicated with “J” at □ of the model number.
5. Take care so that the surface temperature of the Decelerator does not exceed 70°C.

Backlash: 15 Arcminutes Max.

● For 3,000-r/min Servomotors

Servo-motor rated output	Reduc-tion ratio	Model	Rated rota-tion speed	Rated torque	Effi-ciency	Momen-tary maximum rotation speed	Momen-tary maximum torque	Decelerator inertia	Allow-able radial load	Allow-able thrust load	Weight
			r/min	N·m	%	r/min	N·m	$\times 10^{-4}$ kg·m^2	N	N	kg
200 W	1/5	R88G-VRXF05B200CJ	600	2.93	92	1200	9.94*1	0.147	392	196	0.72
	1/9	R88G-VRXF09C200CJ	333	4.76	83	666	16.43	0.273	931	465	1.70
	1/15	R88G-VRXF15C200CJ	200	8.22	86	400	28.38	0.302	1176	588	2.10
	1/25	R88G-VRXF25C200CJ	120	13.70	86	240	47.30	0.293	1323	661	2.10
400 W	1/5	R88G-VRXF05C400CJ	600	5.59	88	1200	19.80	0.370	784	392	1.70
	1/9	R88G-VRXF09C400CJ	333	10.06	88	667	34.00*1	0.273	931	465	1.70
	1/15	R88G-VRXF15C400CJ	200	16.95	89	400	56.70*1	0.302	1176	588	2.10
	1/25	R88G-VRXF25C400CJ	120	28.26	89	240	92.40*1	0.293	1323	661	2.10
750 W (200 V)	1/5	R88G-VRXF05C750CJ	600	10.99	92	1200	38.64	0.817	784	392	2.10
	1/9	R88G-VRXF09D750CJ	333	19.57	91	667	63.70*1	0.755	1176	588	3.40
	1/15	R88G-VRXF15D750CJ	200	31.91	89	400	106.00*1	0.685	1372	686	3.80
	1/25	R88G-VRXF25D750CJ	120	53.18	89	240	177.00*1	0.658	1617	808	3.80

*1. Maximum allowable Decelerator torque. Be careful not to exceed this value.

Note 1. The Decelerator inertia is the Servomotor shaft conversion value.

2. The protective structure rating of the Servomotor combined with the Decelerator is IP44. (Excluding decelerator and servo motor connecting parts.)

3. The Allowable radial load column shows the values obtained at the center of the shaft (T/2).

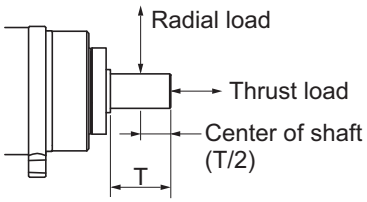

4. The standard shaft type is a shaft with key and tap. (The key is temporarily assembled to the shaft.)

5. Take care so that the surface temperature of the Decelerator does not exceed 90°C.

3-4 Cable and Connector Specifications

This section describes the specifications of the cables connecting Servo Drives/Servomotors and the connectors for use.

Select the cables according to the Servomotors to be used.

Precautions for Correct Use

Requirements of cables vary in the user's country. In some cases, the requirements vary in installation areas/sites even within the country. Confirm the cables that conform with laws/standards in the country to each certification body.

3-4-1 Integrated Cable Specifications

These cables are used to connect the Servo Drive and Servomotor. Select an appropriate cable for the Servomotor to be used.

Precautions for Correct Use

Do not lay the cables close to each other.

Cables without Brake Wire

● R88A-CX1A□□□SF

Applicable Servomotors

200 V:

3,000-r/min Servomotors of 200 W, 400 W, and 750 W

Cable types

Model	Length [L]	Outer diameter of sheath	Minimum bending radius	Weight
R88A-CX1A003SF	3 m	11.9 mm dia.	119 mm	Approx. 0.9 kg
R88A-CX1A005SF	5 m			Approx. 1.2 kg
R88A-CX1A010SF	10 m			Approx. 2.0 kg
R88A-CX1A015SF	15 m			Approx. 2.8 kg
R88A-CX1A020SF	20 m			Approx. 3.7 kg

Connection configuration and external dimensions [mm]

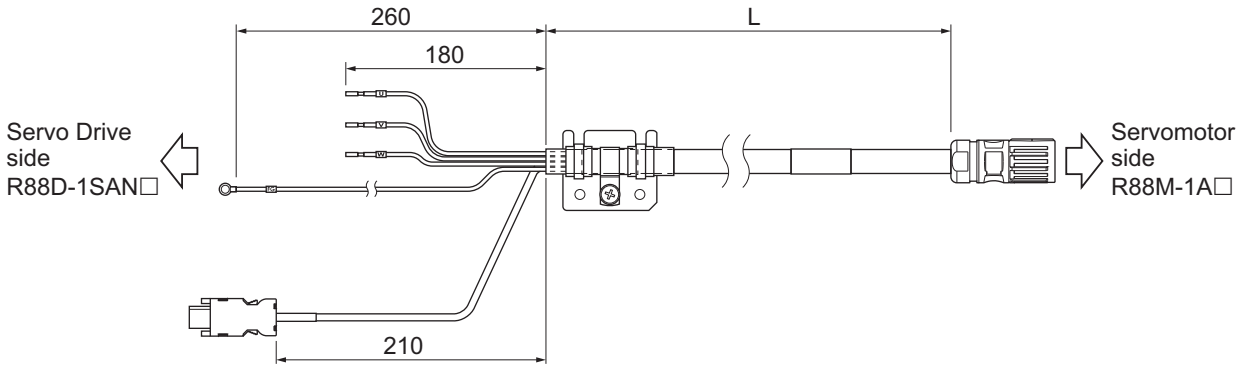

Wiring

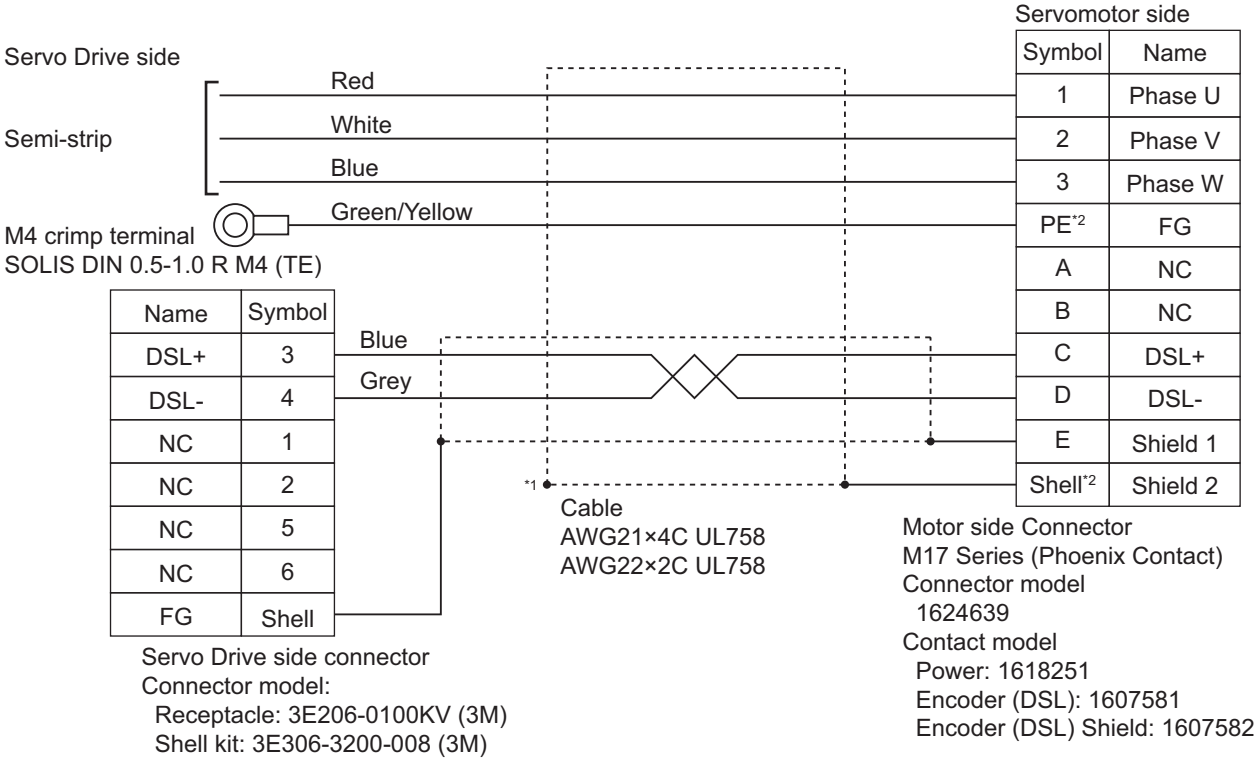

Name	Symbol
DSL+	3
DSL-	4
NC	1
NC	2
NC	5
NC	6
FG	Shell

Symbol	Name
1	Phase U
2	Phase V
3	Phase W
PE*2	FG
A	NC
B	NC
C	DSL+
D	DSL-
E	Shield 1
Shell*2	Shield 2

*1. Connect the cable to the servo drive enclosure using the shield clamp.

*2. PE and shell are set in the connectors at Servomotor's side.

● R88A-CX1B□□□SF

Applicable Servomotors

200 V:

3,000-r/min Servomotors of 1 kW

Cable types

Model	Length [L]	Outer diameter of sheath	Minimum bending radius	Weight
R88A-CX1B003SF	3 m	14.5 mm dia.	145 mm	Approx. 1.3 kg
R88A-CX1B005SF	5 m			Approx. 1.8 kg
R88A-CX1B010SF	10 m			Approx. 3.1 kg
R88A-CX1B015SF	15 m			Approx. 4.4 kg
R88A-CX1B020SF	20 m			Approx. 5.8 kg

Connection configuration and external dimensions [mm]

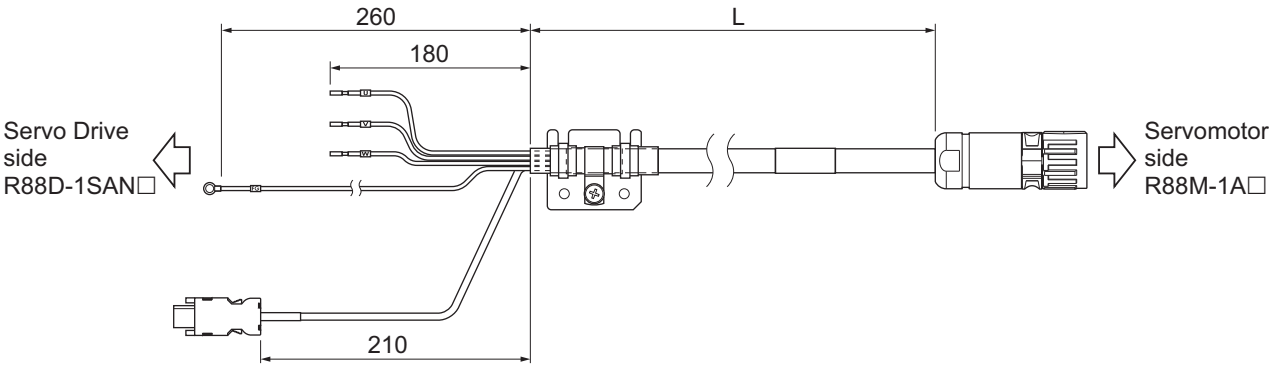

Wiring

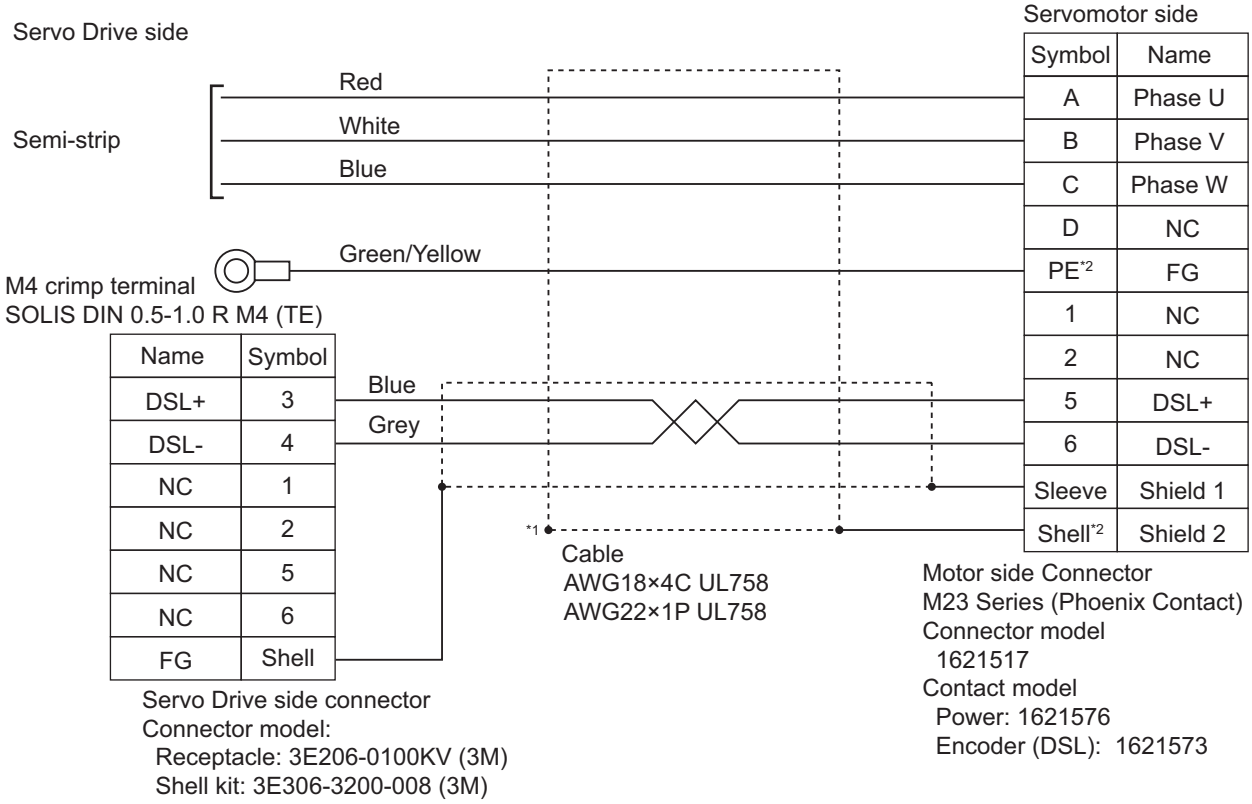

Name	Symbol
DSL+	3
DSL-	4
NC	1
NC	2
NC	5
NC	6
FG	Shell

Symbol	Name
A	Phase U
B	Phase V
C	Phase W
D	NC
PE*2	FG
1	NC
2	NC
5	DSL+
6	DSL-
Sleeve	Shield 1
Shell*2	Shield 2

*1. Connect the cable to the servo drive enclosure using the shield clamp.

*2. PE and shell are set in the connectors at Servomotor's side.

● R88A-CX1C□□□SF

Applicable Servomotors

200 V:

3,000-r/min Servomotors of 1.5 kW

1,500-r/min Servomotors of 1.5 kW

400 V:

3,000-r/min Servomotors of 750 W, 1 kW, 1.5 kW, 2 kW, and 3 kW

1,500-r/min Servomotors of 1.5 kW and 3 kW

Cable types

Model	Length [L]	Outer diameter of sheath	Minimum bending radius	Weight
R88A-CX1C003SF	3 m	14.5 mm dia.	145 mm	Approx. 1.3 kg
R88A-CX1C005SF	5 m			Approx. 1.8 kg
R88A-CX1C010SF	10 m			Approx. 3.1 kg
R88A-CX1C015SF	15 m			Approx. 4.4 kg
R88A-CX1C020SF	20 m			Approx. 5.8 kg

Connection configuration and external dimensions [mm]

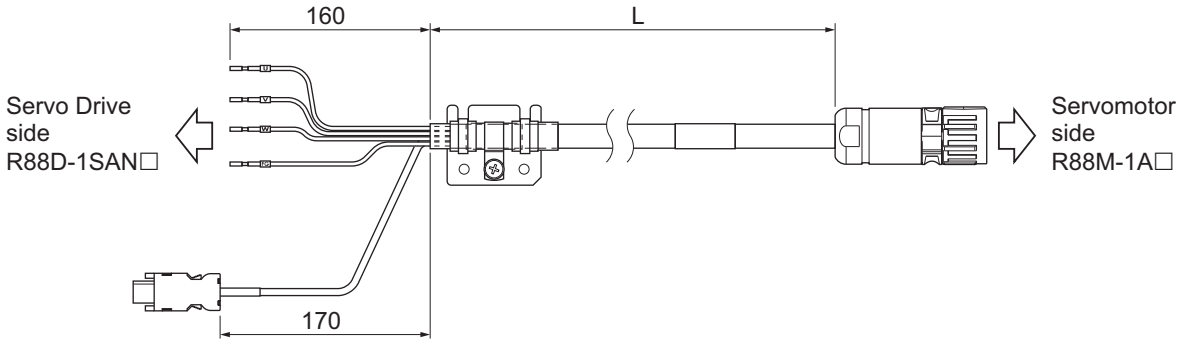

Wiring

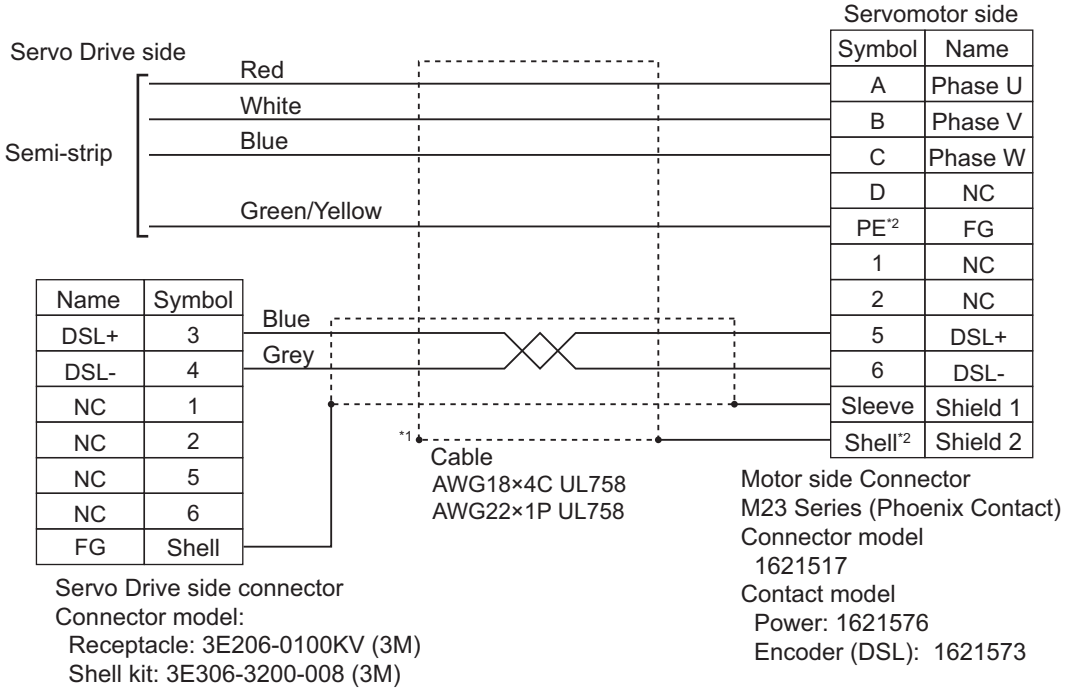

*1. Connect the cable to the servo drive enclosure using the shield clamp.

*2. PE and shell are set in the connectors at Servomotor's side.

● R88A-CX1D□□□SF

Applicable Servomotors

200 V:

3,000-r/min Servomotors of 2 kW and 2.6 kW

1,500-r/min Servomotors of 2.7 kW

Cable types

Model	Length [L]	Outer diameter of sheath	Minimum bending radius	Weight
R88A-CX1D003SF	3 m	14.9 mm dia.	149 mm	Approx. 1.4 kg
R88A-CX1D005SF	5 m			Approx. 2.0 kg
R88A-CX1D010SF	10 m			Approx. 3.5 kg
R88A-CX1D015SF	15 m			Approx. 5.1 kg
R88A-CX1D020SF	20 m			Approx. 6.7 kg

Connection configuration and external dimensions [mm]

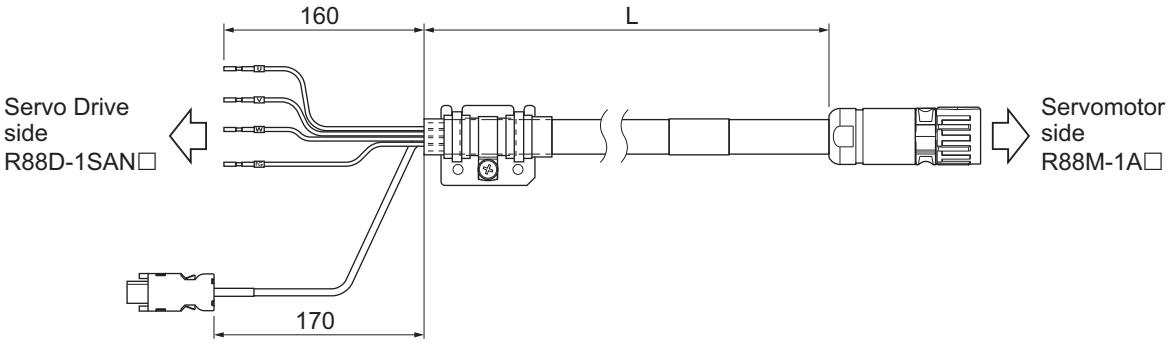

Wiring

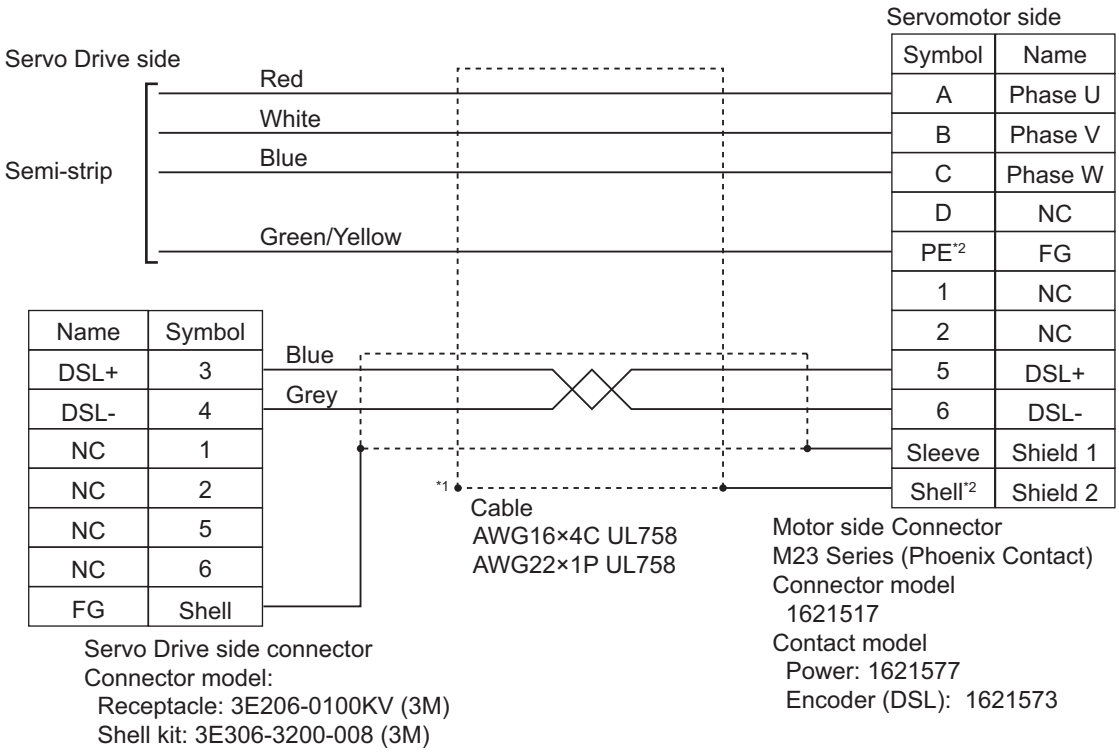

*1. Connect the cable to the servo drive enclosure using the shield clamp.

*2. PE and shell are set in the connectors at Servomotor's side.

Cables with Brake Wire

● R88A-CX1A□□□BF

Applicable Servomotors
200 V:
3,000-r/min Servomotors of 200 W, 400 W, and 750 W

Cable types

Model	Length [L]	Outer diameter of sheath	Minimum bending radius	Weight
R88A-CX1A003BF	3 m	11.8 mm dia.	118 mm	Approx. 0.9 kg
R88A-CX1A005BF	5 m			Approx. 1.2 kg
R88A-CX1A010BF	10 m			Approx. 2.1 kg
R88A-CX1A015BF	15 m			Approx. 2.9 kg
R88A-CX1A020BF	20 m			Approx. 3.8 kg

Connection configuration and external dimensions [mm]

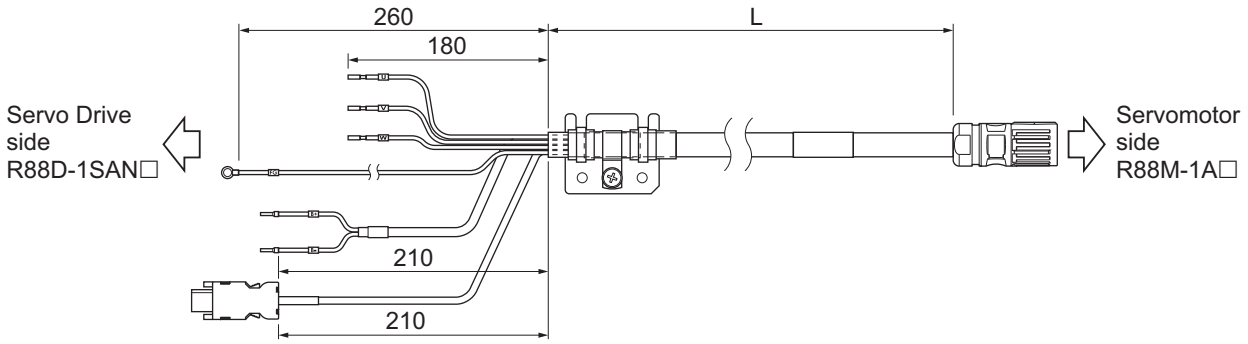

Wiring

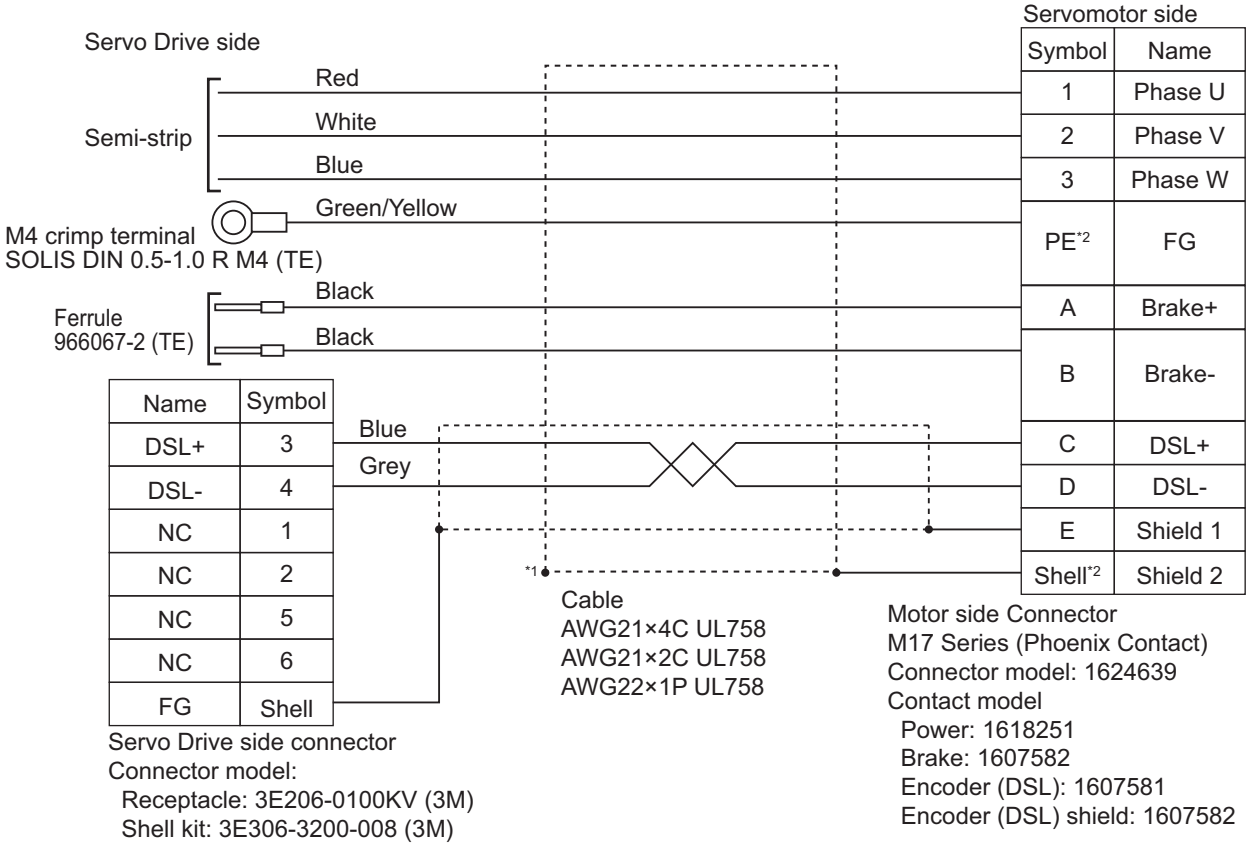

*1. Connect the cable to the servo drive enclosure using the shield clamp.

*2. PE and shell are set in the connectors at Servomotor's side.

● R88A-CX1B□□□BF

Applicable Servomotors

200 V:

3,000-r/min Servomotors of 1 kW

Cable types

Model	Length [L]	Outer diameter of sheath	Minimum bending radius	Weight
R88A-CX1B003BF	3 m	14.5 mm dia.	145 mm	Approx. 1.3 kg
R88A-CX1B005BF	5 m			Approx. 1.8 kg
R88A-CX1B010BF	10 m			Approx. 3.1 kg
R88A-CX1B015BF	15 m			Approx. 4.4 kg
R88A-CX1B020BF	20 m			Approx. 5.8 kg

Connection configuration and external dimensions [mm]

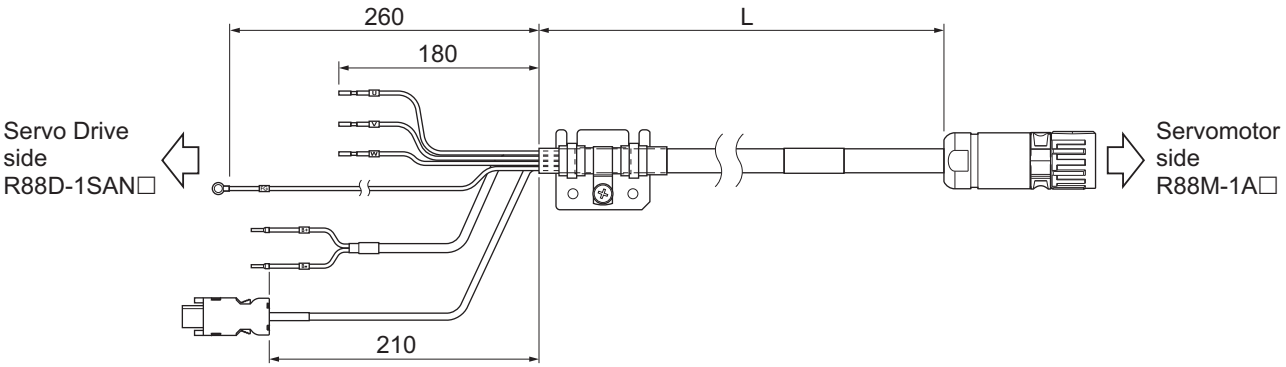

Wiring

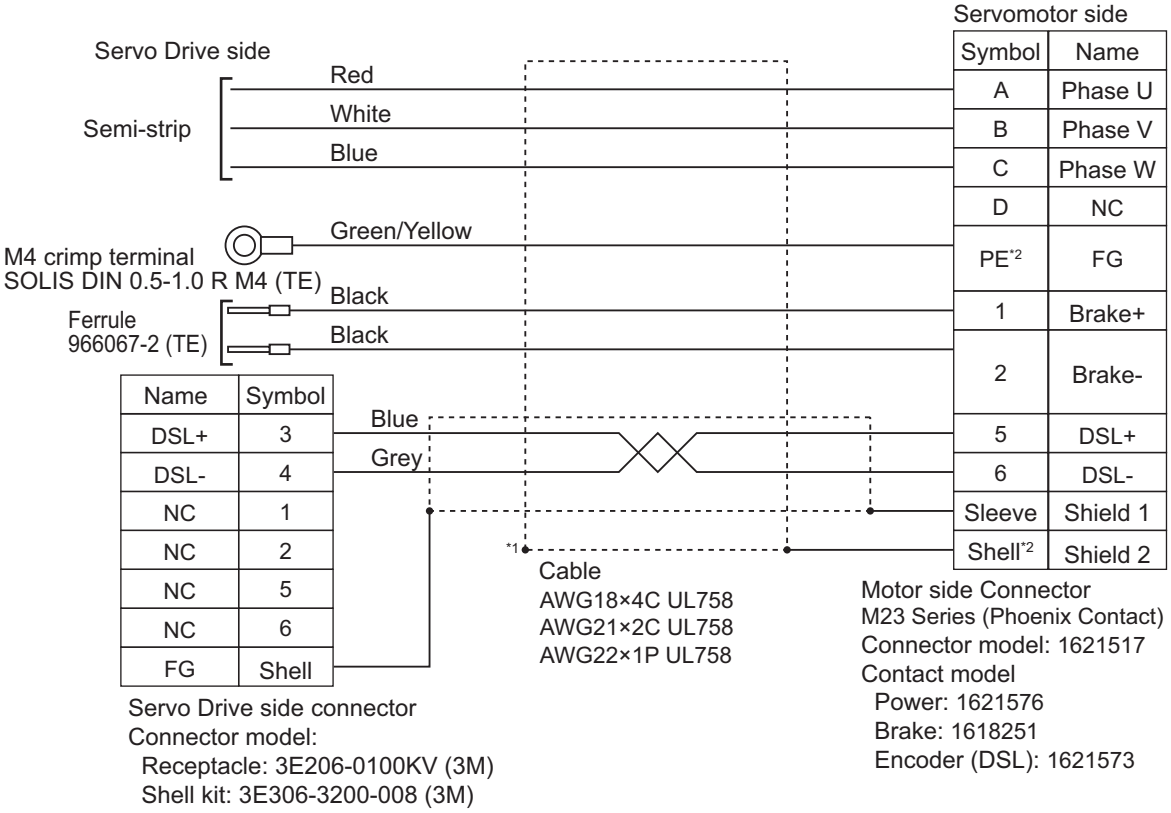

Name	Symbol
DSL+	3
DSL-	4
NC	1
NC	2
NC	5
NC	6
FG	Shell

Symbol	Name
A	Phase U
B	Phase V
C	Phase W
D	NC
PE*2	FG
1	Brake+
2	Brake-
5	DSL+
6	DSL-
Sleeve	Shield 1
Shell*2	Shield 2

*1. Connect the cable to the servo drive enclosure using the shield clamp.

*2. PE and shell are set in the connectors at Servomotor's side.

● R88A-CX1C□□□BF

Applicable Servomotors

200 V:

3,000-r/min Servomotors of 1.5 kW

1,500-r/min Servomotors of 1.5 kW

400 V:

3,000-r/min Servomotors of 750 W, 1 kW, 1.5 kW, 2 kW, and 3 kW

1,500-r/min Servomotors of 1.5 kW and 3 kW

Cable types

Model	Length [L]	Outer diameter of sheath	Minimum bending radius	Weight
R88A-CX1C003BF	3 m	14.5 mm dia.	145 mm	Approx. 1.3 kg
R88A-CX1C005BF	5 m			Approx. 1.8 kg
R88A-CX1C010BF	10 m			Approx. 3.1 kg
R88A-CX1C015BF	15 m			Approx. 4.4 kg
R88A-CX1C020BF	20 m			Approx. 5.8 kg

Connection configuration and external dimensions [mm]

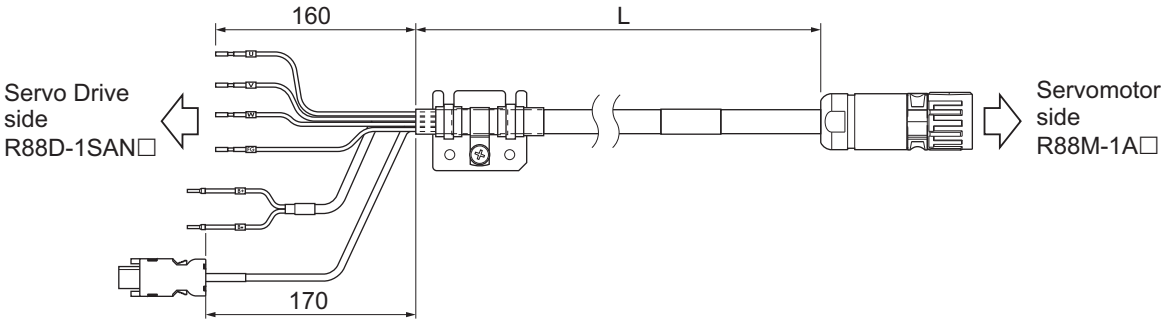

Wiring

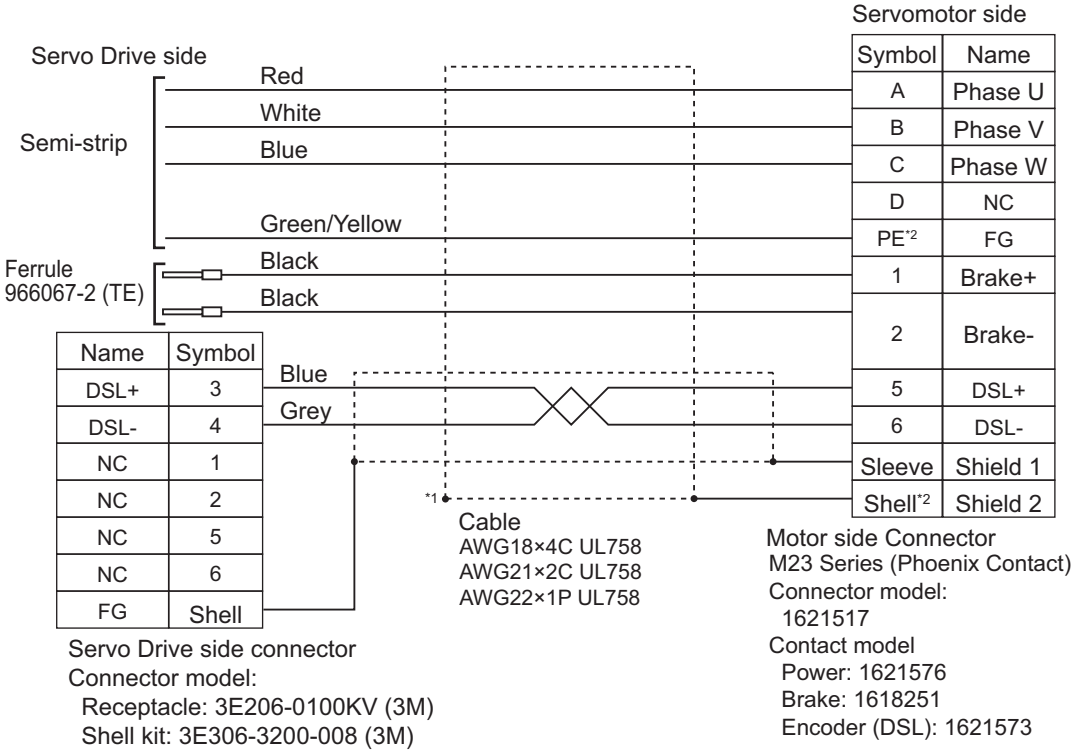

*1. Connect the cable to the servo drive enclosure using the shield clamp.

*2. PE and shell are set in the connectors at Servomotor's side.

● R88A-CX1D□□□BF

Applicable Servomotors

200 V:

3,000-r/min Servomotors of 2 kW and 2.6 kW

1,500-r/min Servomotors of 2.7 kW

Cable types

Model	Length [L]	Outer diameter of sheath	Minimum bending radius	Weight
R88A-CX1D003BF	3 m	14.9 mm dia.	149 mm	Approx. 1.4 kg
R88A-CX1D005BF	5 m			Approx. 2.0 kg
R88A-CX1D010BF	10 m			Approx. 3.5 kg
R88A-CX1D015BF	15 m			Approx. 5.1 kg
R88A-CX1D020BF	20 m			Approx. 6.7 kg

Connection configuration and external dimensions [mm]

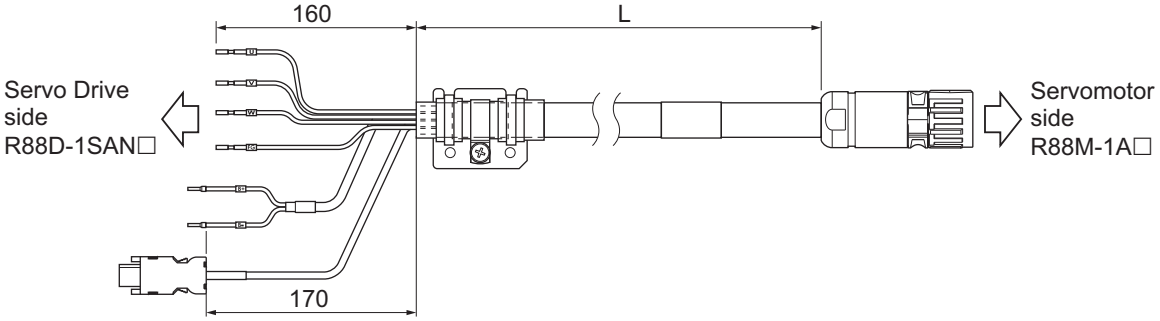

Wiring

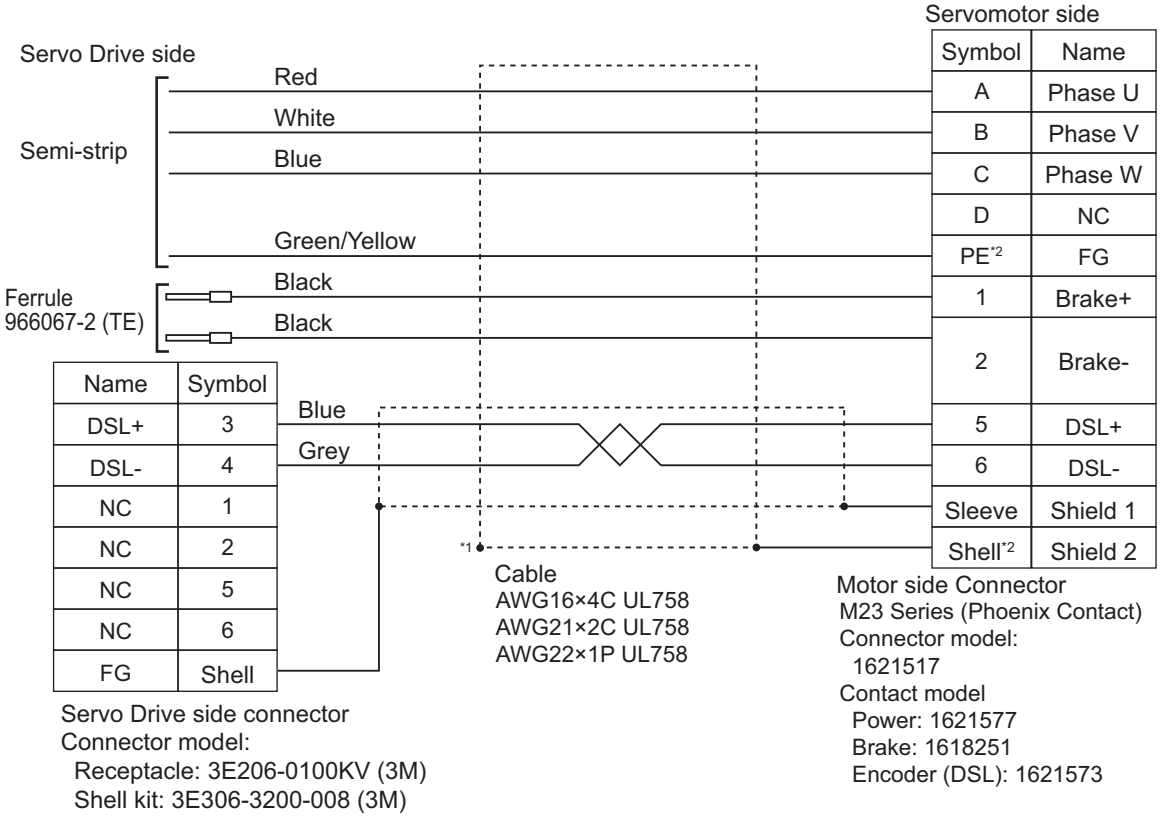

*1. Connect the cable to the servo drive enclosure using the shield clamp.

*2. PE and shell are set in the connectors at Servomotor's side.

Extension Cable

● R88A-CX1AE□□BF

Applicable Servomotors

200 V:

3,000-r/min Servomotors of 200 W, 400 W and 750 W

Cable types

Model	Length [L]	Outer diameter of sheath	Minimum bending radius	Weight
R88A-CX1AE10BF	10 m	11.8 mm dia.	118 mm	Approx. 2.0 kg
R88A-CX1AE20BF	20 m			Approx. 3.8 kg

Connection configuration and external dimensions [mm]

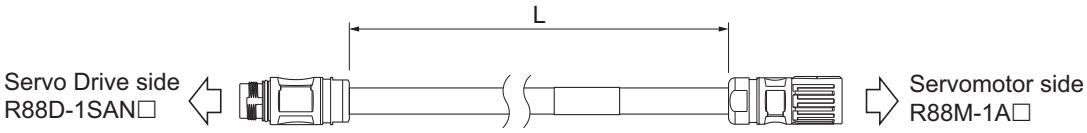

Wiring

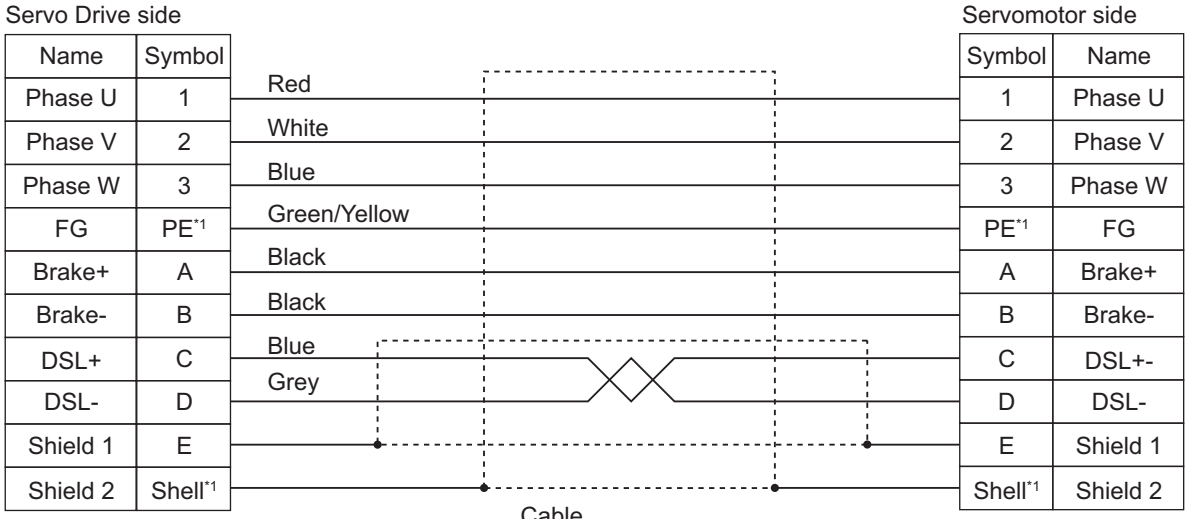

Servo Drive side Connector
M17 Series (Phoenix Contact)
Connector model
1624653
Contact model
Power: 1618256
Brake: 1607579
Encoder (DSL): 1607578
Encoder (DSL) shield: 1607579

Cable
AWG21×4C UL758
AWG21×2C UL758
AWG22×1P UL758

Motor side Connector
M17 Series (Phoenix Contact)
Connector model
1624639
Contact model
Power: 1618251
Brake: 1607582
Encoder (DSL): 1607581
Encoder (DSL) shield: 1607582

*1. PE and shell are set in the connectors at Servo Drive's side and Servomotor's side.

● R88A-CX1BE□□BF

Applicable Servomotors

200 V:

3,000-r/min Servomotors of 1 kW and 1.5 kW

1,500-r/min Servomotors of 1.5 kW

400 V:

3,000-r/min Servomotors of 750 W, 1 kW, 1.5 kW, 2 kW, and 3 kW

1,500-r/min Servomotors of 1.5 kW and 3 kW

Cable types

Model	Length [L]	Outer diameter of sheath	Minimum bending radius	Weight
R88A-CX1BE10BF	10 m	14.5 mm dia.	145 mm	Approx. 3.1 kg
R88A-CX1BE20BF	20 m			Approx. 5.8 kg

Connection configuration and external dimensions [mm]

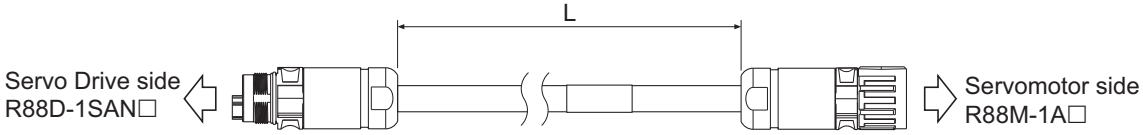

Wiring

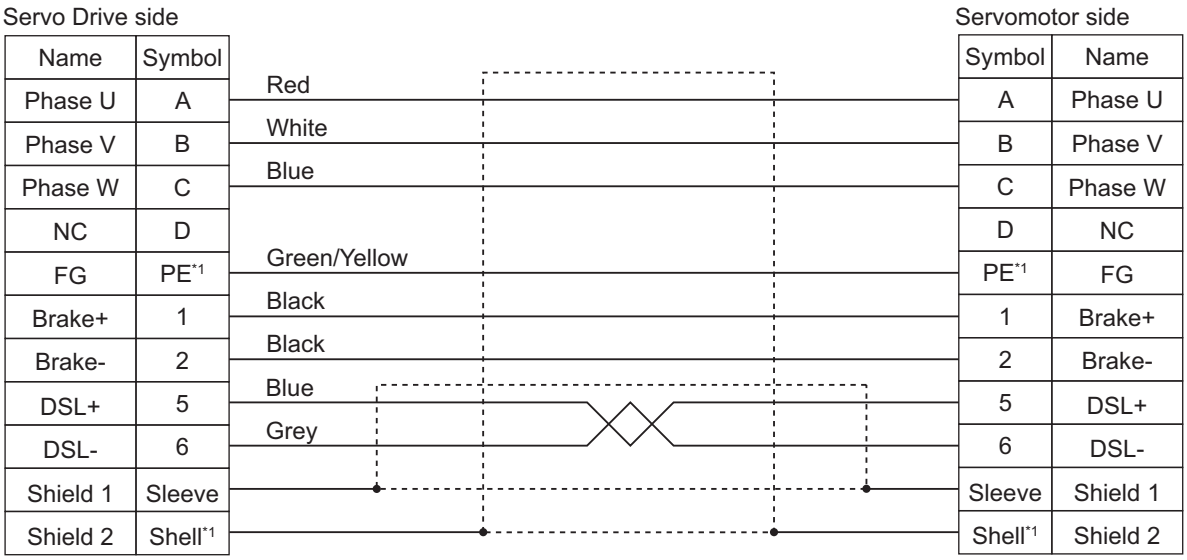

Servo Drive side connector
M23 Series (Phoenix Contact)
Connector model: 1621549
Contact model
Power: 1621579
Brake: 1618256
Encoder (DSL): 1621575

Cable
AWG18×4C UL758
AWG21×2C UL758
AWG22×1P UL758

Motor side Connector
M23 Series (Phoenix Contact)
Connector model: 1621517
Contact model
Power: 1621576
Brake: 1618251
Encoder (DSL): 1621573

*1. PE and shell are set in the connectors at Servo Drive's side and Servomotor's side.

● R88A-CX1DE□□BF

Applicable Servomotors

200 V:

3,000-r/min Servomotors of 2 kW and 2.6 kW

1,500-r/min Servomotors of 2.7 kW

Cable types

Model	Length [L]	Outer diameter of sheath	Minimum bending radius	Weight
R88A-CX1DE10BF	10 m	14.9 mm dia.	149 mm	Approx. 3.5 kg
R88A-CX1DE20BF	20 m			Approx. 6.6 kg

Connection configuration and external dimensions [mm]

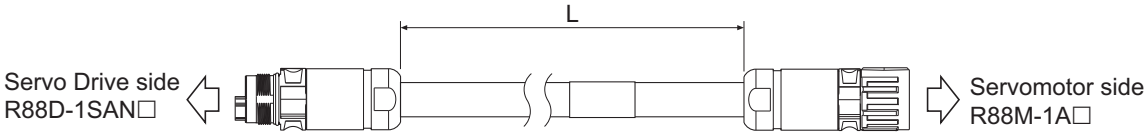

Wiring

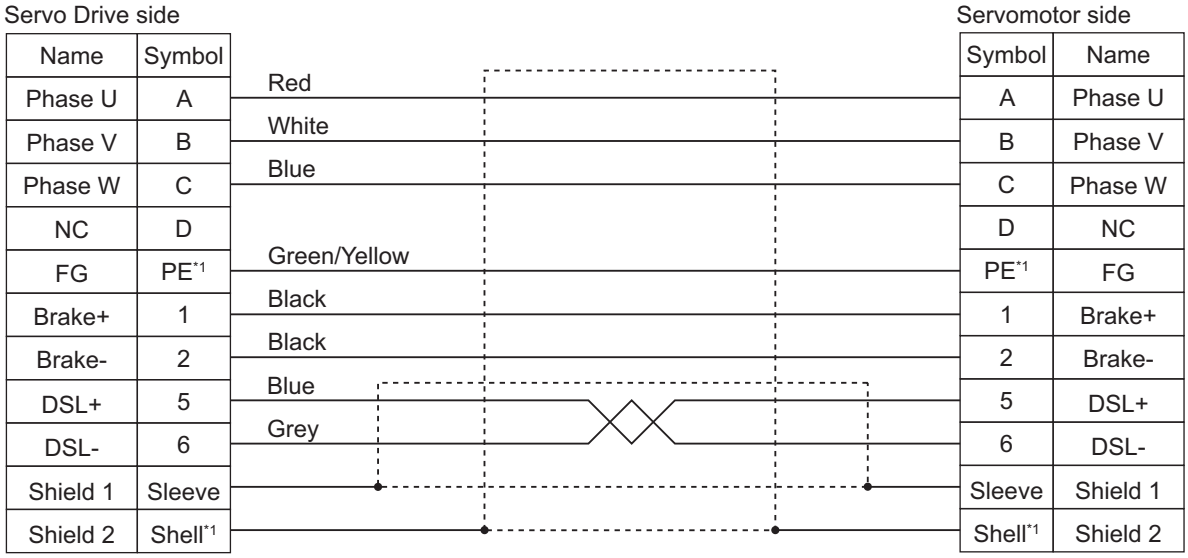

Servo Drive side connector
M23 Series (Phoenix Contact)
Connector model:
1621549
Contact model
Power: 1621580
Brake: 1618256
Encoder (DSL): 1621575

Cable
AWG16×4C UL758
AWG21×2C UL758
AWG22×1P UL758

Motor side Connector
M23 Series (Phoenix Contact)
Connector model:
1621517
Contact model
Power: 1621577
Brake: 1618251
Encoder (DSL): 1621573

*1. PE and shell are set in the connectors at Servo Drive's side and Servomotor's side.

3-4-2 Combination of Integrated Cable and Extension Cable

This section describes specifications for a case when an integrated cable is used with extension cables. When the integrated cable is over 20 m, follow the below list that specifies the combination of integrated cable with extension cable.

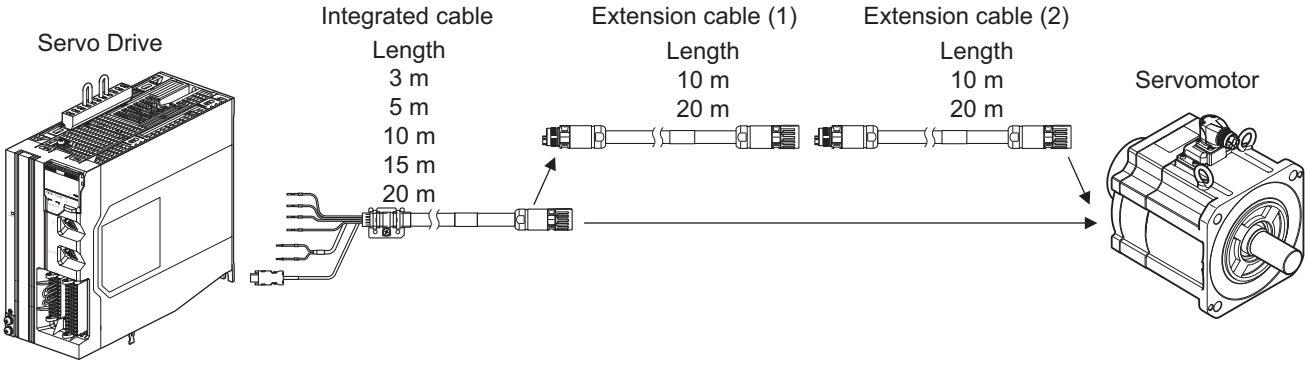

Length (m)				Combination
Total	Integrated cable	Extension cable (1)	Extension cable (2)	
3	3	---	---	Integrated cable
5	5	---	---	Integrated cable
10	10	---	---	Integrated cable
15	15	---	---	Integrated cable
20	20	---	---	Integrated cable
30	20	10	---	Integrated cable + extension cable (1)
40	20	20	---	Integrated cable + extension cable (1)
50	20	10	20	Integrated cable + extension cable (1) + extension cable (2)*1

*1. Extension cable (1); 20 m + Extension cable (2); 10 m can be usable.

3-4-3 Resistance to Bending of Integrated Cable

This section describes the test conditions related to the resistance to bending and the estimated life of a integrated cable.

The flexing life of a cable is estimated under the following conditions.

Precautions for Correct Use

- Because the lifetime data on resistance to bending is intended for reference only, use the cable with a sufficient margin.
- The minimum bending radius refers to the value at which the core conductor provides electrical continuity without causing cracks and scratches that can have functional impact on the sheath, which does not cover the disconnection of shielded wire.
- Equipment damage or grounding fault due to dielectric breakdown may occur if cables are used at a radius smaller than the minimum bending radius.

Moving Bend Test

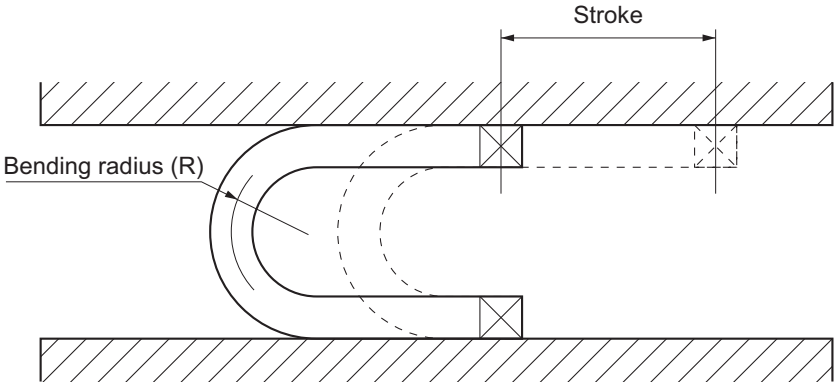

Bend test conditions		Estimated life
Minimum bending radius [R]	Stroke	
10 times as large as the cable sheath outer diameter	500 to 1,000 mm	10 million times

3-4-4 EtherCAT Communications Cable Specifications

For the EtherCAT communications cable, use a twisted-pair cable, which is doubly shielded by the aluminum tape and braid, with Ethernet Category 5 (100BASE-TX) or higher.

Recommended cables are shown below.

Recommended Cable

Size × Number of cable cores (pairs)	Recommended manufacturer	Model
AWG 24 × 4P	Tonichi kyosan Cable, Ltd.	NETSTAR-C5E SAB 0.5 × 4P
	Kuramo Electric Co.	KETH-SB
AWG 22 × 2P	Kuramo Electric Co.	KETH-PSB-OMR*1

*1. We recommend you to use this cable in combination with the OMRON connector (Model: XS6G-T421-1).

Precautions for Correct Use

The maximum cable length between nodes is 100 m. However, some cables are specified for less than 100 m. Generally speaking, if the conductor is twisted wire rather than solid wire, transmission performance will be lower, and reliable communications may not be possible at 100 m. Confirm details with the cable manufacturer.

Additional Information

If an Ethernet cable of Ethernet Category 5 (100BASE-TX) or higher is used, communications will be possible even if the cable is not shielded. However, we recommend a cable, which is doubly shielded by the aluminum tape and braid, to ensure sufficient noise immunity.

Recommended Connector (Modular Plug)

Use a shielded connector of Ethernet Category 5 (100BASE-TX) or higher.

Recommended connectors are shown below.

Size × Number of cable cores (pairs)	Recommended manufacturer	Model
AWG 24 × 4P	Panduit Corporation	MPS588
AWG 22 × 2P	OMRON Corporation	XS6G-T421-1*1

*1. We recommend you to use this connector in combination with the Kuramo Electric Co. KETH-PSB-OMR cable.

Precautions for Correct Use

When you select a connector, confirm that it is applicable to the cable that will be used. Confirm the following items: Conductor size, conductor type (solid wire or twisted wire), number of twisted pairs (2 or 4), outer diameter, etc.

Attaching the Connectors to the Cable

Use straight wiring for the communications cable, as shown below.

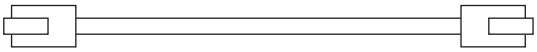

Pin No.	Wire color	Wire color	Pin No.
1	White, green	White, green	1
2	Green	Green	2
3	White, orange	White, orange	3
4	Blue	Blue	4
5	White, blue	White, blue	5
6	Orange	Orange	6
7	White, brown	White, brown	7
8	Brown	Brown	8
Connector hood	Shielded wire	Shielded wire	Connector hood

Note 1. Connect the cable shield to the connector hood at both ends of the cable.

2. There are two connection methods for Ethernet: T568A and T568B. The T568A connection method is shown above, but you can also use the T568B connection method.

Wiring

Wiring Example of Configuring Daisy Chain Topology

This example shows how to connect an NJ/NX-series CPU Unit to Servo Drives by the use of EtherCAT Communications Cables. Connect the NJ/NX-series CPU unit to the ECAT IN connector on the first Servo Drive. Connect the ECAT OUT connector on the first Servo Drive to the ECAT IN connector on the next Servo Drive. Do not connect the ECAT OUT connector on the last Servo Drive.

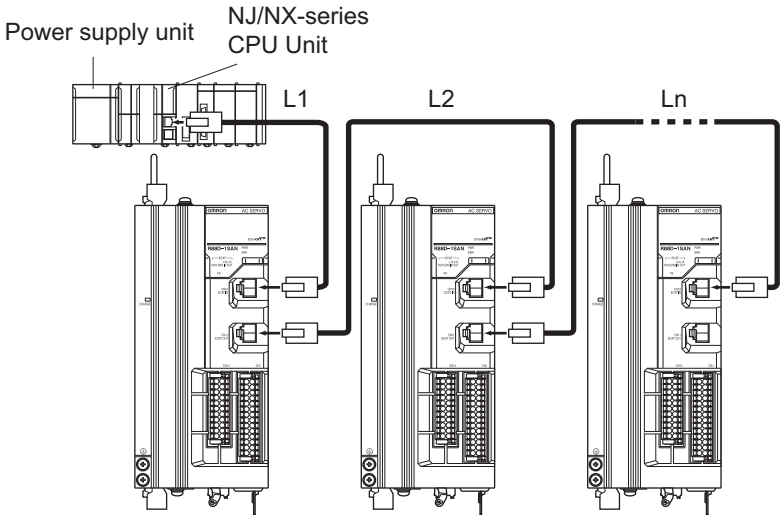

Wiring Example of Configuring Ring Topology

This example shows how to connect an NJ/NX-series CPU Unit to Servo Drives via an OMRON GX-JC03 EtherCAT Junction Slave by the use of EtherCAT Communications Cables. Connect the NJ/NX-series CPU unit to the IN connector on the EtherCAT Junction Slave. Connect the X2 connector (start port of the ring) on the EtherCAT Junction Slave to the ECAT IN connector on the first Servo Drive. Connect the ECAT OUT connector on the first Servo Drive to the ECAT IN connector on the next Servo Drive. Connect the ECAT OUT connector on the last Servo Drive to the X3 connector (end port of the ring) on the EtherCAT Junction Slave.

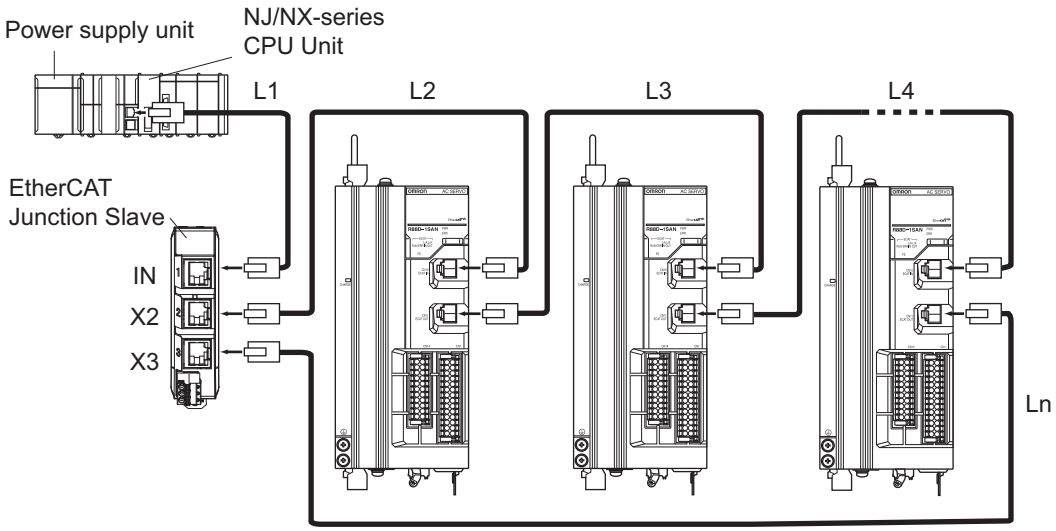

Precautions for Correct Use

- Always turn OFF the power supply to the NJ/NX-series CPU Unit and Servo Drives before you connect or disconnect the EtherCAT Communications Cables.
- The cable between the two nodes (L1, L2 ... Ln) must be 100 m or less.

3-5 Specifications of External Regeneration Resistors and External Regeneration Resistance Units

This section describes the specifications of the External Regeneration Resistor and External Regeneration Resistance Unit.

Refer to *2-4-6 Dimensions of External Regeneration Resistors and External Regeneration Resistance Units* on page 2-55 for external dimensions.

3-5-1 General Specifications

Item	Model	
	R88A-RR120□□/-RR300□□	R88A-RR1K6□□
Dielectric strength	Between terminals and case: 2,000 VAC for 1 min (at 50/60 Hz)	
Insulation resistance	Between terminals and case: 20 MΩ min. (at 500 VDC)	
Operating ambient temperature and humidity	0 to 55°C, 90% max. (with no condensation)	0 to 55°C, 90% max. (with no condensation)
Storage ambient temperature and humidity	-25 to 85°C, 95% max. (with no condensation)	-20 to 65°C, 90% max. (with no condensation)
Operating and storage atmosphere	No corrosive gases	

3-5-2 Characteristics

External Regeneration Resistor

Applicable Servo Drive (R88D-1SAN□□□-ECT)	External Regeneration Resistor						Wire size
	Model	Resistance value	Power to be absorbed for 120ºC temperature rise	Heat radiation specification	Heat radiation condition	Weight	
02H	R88A-RR12025	25 Ω	24 W	Natural cooling	Aluminum 350 mm × 350 mm Thickness: 3.0 mm	0.48 kg	AWG 16 (Rated temperature : 200°C) Length: 500 mm
30H	R88A-RR30008	8 Ω	60 W			1.6 kg	
20H	R88A-RR30010	10 Ω					
15H	R88A-RR30014	14 Ω					
08H, 10H, 20F*1	R88A-RR30020	20 Ω					
02H, 04H	R88A-RR30025	25 Ω					
30F	R88A-RR30032	32 Ω					
10F*1	R88A-RR30033	33 Ω					
15F	R88A-RR30054	54 Ω					

*1. Use two series-connected External Regeneration Resistors for this model.

External Regeneration Resistance Unit

Applicable Servo Drive (R88D-1SAN□□□-ECT)	External Regeneration Resistance Unit					Wire size*1
	Model	Resis-tance value	Power to be absorbed for 120ºC temperature rise	Heat radiation specification	Weight	
30H	R88A-RR1K608	8 Ω	640 W	Forced cooling by the fan	8.0 kg	AWG 10, 4.0 to 5.5 mm^2
20H	R88A-RR1K610	10 Ω				
15H	R88A-RR1K614	14 Ω				AWG 14 to 10, 2.0 to 5.5 mm^2
08H	R88A-RR1K620	20 Ω				AWG 18 to 14, 0.75 to 2.0 mm^2
10H						AWG 16 to 14, 1.3 to 2.0 mm^2
20F*2						AWG 14 to 10, 2.0 to 5.5 mm^2
30F	R88A-RR1K632	32 Ω				
20F	R88A-RR1K640	40 Ω				
15F	R88A-RR1K654	54 Ω				AWG 16 to 10, 1.3 to 5.5 mm^2
10F	R88A-RR1K666	66 Ω				

*1. Use wires with a rated voltage of 600 V or higher.
An example of using heat-resistant polyvinyl chloride insulated wires (HIV) at an ambient temperature of 50°C.

*2. Use two series-connected External Regeneration Resistors for this model.

3-5-3 External Regeneration Resistance Unit Specifications

Terminal Block Specifications

Pin No.	Symbol	Name	Specifications
1	R	Regeneration Resistor connection terminals	External regeneration resistor (640 W)
2	R		
3	⏚	Protective earth (PE)	Ground terminal
4	24V	Fan power supply input	Input voltage: 24 VDC (20.4 to 27.6 V) Input current: 0.27 A
5	0V		
6	/SENS	Fan rotation error signal	Open collector output Input voltage: 27.6 VDC max., Output current: 5 mA max. In the normal state: ON, in the error state (Fan stop): OFF (OPEN)

Terminal block screw: M4, Tightening torque: approx. 1.5 to 1.8 N·m

Terminal Block Wiring Example

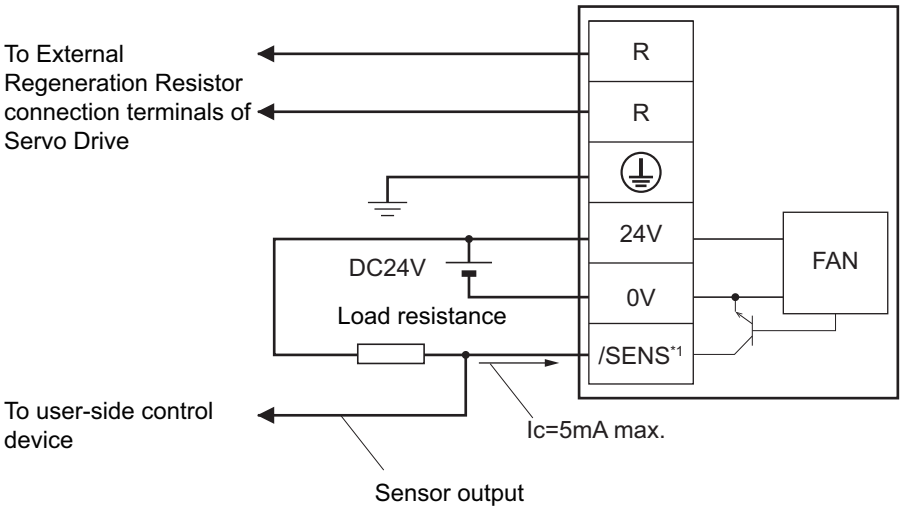

*1. Build a system to prevent the Servomotor from operating if a fan error is detected by the /SENS signal.

/SENS Signal Output Waveform

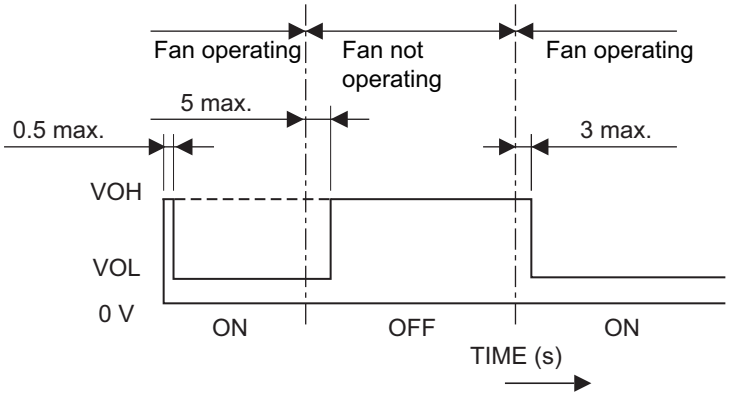

3-6 Reactor Specifications

Connect a Reactor to the Servo Drive for reduction of harmonic current. Select an appropriate Reactor according to the Servo Drive model.

Refer to *2-4-7 Reactor Dimensions* on page 2-56 for dimensions.

3-6-1 General Specifications

Item	Model	
	R88A-PD20□□	R88A-PD40□□
Insulation class	Class H	
Dielectric strength	Between terminals and case: 4,000 VAC for 1 min (at 50/60 Hz)	
Insulation resistance	Between terminals and case: 100 MΩ min. (at 1,000 VDC)	
Operating ambient temperature and humidity	0 to 55°C, 90% max. (with no condensation)	
Storage ambient temperature and humidity	-20 to 65°C, 90% max. (with no condensation)	
Operating and storage atmosphere	No corrosive gases	

3-6-2 Characteristics

Applicable Servo Drive		DC Reactor				Wire size*1
Voltage	Model	Model	Rated current	Inductance (0% to 20%)	Weight	
200 VAC	R88D-1SAN02H-ECT	R88A-PD2002	1.6 A	21.4 mH	1.8 kg	AWG 18 to 14, 0.75 to 2.0 mm^2
	R88D-1SAN04H-ECT	R88A-PD2004	3.2 A	10.7 mH	1.9 kg	AWG 16 to 14, 1.3 to 2.0 mm^2
	R88D-1SAN08H-ECT	R88A-PD2007	6.1 A	6.75 mH	2.0 kg	
	R88D-1SAN10H-ECT	R88A-PD2015	9.3 A	3.51 mH	2.0 kg	
	R88D-1SAN15H-ECT					AWG 12 to 10, 3.3 to 5.5 mm^2
	R88D-1SAN20H-ECT	R88A-PD2022	13.8 A	2.51 mH	2.9 kg	
	R88D-1SAN30H-ECT	R88A-PD2037	22.3 A	1.6 mH	4.4 kg	AWG 10, 4.0 to 5.5 mm^2
400 VAC	R88D-1SAN06F-ECT	R88A-PD4007	3.0 A	27 mH	2.0 kg	AWG 16 to 10, 1.3 to 5.5 mm^2
	R88D-1SAN10F-ECT	R88A-PD4015	4.7 A	14 mH	2.0 kg	
	R88D-1SAN15F-ECT					
	R88D-1SAN20F-ECT	R88A-PD4022	6.9 A	10.1 mH	2.9 kg	AWG 14 to 10, 2.0 to 5.5 mm^2
	R88D-1SAN30F-ECT	R88A-PD4037	11.6 A	6.4 mH	4.5 kg	

*1. Use wires with a rated voltage of 600 V or higher.
An example of using heat-resistant polyvinyl chloride insulated wires (HIV) at the ambient temperature of 50°C.

3-6-3 Terminal Block Specifications

Symbol	Name	Remarks
U	DC Reactor connection terminals	Terminal block screw: M4 Tightening torque: 1.4 to 1.8 N·m
X		

3-7 Noise Filter Specifications

The 1S Servo Drive Advance Type can be connected to the Book-type Noise Filter manufactured by Soshin Electric Co., Ltd. or Cosel Co., Ltd. Select a noise filter in accordance with your system.

Refer to *4-1-5 Noise Filter Installation Conditions* on page 4-13 for details.

For the external dimensions, refer to *2-4-8 Noise Filter Dimensions* on page 2-62.

Selecting an unsuitable noise filter may result in a poor noise reduction effect. Also, a Servo Drive may produce some noise that travels through the power supply cable and causes unintended operation of other Servo Drives such as regeneration operation and Overvoltage Error.

For 1S-series products Advance Type, the Book-type Noise Filters (manufactured by Soshin Electric Co., Ltd.) conform to the EMC Directives. Conformity to the EMC Directives is certified on the conditions that one noise filter is installed for one Servo Drive and an integrated cable connected to one Servo Drive is 20 m or less. For the noise filters, cable lengths, and peripheral equipment that conform to the EMC Directives, refer to *4-3 Wiring Conforming to EMC Directives* on page 4-33.

For a 3-phase 200-V input model of Servo Drive, besides the one conforming to the EMC Directives, you can use the Book-type Noise Filter manufactured by Soshin Electric Co., Ltd. or Cosel Co., Ltd. when an integrated cable connected to one Servo Drive is longer than 20 m.

Also, for the Book-type Noise Filter manufactured by Cosel Co., Ltd., more than one 3-phase 200-V input model of Servo Drive at 1.5 kW or less can be connected to one noise filter. Refer to *4-7 Noise Filter Installation Conditions When the Total Wire Length Is Long* on page 4-51 for details.

3-7-1 General Specifications

Book-type Noise Filters (Manufactured by Soshin Electric Co., Ltd.)

HF2020A-SZC-33DDD/HF3020C-SZC/HF3020C-SZC-33DDD/HF3020C-SZL

Item	Model	
	HF2020A-SZC-33DDD	HF3020C-SZC-33DDD HF3020C-SZ□
Rated Voltage	250 VAC max.	530 VAC max.
Dielectric strength	Between power terminals and PE terminals: 2,250 VDC for 1 min	Between power terminals and PE terminals: 2,830 VDC for 1 min
Insulation resistance	Between power terminals and PE terminals: 500 MΩ min. (at 500 VDC)	
Operating ambient temperature and humidity	-20 to 50ºC (Installed on a metal plate.), 90% max. (with no condensation)	
Storage ambient temperature and humidity	-20 to 60°C, 60% max. (with no condensation)	
Operating and storage atmosphere	No corrosive gases	
UL standards	UL 1283	
EU Directives (Low Voltage Directive)	EN 60939-2	

Consult Soshin Electric Co., Ltd. for details on the specifications.

Book-type Noise Filter (Manufactured by Cosel Co., Ltd.)

FSB-30-254-HU

Item	Model
	FSB-30-254-HU
Rated Voltage	3-phase 250 V (up to 275 V available) 50/60 Hz
Dielectric strength	Between power terminals and PE terminals: 2,800 VDC for 1 min
Insulation resistance	Between power terminals and PE terminals: 100 MΩ min. (at 500 VDC)
Operating ambient temperature and humidity	-40 to 85°C (refer to Derating Characteristics.), 20% to 95% max. (with no condensation)
Storage ambient temperature and humidity	-40 to 85°C, 20% to 95% (with no condensation)
Operating and storage atmosphere	No corrosive gases
UL standards	UL 1283
EU Directives (Low Voltage Directive)	DIN EN 60939

Consult Cosel Co., Ltd. for details on the specifications.

● Derating Characteristics

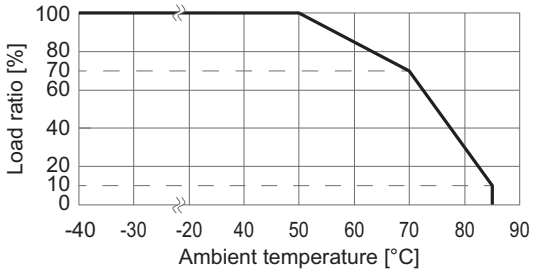

Note Do not block up an air hole for heat radiation in the cabinet.

3-7-2 Characteristics

Book-type Noise Filters (Manufactured by Soshin Electric Co., Ltd.)

Applicable Servo Drive		Noise filter			
Voltage	Model (R88D-)	Model	Rated current	Leakage current	Weight
Single-phase 200 VAC	1SAN□□H-ECT	HF2020A-SZC-33 DDD	20 Arms	8.5 mA max. (at 250 VAC 60 Hz)	1.3 kg
3-phase 200 VAC	1SAN□□H-ECT	HF3020C-SZC-33 DDD	20 Arms	3.5 mA max. (at 400 VAC 50 Hz by UL1283*1), 4.0 mA max. (at 200 VAC 60 Hz, △ connection and single-phase ground)	1.3 kg
	1SAN15H-ECT	HF3020C-SZL*2	20 Arms	7 mA max. (at 400 VAC 50 Hz by UL1283*1), 7.7 mA max. (at 200 VAC 60 Hz, △ connection and single-phase ground)	1.3 kg
	1SAN20H-ECT				
	1SAN30H-ECT				
3-phase 400 VAC	1SAN□□F-ECT	HF3020C-SZC	20 Arms	7 mA max. (at 400 VAC 50 Hz by UL1283*1)	1.3 kg

*1. When you use a neutral grounded 3-phase power supply, the leakage current does not flow normally.

*2. Use a noise filter in a range of the ambient temperature from 0 to 50°C.

Consult Soshin Electric Co., Ltd. for details on the specifications.

Book-type Noise Filter (Manufactured by Cosel Co., Ltd.)

Applicable Servo Drive		Noise filter			
Phase	Model (R88D-)	Model	Rated current	Leakage current	Weight
3-phase 200 VAC	1SAN0□H-ECT	FSB-30-254-HU	30 Arms	12 mA max. (at 250 VAC 60 Hz, △ connection and single-phase ground)	1.8 kg
	1SAN1□H-ECT				

3-7-3 Terminal Block Specifications

Book-type Noise Filters (Manufactured by Soshin Electric Co., Ltd.)

● HF2020A-SZC-33DDD

Symbol	Name	Remarks
1	Input terminal	Screw: M4, Tightening torque: 1.2 N·m
3		
4	Output terminal	
6		
⏚	Ground terminal	Screw: M4, Tightening torque: 1.2 N·m Wire size: 3.5 mm^2 (AWG 12) min.

● HF3020C-SZC/HF3020C-SZC-33DDD/HF3020C-SZL

Symbol	Name	Remarks
1	Input terminal	Screw: M4, Tightening torque: 1.2 N·m
2		
3		
4	Output terminal	
5		
6		
⏚	Ground terminal	Screw: M4, Tightening torque: 1.2 N·m Wire size: 3.5 mm^2 (AWG 12) min.

Book-type Noise Filter (Manufactured by Cosel Co., Ltd.)

● FSB-30-254-HU

Symbol	Name	Remarks
1	Input terminal	Screw: M4, Tightening torque: 1.6 N·m
2		
3		
4	Output terminal	
5		
6		
⏚	Protective earth (PE)	Screw: M4, Tightening torque: 1.6 N·m Wire size: 3.5 mm^2 (AWG 12) min.

4

Configuration and Wiring

This section explains the conditions for installing Servo Drives, Servomotors, and Decelerators, the wiring methods including wiring conforming to EMC Directives, the regenerative energy calculation methods, as well as the performance of External Regeneration Resistors.

4-1 Installation Conditions 4-2

4-1-1 Servo Drive Installation Conditions 4-2

4-1-2 Servomotor Installation Conditions 4-5

4-1-3 Decelerator Installation Conditions 4-9

4-1-4 External Regeneration Resistor and External Regeneration Resistance Unit Conditions 4-13

4-1-5 Noise Filter Installation Conditions 4-13

4-2 Wiring 4-15

4-2-1 Peripheral Equipment Connection Examples 4-16

4-2-2 Procedure for Wiring Connector-type Terminal Blocks and for Mounting a Shield Clamp 4-26

4-2-3 Procedure for Attaching an Integrated Connector 4-29

4-2-4 Procedure for Change of Cable Outlet Direction for Integrated Cable 4-31

4-3 Wiring Conforming to EMC Directives 4-33

4-3-1 Peripheral Equipment Connection Examples 4-34

4-3-2 Selecting Connection Component 4-38

4-4 Regenerative Energy Absorption 4-43

4-4-1 Calculating the Regenerative Energy 4-43

4-4-2 Servo Drive Regeneration Absorption Capacity 4-46

4-4-3 Regenerative Energy Absorption by an External Regeneration Resistance Device 4-47

4-4-4 Connecting an External Regeneration Resistor 4-48

4-5 Adjustment for Large Load Inertia 4-49

4-6 Machine Accuracy for Servomotor 4-50

4-7 Noise Filter Installation Conditions When the Total Wire Length Is Long 4-51

4-7-1 Noise Filters for Integrated Cables That Are Longer Than 20 Meters 4-51

4-7-2 Noise Filter to Connect to More Than One Servo Drive 4-51

4-1 Installation Conditions

This section explains the conditions for installing Servo Drives, Servomotors, Decelerators, and noise filters.

4-1-1 Servo Drive Installation Conditions

Space Conditions around Servo Drives

Install the Servo Drives according to the dimension conditions shown in the following illustration, and ensure proper dispersion of heat from inside the Servo Drive and convection inside the panel. If the Servo Drives are installed side by side, install a fan for air circulation to prevent uneven temperatures inside the panel.

● Single-unit Installation

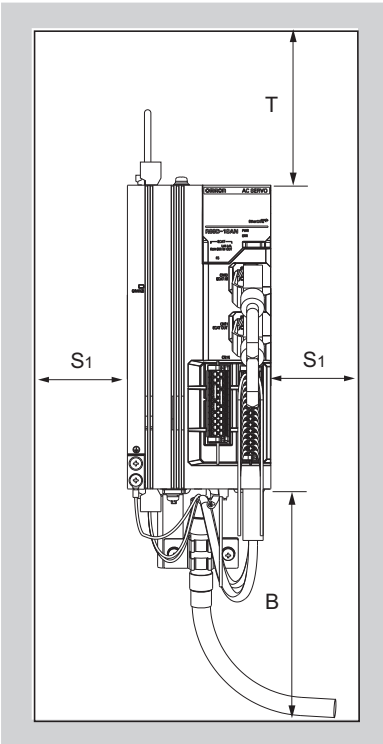

Front view

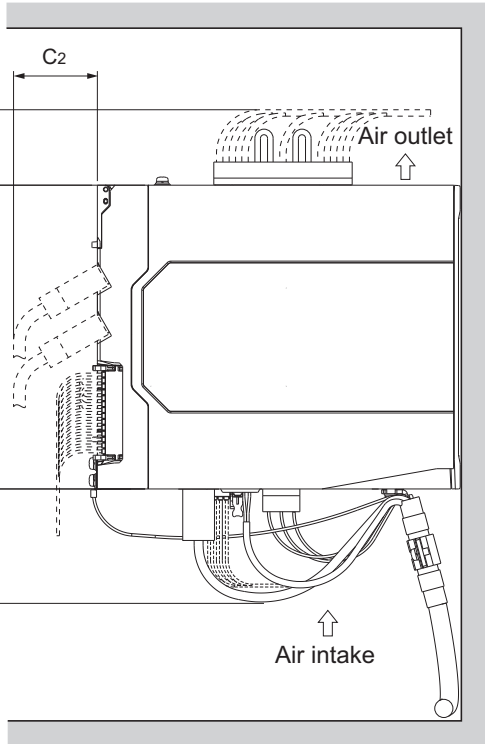

Side view

● Side-by-side Installation

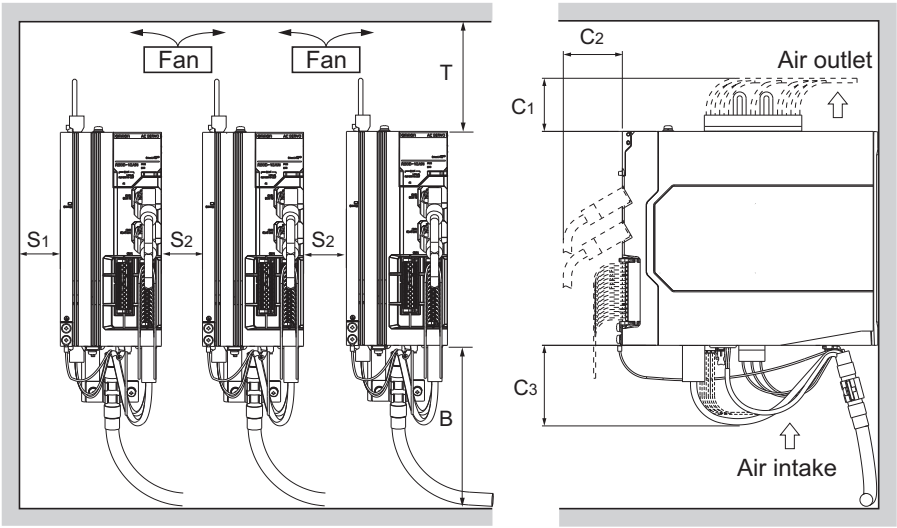

Front view Side view

Dimen-sion	Distance	
T	100 mm min.	
B	R88D-1SAN02H-ECT/-1SAN04H-ECT/-1SAN08H-ECT	150 mm min.
	R88D-1SAN10H-ECT/-1SAN15H-ECT/-1SAN20H-ECT/-1SAN30H-ECT/ -1SAN10F-ECT/-1SAN15F-ECT/-1SAN20F-ECT/-1SAN30F-ECT	180 mm min.
S_1	40 mm min.	
S_2	10 mm min.	
C_1	R88D-1SAN02H-ECT/-1SAN04H-ECT/-1SAN08H-ECT/-1SAN10H-ECT	45 mm min.
	R88D-1SAN15H-ECT/-1SAN20H-ECT/-1SAN30H-ECT/-1SAN10F-ECT/ -1SAN15F-ECT/-1SAN20F-ECT/-1SAN30F-ECT	60 mm min.
C_2	50 mm min.	
C_3	80 mm min.	

- Install the Servo Drive on the vertical metal surface.
- To provide electrical conduction, remove any paint from the surface on which you install the Servo Drives. Also, it is recommended that you apply conductive plating if you make the mounting bracket by yourself.
- The recommended tightening torque for installing the Servo Drive is 1.5 N·m. Make sure that the threaded portion has the sufficient strength to withstand the recommended torque.
- You can install Servo Drives without the clearance of S2 if the operating ambient temperature is from 0 to 45°C.
- When mounting the shield clamp, use the threads included in the Servo Drive or specified standard threads.
- Before installing the Servo Drive on the control panel, mount the shield clamp to the Servo Drive. Then connect the cable and fix the cable to the shield clamp.
- When you connect PC to the USB connector of the Servo Drive, separate the USB cable from other cables such as the main circuit power supply cable.

Mounting Direction

Turn the bottom of Servo Drive in the gravity direction.

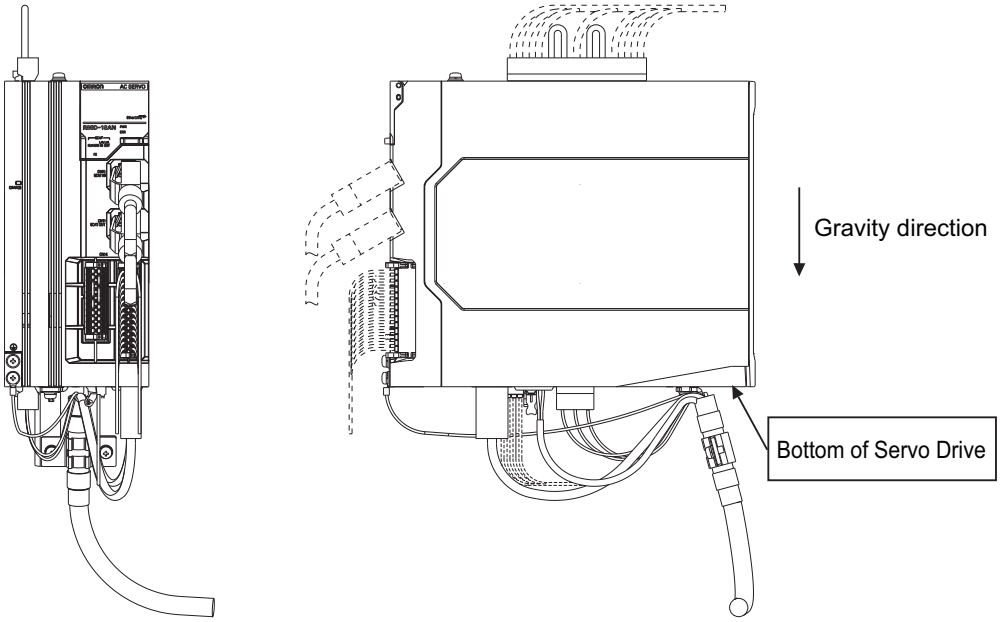

Front view

Side view

Operating Environment Conditions

The environment in which the Servo Drive is operated must meet the following conditions. The Servo Drive may malfunction if it is operated under any other conditions.

Item	Specifications
Operating ambient temperature	0 to 55°C
Operating ambient humidity	90% max. (with no condensation)
Operating atmosphere	No corrosive gases
Operating altitude	1,000 m max.

Ambient Temperature Control

- Operation in an environment in which there is minimal temperature rise is recommended to maintain a high level of reliability.
- When the Servo Drives are installed in a closed space, such as a box, the ambient temperature may rise due to the heat that is generated from each unit. Use a fan or air conditioner to maintain ambient temperature of the Servo Drive under the operating environment conditions.
- The Servo Drive surface may rise in temperature of 30°C above the ambient temperature. Use heat-resistant materials for wiring, and provide a distance from any devices or wiring that are sensitive to heat.
- The use of the Servo Drive in a hot environment shortens its lifetime.
  When you use the Servo Drive in continuous operation, use a fan or air conditioner to maintain the ambient temperature at or below 40°C.

Keeping Foreign Objects Out of Units

- Take measures during installation and operation to keep foreign objects such as metal particles, oil, machining oil, dust, or water out of the Servo Drive.
- Place a cover over the Servo Drive or take other preventative measures to keep foreign objects, such as drill filings, out of the Servo Drive during installation. Be sure to remove the cover after installation is complete. If the cover is left on during operation, heat dissipation from the Servo Drive is blocked, which may result in malfunction.

4-1-2 Servomotor Installation Conditions

Operating Environment Conditions

- The environment in which the Servomotor is operated must meet the following conditions. Operating the Servomotor outside of the following ranges may result in malfunction of the Servomotor.

  Operating temperature: 0 to 40°C (The temperature at a point 50 mm from the Servomotor)

  Operating humidity: 20% to 90% max. (with no condensation)

  Operating ambient atmosphere: No corrosive gases.

Impact and Load

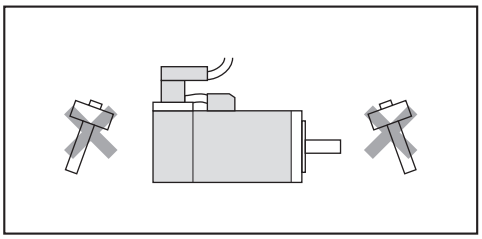

- The Servomotor is resistant to vibration of up to 49 m/s^2.
- If the Servomotor is mounted on a thin plate, the rigidity may decrease and severe vibration may occur.
- The Servomotor is resistant to impacts of up to 98 m/s^2. Do not apply heavy impacts or loads during transport, installation, or removal of the Servomotor.
- When transporting the Servomotor hold the motor body itself. And do not hold the encoder, cable, or connector areas. Failure to follow this guideline may result in damaging the Servomotor.
- Always use a pulley remover to remove pulleys, couplings, or other parts from the shaft.
- Connect cables and connectors carefully so that they are not strained. After assembly, secure cables so that there is no impact or load placed on the cable outlet.
- As a magnetic sensor is used for the encoder of the Servomotor, do not apply external magnetic force on the Servomotor.

Connecting to Mechanical Systems

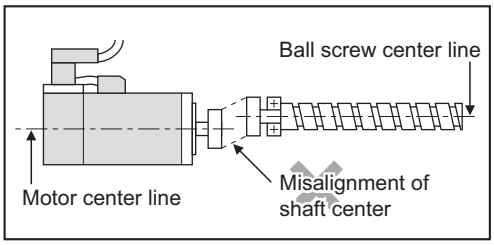

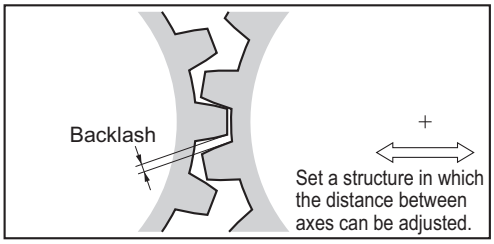

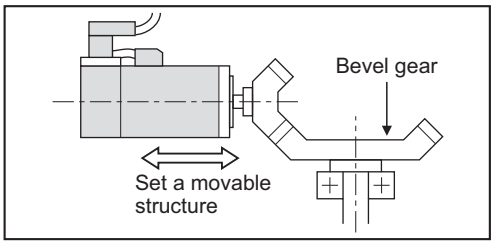

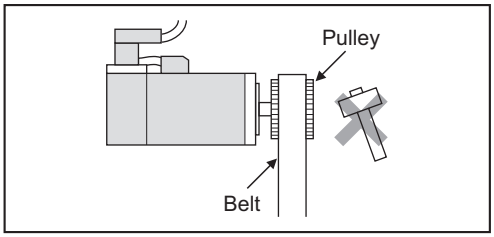

- For the allowable axial loads for Servomotors, refer to *3-2-3 Characteristics* on page 3-33. If an axial load greater than that specified is applied to a Servomotor, it may reduce the limit of the motor bearings and may break the motor shaft.
- When you connect the Servomotor to a load, use couplings that can sufficiently absorb mechanical eccentricity and declination.
- When you connect or disconnect loads (or couplings) to or from the Servomotor, be careful not to apply an impact on the motor shaft. Do not allow the thrust load and radial load to exceed the values that are specified in the manual or catalog while you connect a load to the Servomotor.
- If an abnormal noise is generated from couplings, adjust the shaft center again to eliminate the noise.
- When you align the shaft center of the couplings, turn both the Servomotor side shaft and equipment side shaft.
- For spur gears, an extremely large radial load may be applied depending on the gear precision. Use spur gears with a high degree of precision (for example, JIS class 2: normal line pitch error of 6 μm max. for a pitch circle diameter of 50 mm).
- If the gear precision is not adequate, allow backlash to ensure that no radial load is placed on the motor shaft.
- When you use bevel gears, a load is applied in the thrust direction depending on the assembly precision, the gear precision, and temperature changes. Provide appropriate backlash or take other measures to ensure that a thrust load larger than the specified level is not applied.
- Do not put rubber packing on the flange surface. If the flange is mounted with rubber packing, the Servomotor flange may crack under the tightening force.
- When you connect the Servomotor to a V-belt or timing belt, consult the manufacturer for belt selection and tension.
- A radial load twice as large as the belt tension will be placed on the motor shaft. Do not allow a load that exceeds the allowable radial load to be placed on the motor shaft. If an excessive radial load is applied, the motor shaft and bearings may be damaged.

  Set up a movable pulley in the middle of the motor shaft and the load shaft so that the belt tension can be adjusted.

  Install the Servo Drive so that its bottom faces the gravity direction.

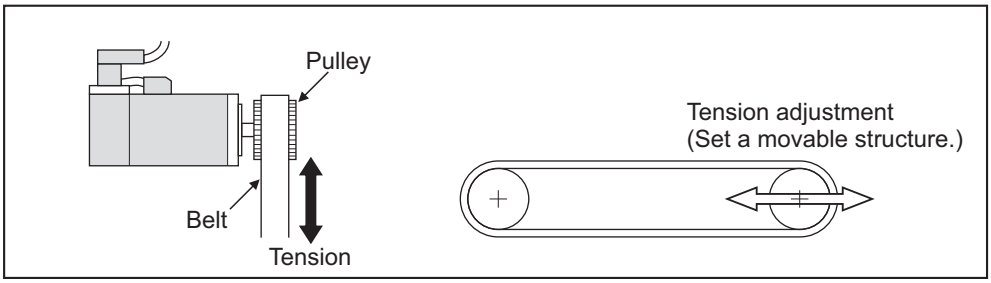

- The cable outlet direction can be changed. The change of it shall be up to five times. For a procedure of the change, refer to *4-2-4 Procedure for Change of Cable Outlet Direction for Integrated Cable* on page 4-31.

Water and Drip Resistance

The protective structure rating of the Servomotor is IP67, except for the through-shaft part and connector pins.

Oil-water Measures

Use the Servomotor with an oil seal if you use it in an environment where oil drops can adhere to the through-shaft part. The operating conditions of the Servomotor with an oil seal are as follows:

- Keep the oil level below the lip of the oil seal.
- Prepare a good lubricated condition under which only oil droplets splash on the oil seal.
- If you use the Servomotor with the shaft in upward direction, make sure that no oil accumulates on the lip of the oil seal.

Radiator Plate Installation Conditions

When you mount a Servomotor onto a small device, be sure to provide enough radiation space on the mounting area because the heat is radiated from the mounting surface. Otherwise the Servomotor temperature may rise too high. One of the preventive measures is to install a radiator plate between the motor attachment area and the motor flange. (See the following figure)
Failure to follow this guideline may result in damaging the Servomotor due to a temperature rise.
Refer to *3-2 Servomotor Specifications* on page 3-31 for the radiator plate specifications.

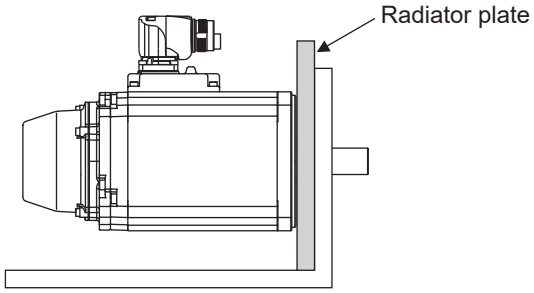

- The temperature rise depends on the mounting part materials and the installation environment. Check the actual temperature rise by using a real Servomotor.
- Depending on the environment, such as when the Servomotor is installed near a heating element, the Servomotor temperature may rise significantly. In this case, take any of the following measures.
  a) Lower the load ratio.
  b) Review the heat radiation conditions of the Servomotor.
  c) Install a cooling fan and apply forced air cooling to the Servomotor.

Other Precautions

Take measures to protect the motor shaft from corrosion. The motor shaft is coated with anti-corrosion oil when it is shipped, but you should remove anti-corrosion oil when you connect the components that apply load to the shaft.

Wire cables not to contact with Servomotors, which have high temperature.

Caution

Do not apply a commercial power supply directly to the motor.
Fire may result.

Do not repair the Servo Drive by disassembling it.
Electric shock or injury may result.

4-1-3 Decelerator Installation Conditions

Installing the R88G-HPG□□□ (3 Arcminutes Type)

Follow the instructions bellow for installing this Decelerator and the Servomotor.

1 Turn the input joint and align the head of the bolt that secures the shaft with the rubber cap.

2 Apply the sealant on the side which the Servomotor is installed. (Recommended sealant: Loctite 515)

3 Gently insert the Servomotor into the Decelerator.

Put up the decelerator vertically and slide the Servomotor into the input shaft joint while using the motor shaft as guide not to fall over, as shown in the figures on the next page. When the Decelerator cannot be put up vertically, tighten each bolt evenly little by little to ensure that the Servomotor is not inserted at a tilt.

4 Fix the Servomotor and the flange of the Decelerator with bolts.

Bolt tightening torque (for aluminum)

Allen head bolt size	M4	M5	M8	M12
Tightening torque [N·m]	3.2	6.3	26.1	89.9

5 Tighten the bolts of the input joint.

Bolt tightening torque (for duralumin)

Allen head bolt size	M4	M6	M8
Tightening torque [N·m]	4.5	15.3	37.2

Note Tighten the bolts to the torque indicated on the above table. A problem such as slipping may occur if the specified torque level is not satisfied.

6 Mount the supplied rubber cap to complete the installation.

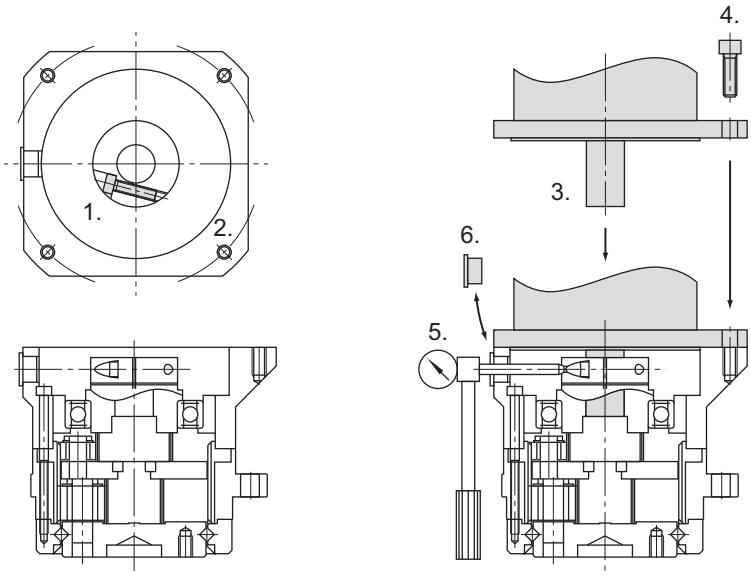

● Installing Decelerator into the Machine

When you install the R88G-HPG□□□ into the machine, confirm that the mounting surface is flat and there are no burrs on the tap sections, and fix the mounting flange with bolts.

Bolt tightening torque on the mounting flange (for aluminum)

R88G-HPG	14A	20A	32A	50A	65A
Number of bolts	4	4	4	4	4
Size of bolts	M5	M8	M10	M12	M16
Mounting PCD [mm]	70	105	135	190	260
Tightening torque [N·m]	6.3	26.1	51.5	103	255

Installing the R88G-VRXF□□□ (15 Arcminutes Type)

Follow the instructions bellow for installing this Decelerator and the Servomotor.

1 Turn the input joint and align the head of the bolt that secures the shaft with the rubber cap.

Check that the set bolt is loose.

2 Gently insert the Servomotor into the Decelerator.

Put up the decelerator vertically and slide the Servomotor into the input shaft joint while using the motor shaft as guide not to fall over, as shown in the figures on the next page. When the Decelerator cannot be put up vertically, tighten each bolt evenly little by little to ensure that the Servomotor is not inserted at a tilt.

3 Fix the Servomotor and the flange of the Decelerator with bolts.

Bolt tightening torque

Allen head bolt size	M4	M5
Tightening torque [N·m]	2.5	5.1

4 Tighten the bolts of the input joint.

Bolt tightening torque (for duralumin)

Allen head bolt size	M4	M5	M6
Tightening torque [N·m]	4.3	8.7	15

Note Tighten the bolts to the torque indicated on the above table. A problem such as slipping may occur if the specified torque level is not satisfied.

5 Mount the supplied rubber cap to complete the installation.

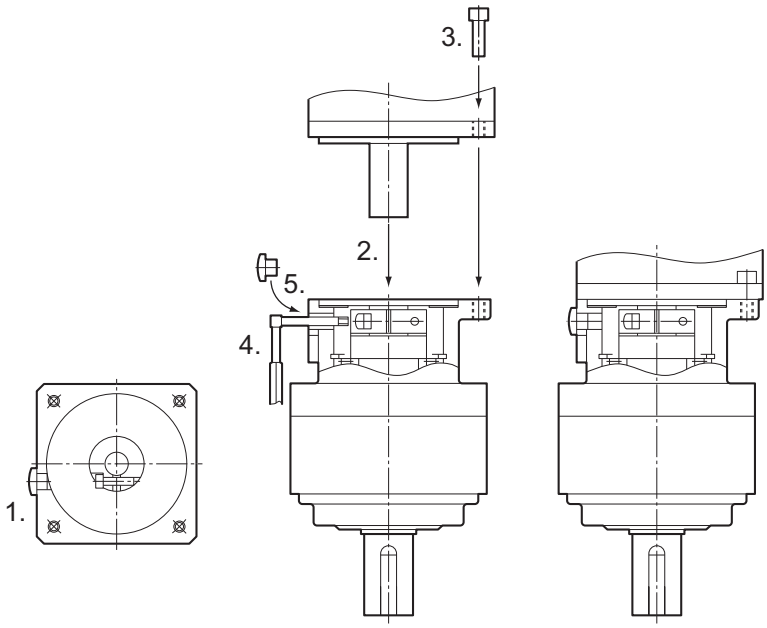

● Installing Decelerator into the Machine

When you install the R88G-VRXF□□□ into the machine, confirm that the mounting surface is flat and there are no burrs on the tap sections, and fix the mounting flange with bolts.

Bolt tightening torque on the mounting flange (for aluminum)

R88G-VRXF	B	C	D
Number of bolts	4	4	4
Size of bolts	M5	M6	M8
Mounting PCD [mm]	60	90	115
Tightening torque [N·m]	5.8	9.8	19.6

Using a Non-OMRON Decelerator (Reference)

If you use a non-OMRON decelerator together with a 1S-series Servomotor Advance Type due to system configuration requirement, select the Decelerator so that the loads on the motor shaft i.e., both the radial and thrust loads are within the allowable ranges. For the allowable axial loads for Servomotors, refer to *3-2-3 Characteristics* on page 3-33.

Also, select the Decelerator so that the allowable input rotation speed and allowable input torque of the decelerator are not exceeded.

4-1-4 External Regeneration Resistor and External Regeneration Resistance Unit Conditions

General Installation Conditions

Obey the following conditions when installing.

- Clearance with peripheral equipment: 50 mm min.
- Wire length: 3 m max.

External Regeneration Resistance Unit Installation Conditions

Obey the following conditions along with the general installation conditions when installing.

- Installation Direction: Install the terminal block side of the unit in the gravity direction (downward).

4-1-5 Noise Filter Installation Conditions

This section describes how to select, wire, and install a noise filter.

Selecting a Noise Filter

If a noise filter needs conforming to the EMC Directives, use the one whose conformity to the EMC Directives has been confirmed by 1S-series Servo Drives Advance Type. For the noise filters that conform to the EMC Directives, refer to *4-3 Wiring Conforming to EMC Directives* on page 4-33.

Select it according to the size of your control panel, Servo Drive model, and amount of the leakage current from the noise filter. For wiring conforming to the EMC Directives described in this manual, it is necessary that an integrated cable connected to one Servo Drive be 20 m or less and one Servo Drive be connected to one noise filter.

For a 3-phase 200-V input model of Servo Drive, besides the one conforming to the EMC Directives, you can use the Book-type Noise Filter manufactured by Soshin Electric Co., Ltd. or Cosel Co., Ltd. when an integrated cable connected to one Servo Drive is longer than 20 m. Also, for the Book-type Noise Filter manufactured by Cosel Co., Ltd., more than one 3-phase 200-V input model of Servo Drive at 1.5 kW or less can be connected to one noise filter. In these cases, refer to *4-7 Noise Filter Installation Conditions When the Total Wire Length Is Long* on page 4-51.

Wiring a Noise Filter

- Refer to *Terminal Block Wire Sizes* on page 3-11 for applicable wire sizes.
- When you use a noise filter, be sure to install a surge absorber on the power supply input (LINE) side.
- If the molded case circuit breaker is located in an upper area and the power supply is wired through the duct at the bottom, keep a sufficient distance between the input wires and internal wires, or use the metal tubing for wiring. If input and output cables are placed in the same duct, the noise immunity will be impaired.
- Place the noise filter as close as possible to the opening of the control panel. Use the diagram below to the left for wiring.

OK Separate I/O

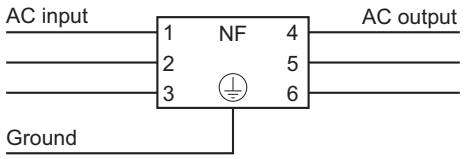

NG Noise filter less effective

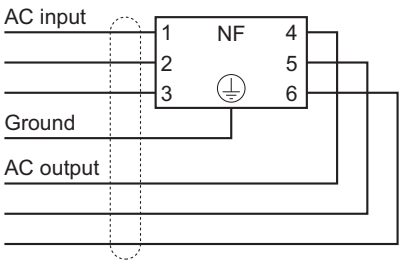

- The power cables must be twisted or tightly bundled.

OK Twist

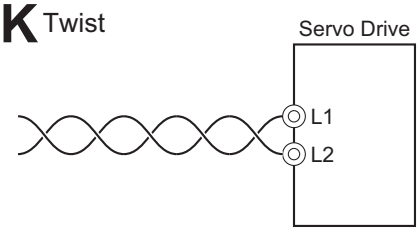

OK Tight bundle

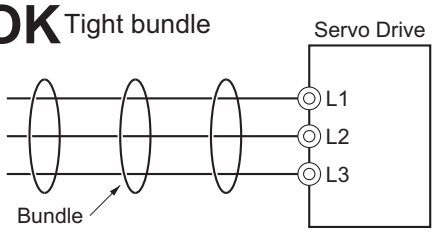

- Wire the power and signal lines separately.
- Refer to *Wiring a Noise Filter to Connect to More Than One Servo Drive* on page 4-55 when you connect more than one Servo Drive to one noise filter.

Installing a Noise Filter

● Book-type Noise Filters (Manufactured by Soshin Electric Co., Ltd.)

The following table shows the installation conditions of noise filters.

Noise filter model	Screw size	Tightening torque	Remarks
HF2020A-SZC-33DDD/HF3020C-SZC/ HF3020C-SZC-33DDD/HF3020C-SZL	M4	1.2 N·m	• Do not block up a hole for heat radiation in the cabinet. • Do not install it to the ceiling surface of the control panel. • Clearance with peripheral equipment: 50 mm min.

● Book-type Noise Filter (Manufactured by Cosel Co., Ltd.)

The following table shows the installation conditions of noise filters.

Noise filter model	Screw size	Tightening torque	Remarks
FSB-30-254-HU	M5	2.4 N·m	• Do not block up a hole for heat radiation in the cabinet. • Do not install it to the ceiling surface of the control panel. • Clearance with peripheral equipment: 50 mm min.

4-2 Wiring

This section gives the examples of connection with peripheral equipment and wirig such as connection of the main circuit and Servomotor.

4-2-1 Peripheral Equipment Connection Examples

R88D-1SAN02H-ECT/-1SAN04H-ECT/-1SAN08H-ECT (Single-phase Input)

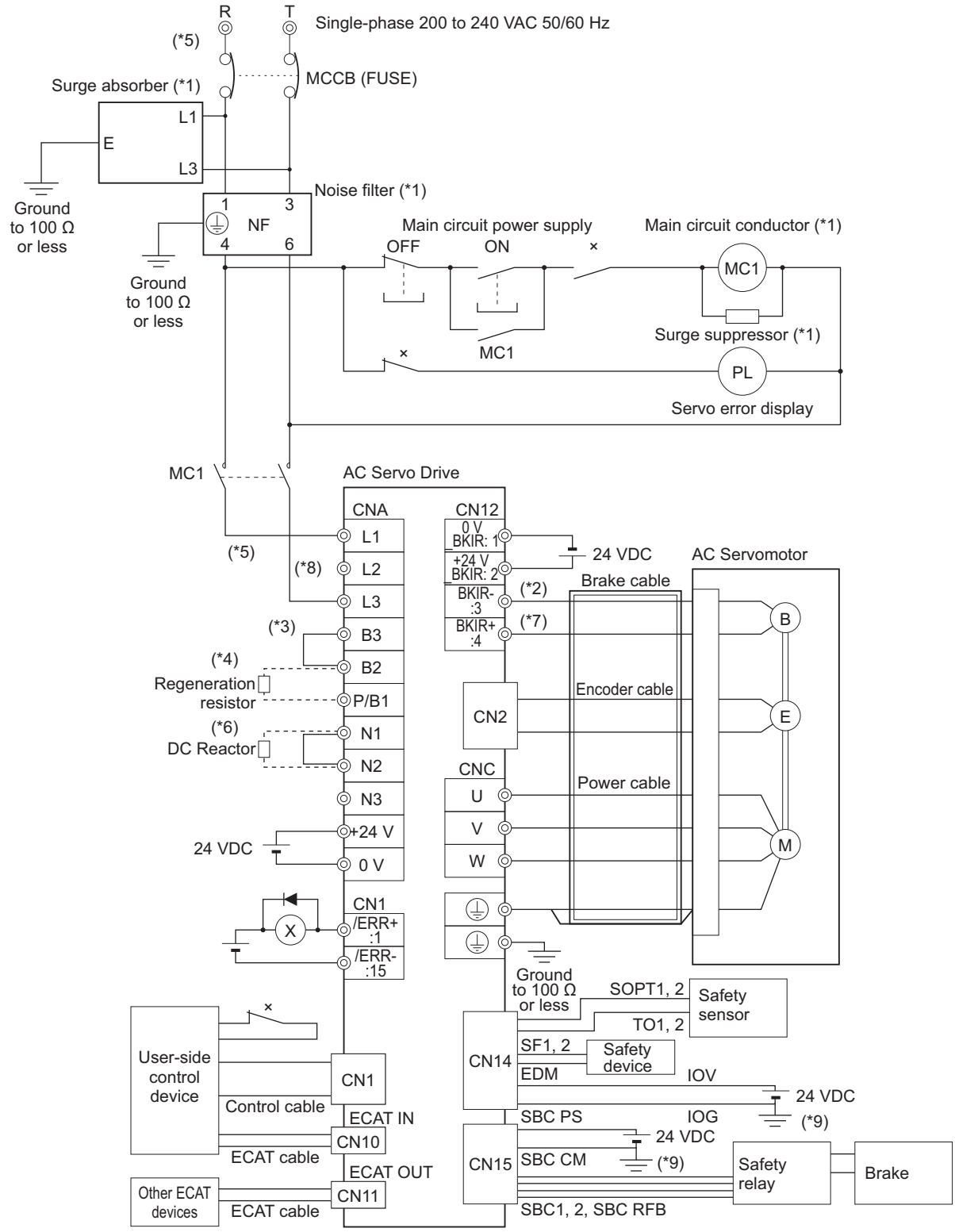

*1. Use one noise filter for each Servo Drive. Selecting an unsuitable noise filter may result in a poor noise reduction effect. Also, a Servo Drive may produce some noise that travels through the power supply cable and causes unintended operation of other Servo Drives such as regeneration operation and Overvoltage Error.
When you use a noise filter, install a surge absorber on the LINE side of the noise filter.
Recommended noise filters and surge absorbers are listed in *4-3 Wiring Conforming to EMC Directives* on page 4-33.

*2. There is no polarity on the brakes.

*3. Short-circuit B2 and B3 for models with a built-in regeneration resistor (1SAN08H-ECT). When the amount of regeneration is large, remove the short-circuit wire between B2 and B3 and connect a regeneration resistor between B1 and B2.

*4. There is no Internal Regeneration Resistor for 1SAN02H-ECT and 1SAN04H-ECT. When the amount of regeneration is large, connect the necessary regeneration resistor between B1 and B2.

*5. To ensure safety, install a leakage breaker for the main circuit power supply input in the control panel. Refer to *4-3-2 Selecting Connection Component* on page 4-38.

*6. When the DC reactor is not used, short-circuit N1 and N2.
When the DC reactor is used, remove the short-circuit wire between N1 and N2, and connect the DC reactor between N1 and N2.

*7. External connection components are not required because a brake relay and a surge absorbing element are built into the Servo Drive.

*8. Connect the main circuit power supply input to L1-L2, L2-L3, or L3-L1.

*9. Ground 0V (IOG, SBC CM) of the power supply to detect a disconnection during input/output wiring and an error during ground fault.

Note When you connect PC to the USB connector of the Servo Drive, separate the USB cable from other cables such as the main circuit power supply cable.

WARNING

Design the configuration to cut off the main circuit power supply when the ERR signal (normally close contact) of the control output function is output (open).
Not doing so may cause a fire.

R88D-1SAN02H-ECT/-1SAN04H-ECT/-1SAN08H-ECT/-1SAN10H-ECT (3-phase Input)

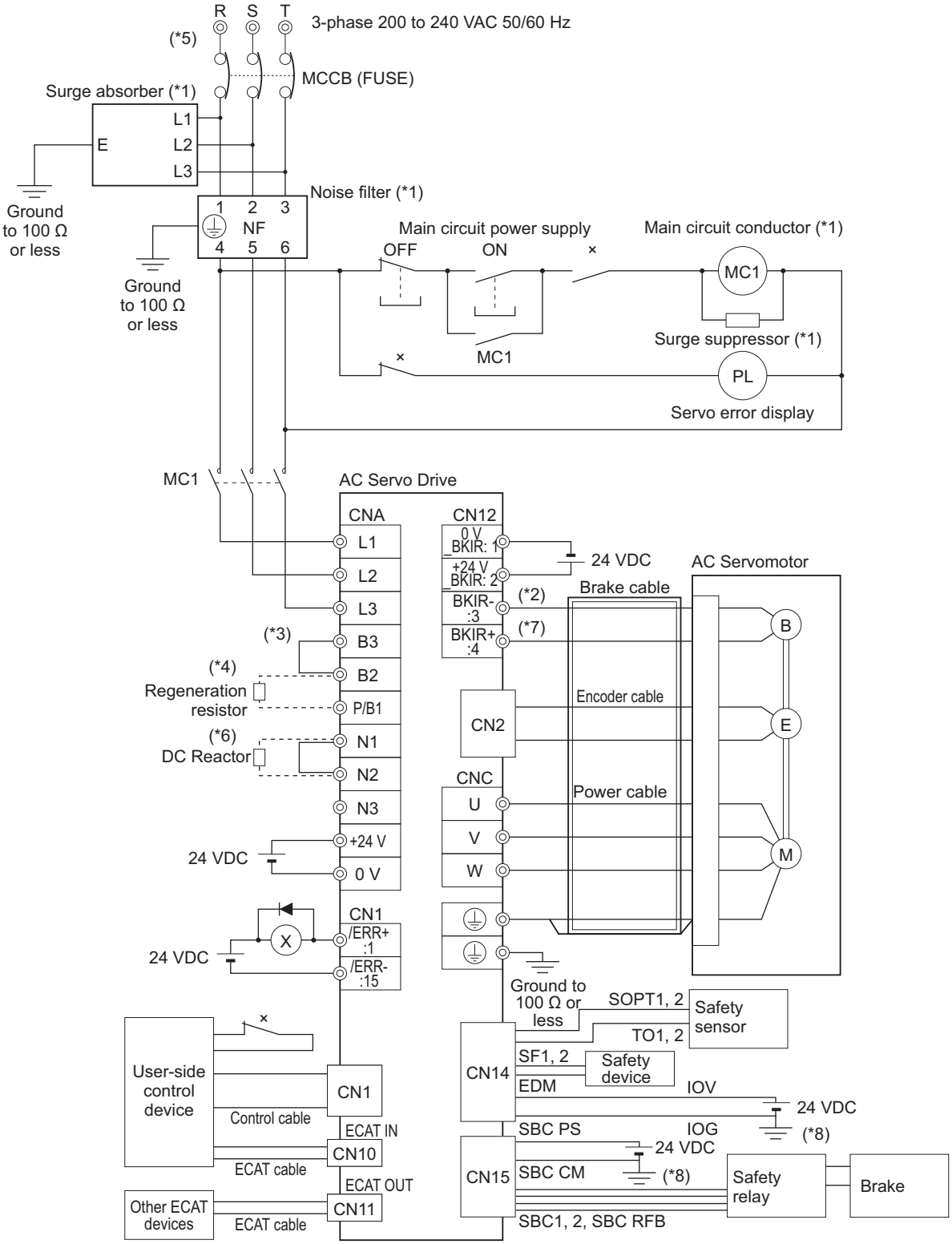

*1. You can connect more than one Servo Drive to one noise filter when you use the Servo Drives of 02H to 15H (200 to 240 VAC) with 3-phase input. Refer to *4-7 Noise Filter Installation Conditions When the Total Wire Length Is Long* on page 4-51. Selecting an unsuitable noise filter may result in a poor noise reduction effect. Also, a Servo Drive may produce some noise that travels through the power supply cable and causes unintended operation of other Servo Drives such as regeneration operation and Overvoltage Error.
When you use a noise filter, install a surge absorber on the LINE side of the noise filter.
Recommended noise filters and surge absorbers are listed in *4-3 Wiring Conforming to EMC Directives* on page 4-33.

*2. There is no polarity on the brakes.

*3. Short-circuit B2 and B3 for models with a built-in regeneration resistor (1SAN08H-ECT and 1SAN10H-ECT). When the amount of regeneration is large, remove the short-circuit wire between B2 and B3 and connect a regeneration resistor between B1 and B2.

*4. There is no Internal Regeneration Resistor for 1SAN02H-ECT and 1SAN04H-ECT. When the amount of regeneration is large, connect the necessary Regeneration Resistor between B1 and B2.

*5. To ensure safety, install a leakage breaker for the main circuit power supply input in the control panel. Refer to *4-3-2 Selecting Connection Component* on page 4-38.

*6. When the DC reactor is not used, short-circuit N1 and N2.
When the DC reactor is used, remove the short-circuit wire between N1 and N2, and connect the DC reactor between N1 and N2.

*7. External connection components are not required because a brake relay and a surge absorbing element are built into the Servo Drive.

*8. Ground 0V (IOG, SBC CM) of the power supply to detect a disconnection during input/output wiring and an error during ground fault.

Note When you connect PC to the USB connector of the Servo Drive, separate the USB cable from other cables such as the main circuit power supply cable.

WARNING

Design the configuration to cut off the main circuit power supply when the ERR signal (normally close contact) of the control output function is output (open).
Not doing so may cause a fire.

R88D-1SAN15H-ECT (Single-phase Input)

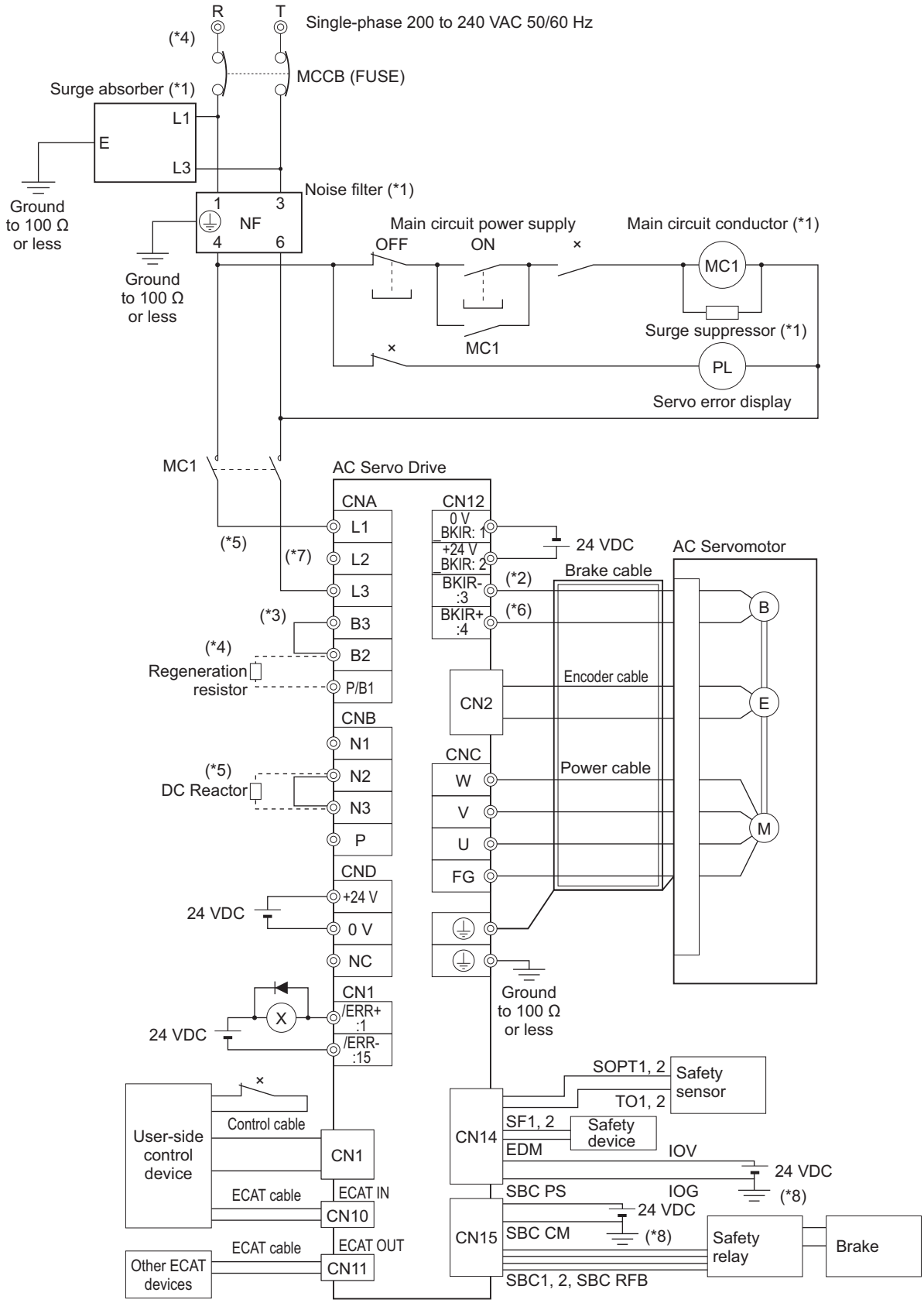

*1. Use one noise filter for each Servo Drive. Selecting an unsuitable noise filter may result in a poor noise reduction effect. Also, a Servo Drive may produce some noise that travels through the power supply cable and causes unintended operation of other Servo Drives such as regeneration operation and Overvoltage Error.
When you use a noise filter, install a surge absorber on the LINE side of the noise filter.
Recommended noise filters and surge absorbers are listed in *4-3 Wiring Conforming to EMC Directives* on page 4-33.

*2. There is no polarity on the brakes.

*3. Short-circuit B2 and B3 for models with a built-in regeneration resistor (1SAN15H-ECT). When the amount of regeneration is large, remove the short-circuit wire between B2 and B3 and connect a regeneration resistor between B1 and B2.

*4. To ensure safety, install a leakage breaker for the main circuit power supply input in the control panel.Refer to *4-3-2 Selecting Connection Component* on page 4-38.

*5. When the DC reactor is not used, short-circuit N1 and N2.
When the DC reactor is used, remove the short-circuit wire between N1 and N2, and connect the DC reactor between N1 and N2.

*6. External connection components are not required because a brake relay and a surge absorbing element are built into the Servo Drive.

*7. Connect the main circuit power supply input to L1-L2, L2-L3, or L3-L1.

*8. Ground 0V (IOG, SBC CM) of the power supply to detect a disconnection during input/output wiring and an error during ground fault.

Note When you connect PC to the USB connector of the Servo Drive, separate the USB cable from other cables such as the main circuit power supply cable.

WARNING

Design the configuration to cut off the main circuit power supply when the ERR signal (normally close contact) of the control output function is output (open).
Not doing so may cause a fire.

R88D-1SAN15H-ECT/-1SAN20H-ECT/-1SAN30H-ECT (3-phase input)

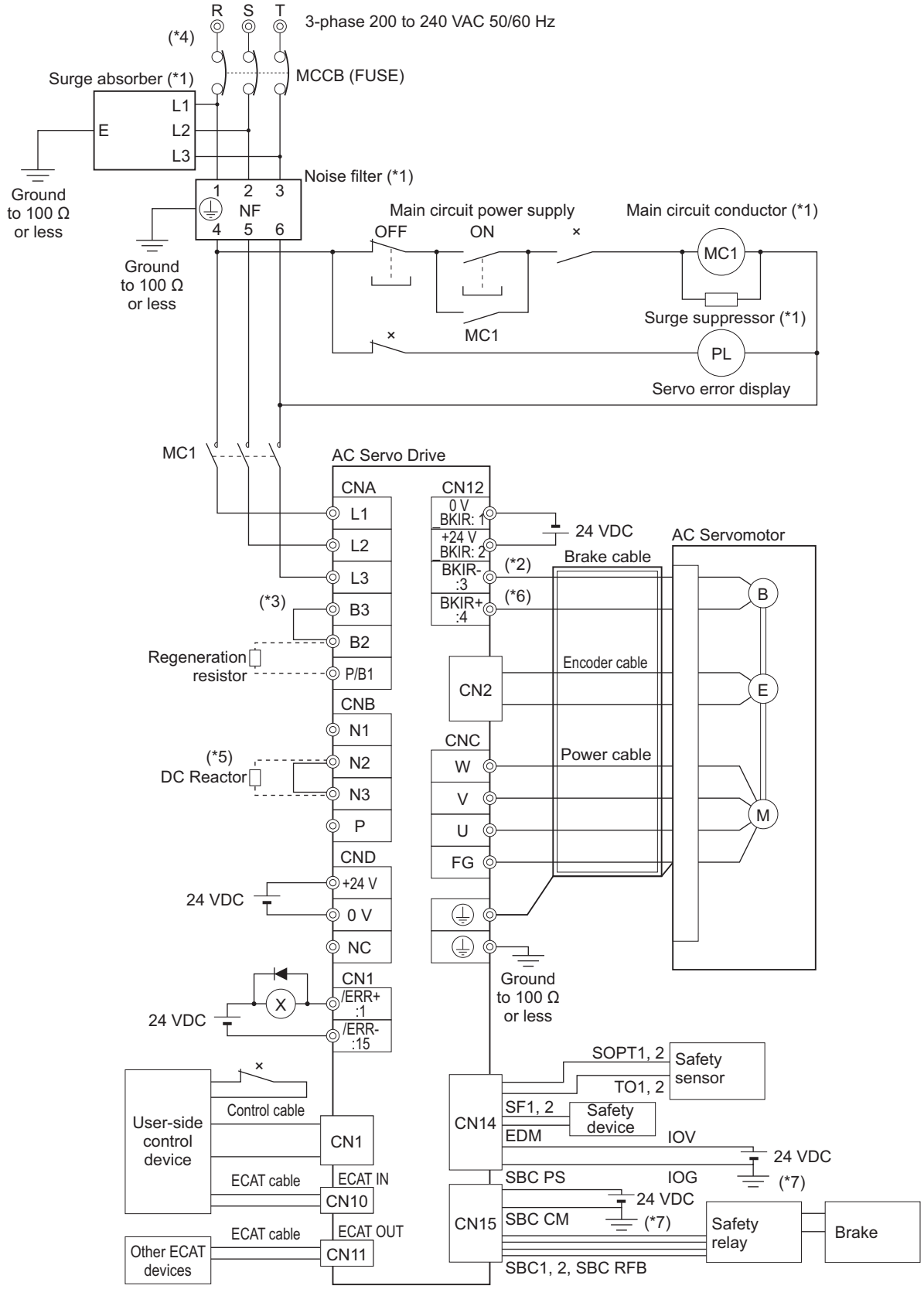

*1. Use one noise filter for each Servo Drive. However, you can connect more than one Servo Drive to one noise filter when you use the Servo Drives of 02H to 15H (200 to 240 VAC) with 3-phase input. Refer to *4-7 Noise Filter Installation Conditions When the Total Wire Length Is Long* on page 4-51. Selecting an unsuitable noise filter may result in a poor noise reduction effect. Also, a Servo Drive may produce some noise that travels through the power supply cable and causes unintended operation of other Servo Drives such as regeneration operation and Overvoltage Error.
When you use a noise filter, install a surge absorber on the LINE side of the noise filter.
Recommended noise filters and surge absorbers are listed in *4-3 Wiring Conforming to EMC Directives* on page 4-33.

*2. There is no polarity on the brakes.

*3. Short-circuit B2 and B3 for models with a built-in regeneration resistor (1SAN15H-ECT, 1SAN20H-ECT, and 1SAN30H-ECT). When the amount of regeneration is large, remove the short-circuit wire between B2 and B3 and connect a regeneration resistor between B1 and B2.

*4. To ensure safety, install a leakage breaker for the main circuit power supply input in the control panel.Refer to *4-3-2 Selecting Connection Component* on page 4-38.

*5. When the DC reactor is not used, short-circuit N1 and N2.
When the DC reactor is used, remove the short-circuit wire between N1 and N2, and connect the DC reactor between N1 and N2.

*6. External connection components are not required because a brake relay and a surge absorbing element are built into the Servo Drive.

*7. Ground 0V (IOG, SBC CM) of the power supply to detect a disconnection during input/output wiring and an error during ground fault.

Note When you connect PC to the USB connector of the Servo Drive, separate the USB cable from other cables such as the main circuit power supply cable.

WARNING

Design the configuration to cut off the main circuit power supply when the ERR signal (normally close contact) of the control output function is output (open).
Not doing so may cause a fire.

R88D-1SAN10F-ECT/-1SAN15F-ECT/-1SAN20F-ECT/-1SAN30F-ECT (380 to 480 VAC Neutral Grounding)

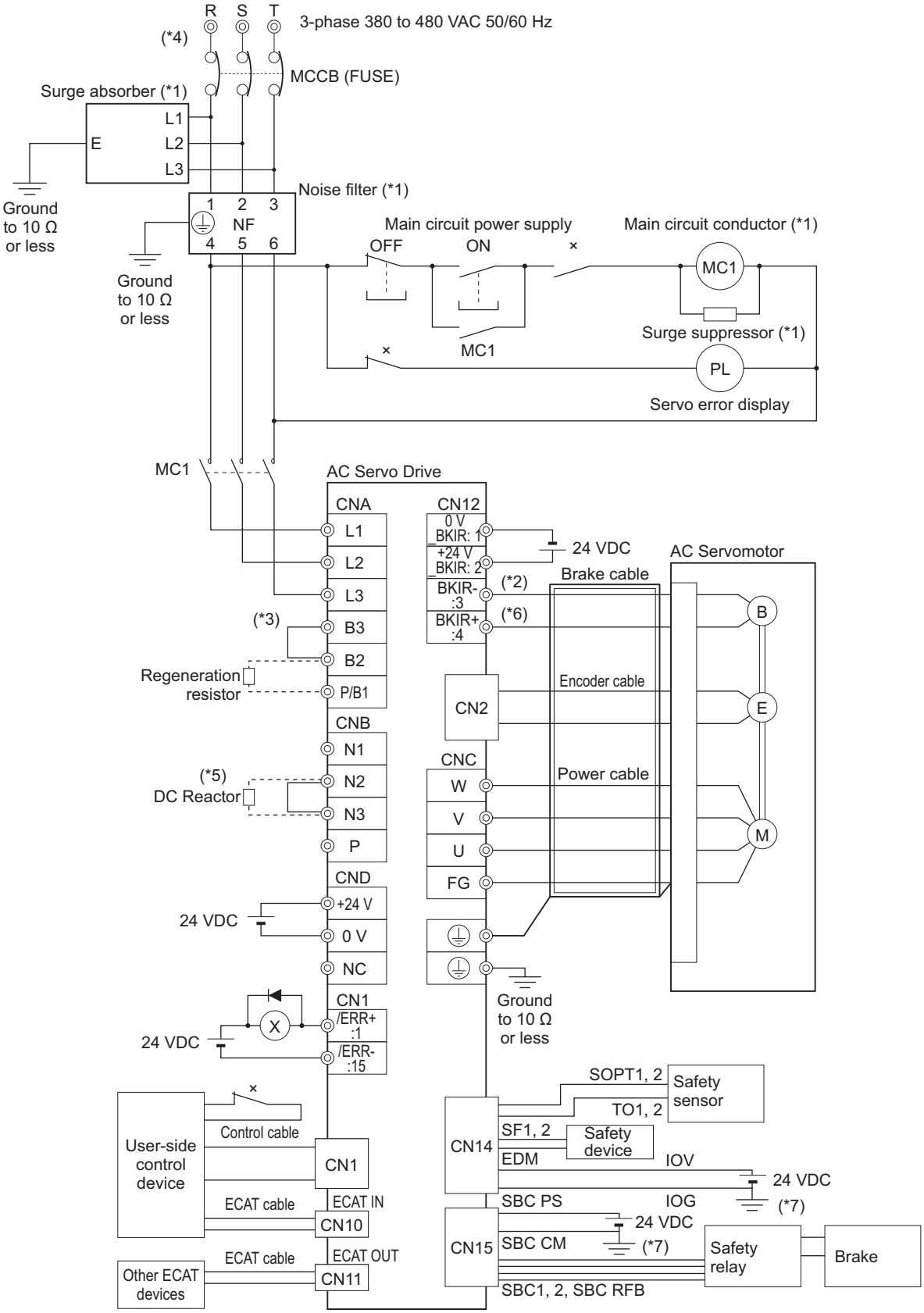

*1. Use one noise filter for each Servo Drive. Selecting an unsuitable noise filter may result in a poor noise reduction effect. Also, a Servo Drive may produce some noise that travels through the power supply cable and causes unintended operation of other Servo Drives such as regeneration operation and Overvoltage Error.
When you use a noise filter, install a surge absorber on the LINE side of the noise filter.
Recommended noise filters and surge absorbers are listed in *4-3 Wiring Conforming to EMC Directives* on page 4-33.

*2. There is no polarity on the brakes.

*3. Short-circuit B2 and B3 for models with a built-in regeneration resistor (1SAN15H-ECT, 1SAN20H-ECT, and 1SAN30H-ECT). When the amount of regeneration is large, remove the short-circuit wire between B2 and B3 and connect a regeneration resistor between B1 and B2.

*4. To ensure safety, install a leakage breaker for the main circuit power supply input in the control panel. For details on how to select a leakage breaker, refer to *4-3-2 Selecting Connection Component* on page 4-38.

*5. When the DC reactor is not used, short-circuit N1 and N2. When the DC reactor is used, remove the short-circuit wire between N1 and N2, and connect the DC reactor between N1 and N2.

*6. External connection components are not required because a brake relay and a surge absorbing element are built into the Servo Drive.

*7. Ground 0V (IOG, SBC CM) of the power supply to detect a disconnection during input/output wiring and an error during ground fault.

Note When you connect PC to the USB connector of the Servo Drive, separate the USB cable from other cables such as the main circuit power supply cable.

WARNING

Design the configuration to cut off the main circuit power supply when the ERR signal (normally close contact) of the control output function is output (open).
Not doing so may cause a fire.

4-2-2 Procedure for Wiring Connector-type Terminal Blocks and for Mounting a Shield Clamp

The procedures for wiring connector-type terminal blocks and integrated cables and mounting a shield clamp to the servo drive are explained below.

Precautions for Correct Use

- Wear the protective equipment when you perform the task. Do not apply any force to the opener (Servo Drive's accessory) after its protrusion reaches the bottom dead center. As a guide, do not apply the force of 100 N or more.
- When wiring, wear safety glasses and safety gloves in order to protect your eyes and hands from cables or shield clamps.

1 **Remove the terminal block from the Servo Drive before wiring.**

The Servo Drive may be damaged if the wiring is done with the terminal block in place.

2 **Strip off the covering from the wire.**

Refer to *Terminal Block Wire Sizes* on page 3-11 for applicable wire sizes. If the stripped wire is bended, loose or too large in diameter due to twist, retwist it gently and check its strip length by the use of a gauge before you use it. Smoothen the cut surface of wires and the stripped surface of covering. Or, you can use a ferrule.

- R88D-1SAN02H-ECT/-1SAN04H-ECT/-1SAN08H-ECT/-1SAN10H-ECT

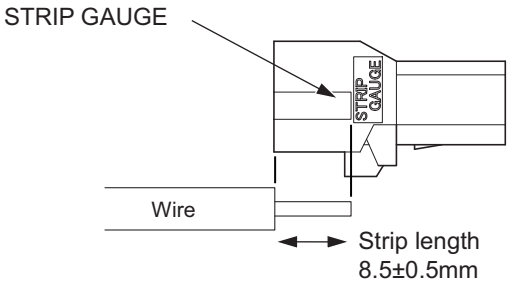

- R88D-1SAN15H-ECT/-1SAN20H-ECT/-1SAN30H-ECT/-1SAN10F-ECT/-1SAN15F-ECT/-1SAN20F-ECT/-1SAN30F-ECT

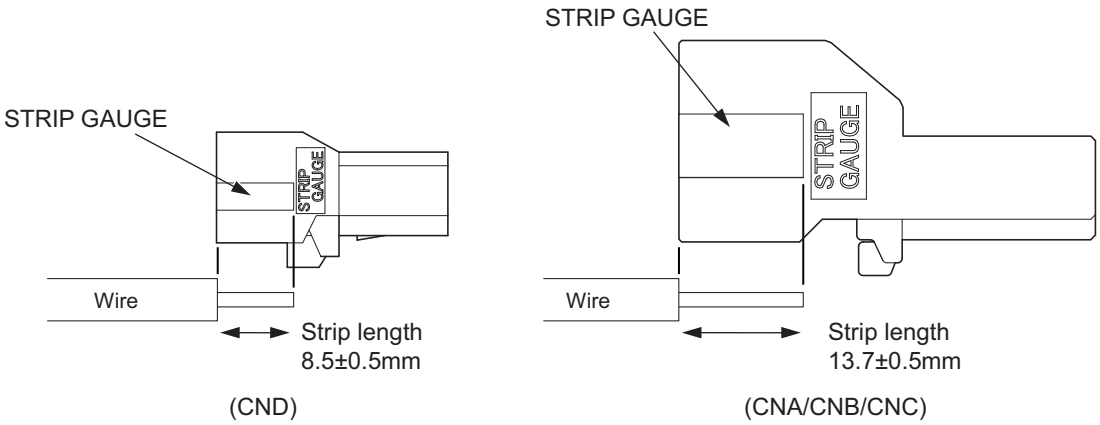

3 **Connect the wires.**

Insert the hook of the spring opener into a square hole located on the same side as the wire holes, and use your thumb to press down the lever of the spring opener until it clicks into place. Insert the wire fully into the back of a wire hole while the lever of the spring opener is held down. Release the lever, and then pull the wire gently to check that it does not come out.

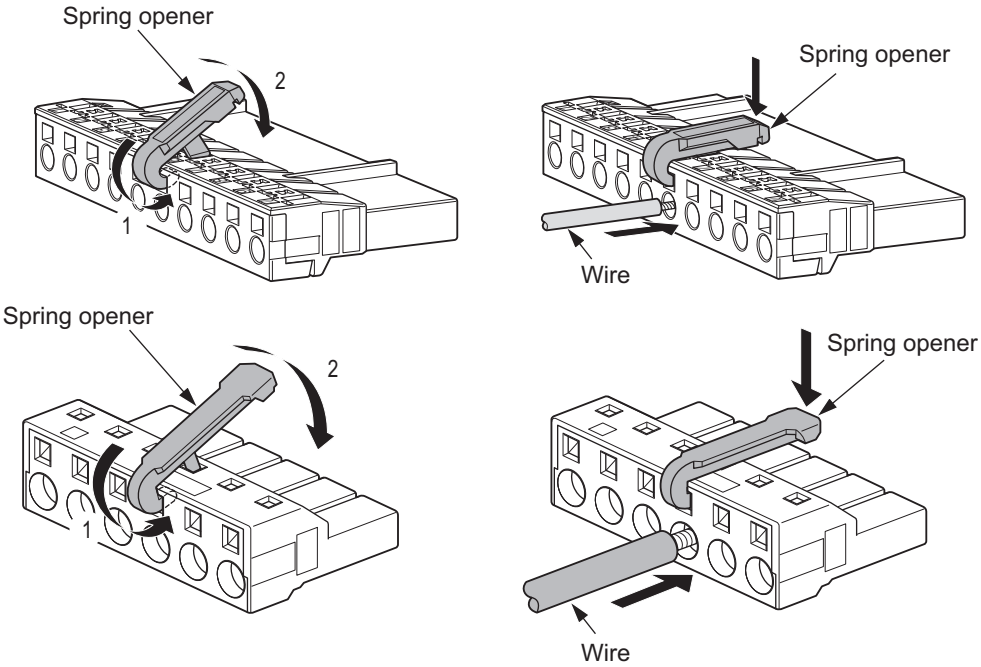

4 **Mount a shield clamp bracket to a Servo Drive.**

Tightening torque: 1.5 N•m

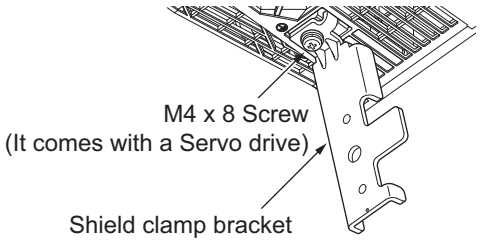

5 **Mount the shield clamp plate to the shield clamp bracket.**

Tightening torque: 1.5 N•m

- Do not cut cable ties.

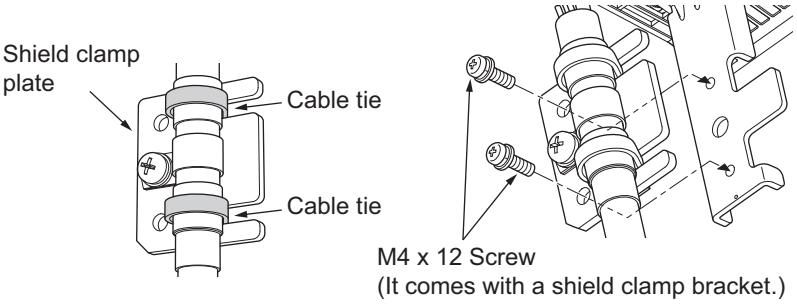

- Do not put loads on the cable and the shield clamp such as twisting, pushing and pulling etc.

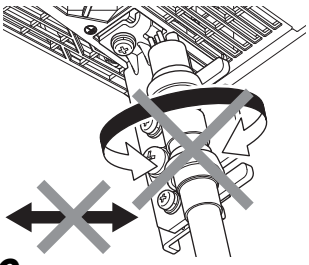

6 **Mount the terminal block to the Servo Drive.**

After all of the terminals are wired, return the terminal block to its original position on the Servo Drive.

Note The wire may not be inserted easily depending on the shape of the ferrule connected to it. If this occurs, perform one of the following methods to insert the wire.

- Change the direction of inserting the connector by 90°.
- Correct the shape of the ferrule with tools such as pliers.

4-2-3 Procedure for Attaching an Integrated Connector

This section describes a procedure for attaching an integrated connector in a Servomotor. Use the following procedure to fit the connector.

Precautions for Correct Use

Be sure to unwind integrated cables wound for packing before mating integrated connectors to the cables. Damage or breakage of the connectors and the cables may result due to the twisting forces, if the wound cables are mated to the connectors.

Servomotor side connector

● Procedure for mounting connectors

1 Turn the knurling nut of a cable plug to counterclockwise direction.

When a printed “open” on the nut is aligned with a mark of the cable plug, the nut stops. If not aligned, the knurling nut cannot be inserted to the motor receptacle firmly.

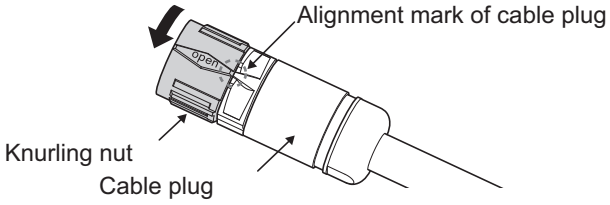

Type M23 Connector

2 Align a mark of the motor receptacle with the printed “open” on the knurling nut.

3 Insert the knurling nut into the receptacle as far as it goes.

At this time, push the nut linearly in a state that a printed “open” on the nut lines up with a mark of the cable plug.

- Type M17 Connector

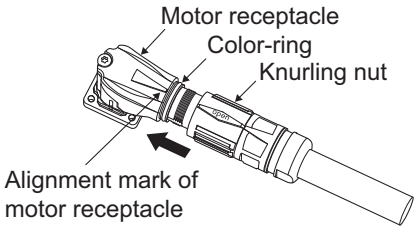

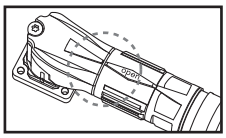

State of a knurling nut inserted to a motor receptacle firmly

- Type M23 Connector

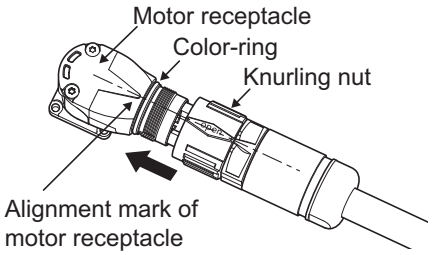

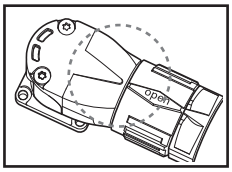

State of a knurling nut inserted to a motor receptacle firmly

4 Turn the knurling nut to clockwise direction until it stops.

The connector is locked by turning the knurling nut until it stops.

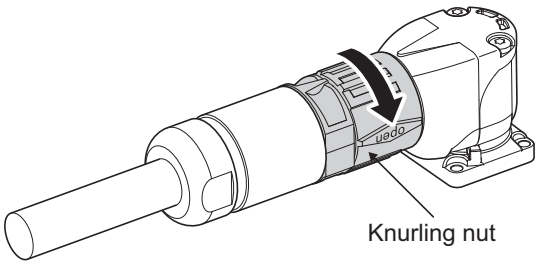

- **Procedure for detaching connectors**

1 Turn the knurling nut of the cable plug to counterclockwise direction.

When the printed “open” lines up with a mark of the cable plug, the mating is unlocked.

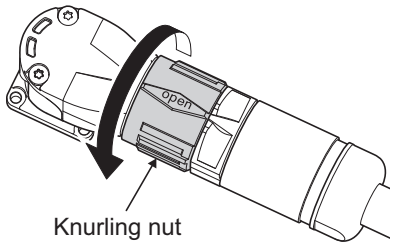

2 Pull the cable plug out the motor receptacle linearly.

At this time, do not move the cable plug up and down or right and left.

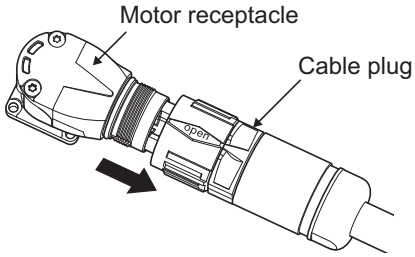

Precautions for Correct Use

- Before mating the motor receptacle into the cable plug, check for dirt and foreign substances on the surface of each mating site. Do not carry out the mating in locations subject to exposure to water and oil.
- Insert a cable into a Servomotors securely and fix a knurling nut.
- Unwind a winding cable from packing before mounting the cable to a connector. Not doing so results in twisted force to apply to the connector and the cable. That may cause damage of the connector and the cable.

Extension Cable

For connector for extension cable, turn it horizontally before its locking.

4-2-4 Procedure for Change of Cable Outlet Direction for Integrated Cable

This section describes a procedure for change of cable outlet direction for connector Type M17 or M23.

The change of cable outlet directions shall be up to five times. Pre-determine the cable outlet directions such as mounting a Servomotor to devices, etc. before the change.

1 Determine the cable outlet directions.

Refer to *2-4-3 Cable Outlet Direction of Integrated Connector* on page 2-43 to fix the cable outlet direction. The connector has a dead angle. When you change the cable outlet direction, avoid excessive force applied to the connector. Otherwise, failures of the connector may result.

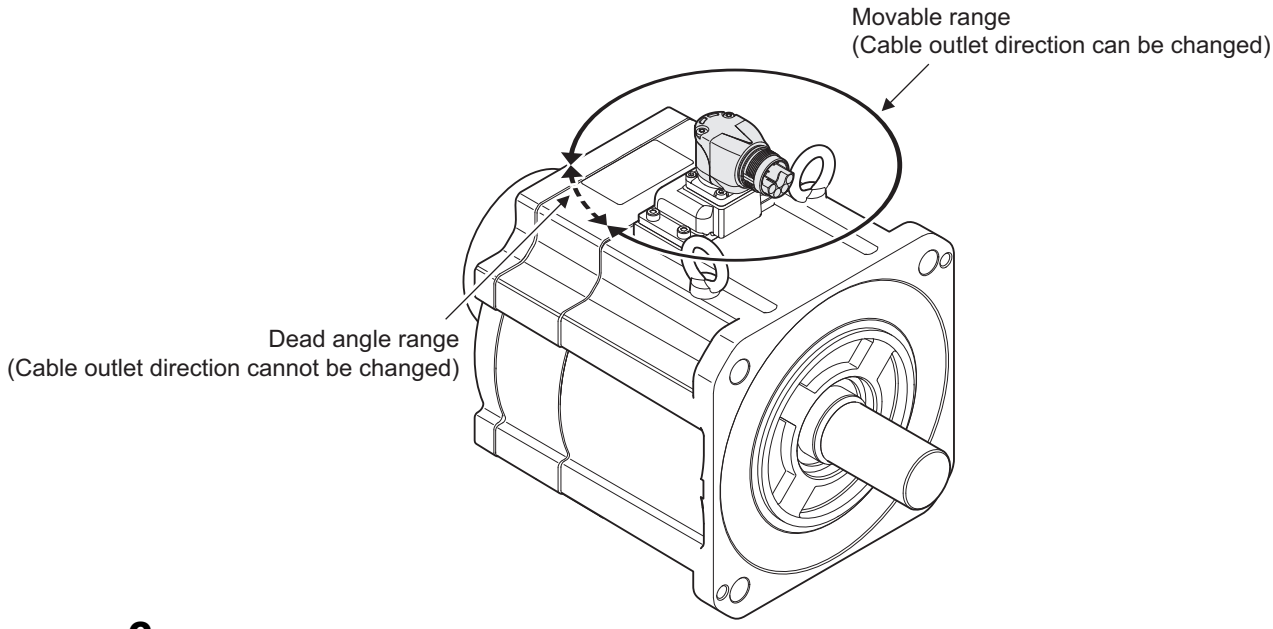

2 Mount a cable and lock it firmly.

Mount a cable to a connector, referring to *4-2-3 Procedure for Attaching an Integrated Connector* on page 4-29.

Lock a cable securely to be fixed to a connector. If the lock is loosened, a connector is removed. That may cause injury and failure of a connector.

3 Place your hand on the end of a connector at a cable side and apply force slowly toward movable direction to change the cable outlet direction.

Apply force horizontally to movable directions. When you apply force to the end of a connector, the force over 100 N is required. Force applied to not-specified direction may result in failure of a connector.

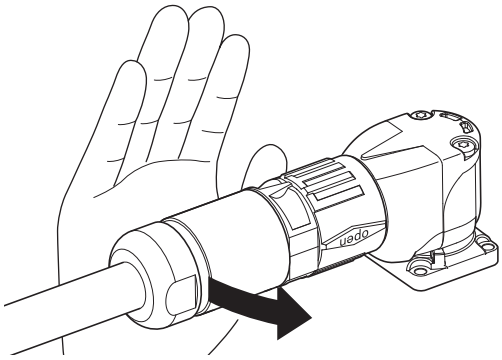

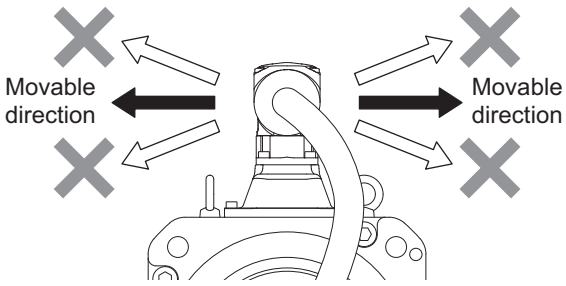

Use your hand, instead of tool, etc. when changing the cable outlet direction. Otherwise, a large amount of force is applied easily even toward not-specified direction and may cause failure of the connector.

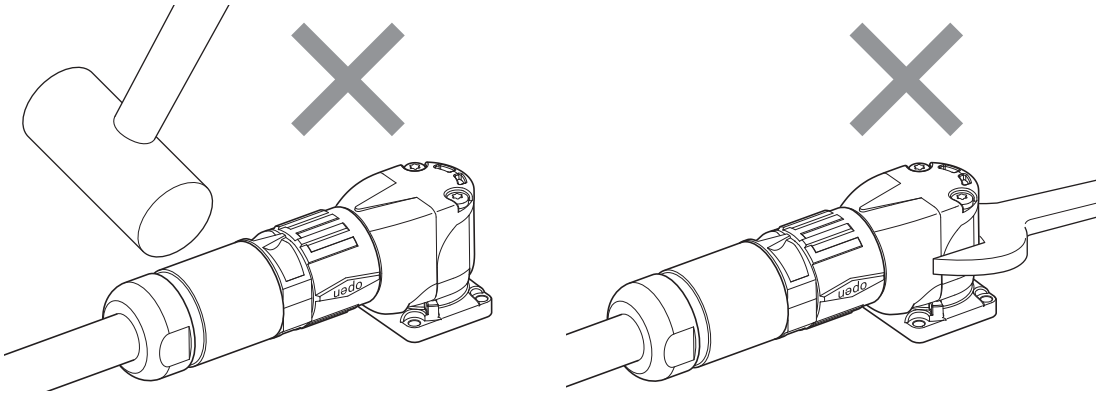

Do not pull out a cable during the change of cable outlet direction. Doing so may cause failures of a connector and a cable. Also, the change shall be up to five times. The change over five times may result in failure of the connector.

Precautions for Correct Use

Wire cables not to contact with Servomotors, which have high temperature.

4-3 Wiring Conforming to EMC Directives

1S-series Servo Drives Advance Type conform to the EMC Directives (EN 61800-3) under the wiring conditions described in this section.

The following conditions are determined so that 1S-series Servo Drive Advance Type can conform to EMC Directives. When the products are installed in the equipment, the customer must perform the check to confirm that the overall machine conforms to EMC Directives.

The following are the conditions required for conformance to the EMC Directives.

- Install the Servo Drive on the ground plate.
- Install a noise filter and lightening surge absorbing element (surge absorber) on the power line.
- Use an integrated cable of 20 m or less.
- Use braided-shield cables for the I/O signals and encoder. Tinned soft steel wires must be used for the shields.
- Ground the shield of each cable.

For how to wire and install a noise filter, refer to *4-1-5 Noise Filter Installation Conditions* on page 4-13.

Additional Information

- When an integrated cable connected to one 3-phase 200-V input model of Servo Drive, described in *4-7 Noise Filter Installation Conditions When the Total Wire Length Is Long* on page 4-51, is longer than 20 m or when you connect more than one 3-phase 200-V input model of Servo Drive at 1.5 kW or less to one noise filter, the noise filter installation conditions of these cases are different from the conditions for conformity to the EMC Directives of 1S-series products Advance Type.
- Selecting an unsuitable noise filter may result in a poor noise reduction effect.

4-3-1 Peripheral Equipment Connection Examples

R88D-1SAN02H-ECT/-1SAN04H-ECT/-1SAN08H-ECT/-1SAN10H-ECT

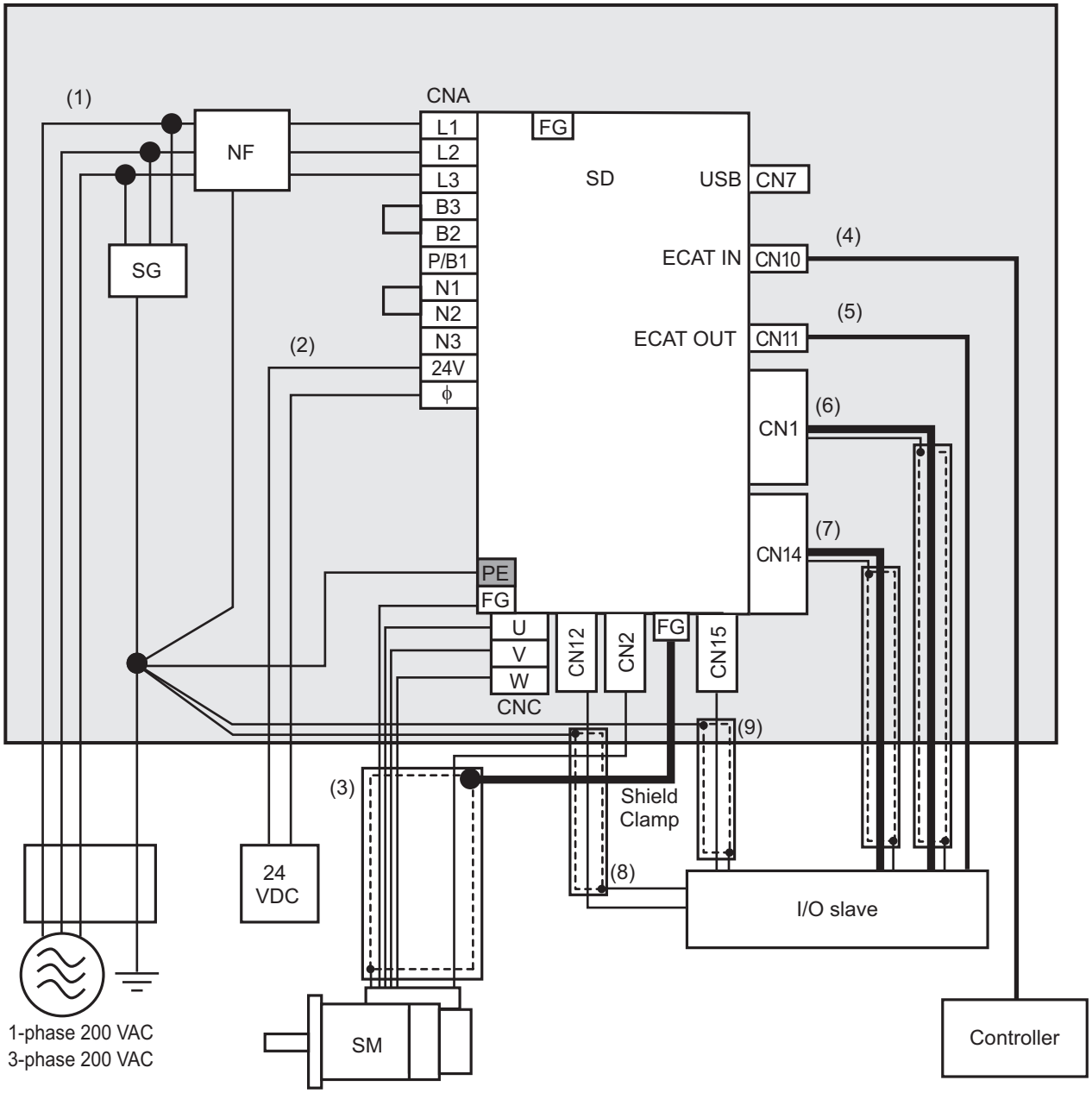

Note For single-phase inputs, connect between any two phases out of the following: L1, L2, and L3.

- Provide single-point grounding of the ground plate for unit frame grounding as shown in the above diagram.
- Use a protective earth wire with a minimum thickness of 2.5 mm^2 and arrange the wiring so that the protective earth wire is as short as possible.
- Install a surge absorber and noise filter near the main circuit connector A of Servo Drive. Separate I/O wires from each other for the wiring.
- R88D-1SAN10H-ECT only supports 3-phase power supply.

● Device Details

Symbol	Name	Manufacturer	Model	Remarks
SG	Surge absorber	Soshin Electric Co., Ltd.	LT-C12G801WS	1-phase 200 VAC
			LT-C32G801WS	3-phase 200 VAC
NF	Noise filter	Soshin Electric Co., Ltd.	HF2020A-SZC-33DDD *1	1-phase 200 VAC (20 A)
			HF3020C-SZC-33DDD *1	3-phase 200 VAC (20 A)
SD	Servo Drive	OMRON	---	*2
SM	Servomotor	OMRON	---	*2
---	I/O slave	---	---	---
---	Controller	---	---	---

*1. Consult Soshin Electric Co., Ltd.

*2. Refer to *2-3-3 Servo Drive and Servomotor Combination Tables* on page 2-12 for Servo Drive and Servomotor combinations.

● Cable Details

No.	Interface	Max cable length/Shield or unshielded	Cable classification		Ferrite core
			EN/IEC 61800-3	EN/IEC 61000-6-7	
1	Power Cable (Main Circuit)	3 m Unshielded	Power port	AC Input power port	None
2	Power Cable (Control Circuit)	3 m Unshielded	Process measurement control port	Signal and control cable	None
3	Integrated cable (Motor/Encoder)	20 m Shielded	Power Interface	Signal and control cable	None
4	EtherCAT communications cable (ECAT IN)	20 m Shielded	Signal Interface	Signal and control cable	None
5	EtherCAT communications cable (ECAT OUT))	20 m Shielded	Signal Interface	Signal and control cable	None
6	Control I/O cable	20 m Shielded	Signal Interface	Signal and control cable	None
7	Safety cable	20 m Shielded	Signal Interface	Signal and control cable	None
8	Brake Interlock cable	20 m Shielded	Signal Interface	Signal and control cable	None
9	SBC cable	20 m Shielded	Signal Interface	Signal and control cable	None

R88D-1SAN15H-ECT/-1SAN20H-ECT/-1SAN30H-ECT/-1SAN10F-ECT/-1SAN15F-ECT/-1SAN20F-ECT/-1SAN30F-ECT

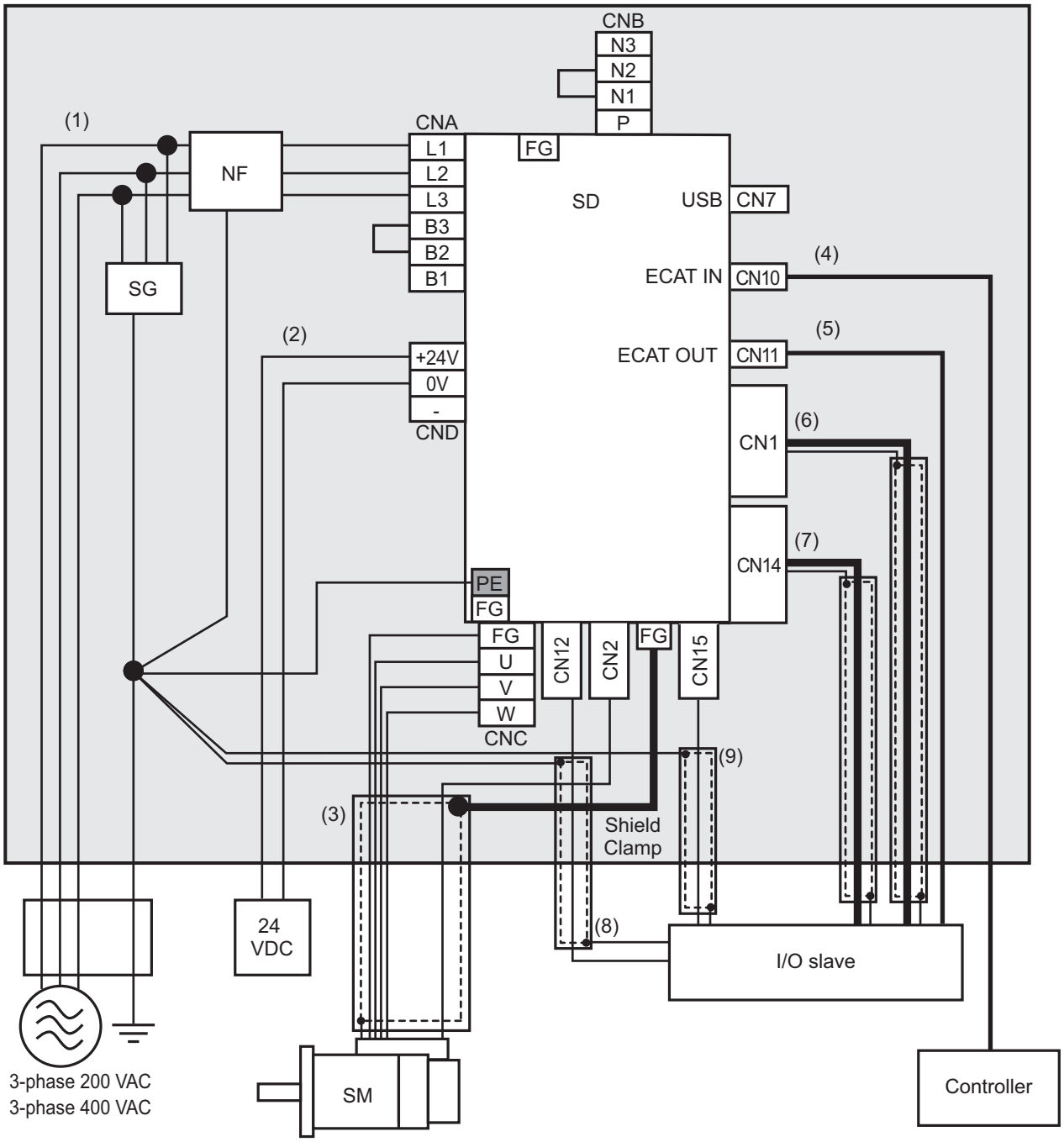

Note For single-phase inputs, connect between any two phases out of the following: L1, L2, and L3.

- Provide single-point grounding of the ground plate for unit frame grounding as shown in the above diagram.
- Use a protective earth wire with a minimum thickness of 2.5 mm^2 and arrange the wiring so that the protective earth wire is as short as possible.
- Install a surge absorber and noise filter near the main circuit connector A of Servo Drive. Separate I/O wires from each other for the wiring.
- Only R88D-1SAN15H-ECT supports single-phase power supply voltage.

● Device Details

Symbol	Name	Manufacturer	Model	Remarks
SG	Surge absorber	Soshin Electric Co., Ltd.	LT-C12G801WS	1-phase 200 VAC
			LT-C32G801WS	3-phase 200 VAC
			LT-C35G102WS	3-phase 400 VAC
NF	Noise filter	Soshin Electric Co., Ltd.	HF2020A-SZC-33DDD *1	1-phase 200 VAC (20 A)
			HF3020C-SZC-33DDD *1	3-phase 200 VAC (20 A)
			HF3020C-SZC*1	3-phase 400 VAC (20 A)
SD	Servo Drive	OMRON	---	*2
SM	Servomotor	OMRON	---	*2
---	I/O slave	---	---	---
---	Controller	---	---	---

*1. Consult Soshin Electric Co., Ltd.

*2. Refer to *2-3-3 Servo Drive and Servomotor Combination Tables* on page 2-12 for Servo Drive and Servomotor combinations.

● Cable Details

No.	Interface	Max cable length/Shield or unshielded	Cable classification		Ferrite core
			EN/IEC 61800-3	EN/IEC 61000-6-7	
1	Power Cable (Main Circuit)	3 m Unshielded	Power port	AC Input power port	None
2	Power Cable (Control Circuit)	3 m Unshielded	Process measurement control port	Signal and control cable	None
3	Integrated cable (Motor/Encoder)	20 m Shielded	Power Interface	Signal and control cable	None
4	EtherCAT communications cable (ECAT IN)	20 m Shielded	Signal Interface	Signal and control cable	None
5	EtherCAT communications cable (ECAT OUT)	20 m Shielded	Signal Interface	Signal and control cable	None
6	Control I/O cable	20 m Shielded	Signal Interface	Signal and control cable	None
7	Safety cable	20 m Shielded	Signal Interface	Signal and control cable	None
8	Brake Interlock cable	20 m Shielded	Signal Interface	Signal and control cable	None
9	SBC cable	20 m Shielded	Signal Interface	Signal and control cable	None

4-3-2 Selecting Connection Component

This section describes the criteria for selecting connection components that are required to improve noise immunity.

Thoroughly understand the characteristics such as capacity, performance, and the range of application of the connection components before you select them.

Consult the manufacturer for details of the parts.

Molded Case Circuit Breaker (MCCB)

Select a molded case circuit breaker based on the maximum input current and inrush current.

● Maximum Input Current

- Select a molded case circuit breaker which can operate 10 seconds or more at the maximum output current of the Servo Drive. For details on the maximum output current of the Servo Drive, refer to *3-1-2 Characteristics* on page 3-4.
- Select a molded case circuit breaker with a rated current larger than the sum of the effective load current (when multiple Servo Drives are used). Refer to *Main Circuit and Motor Connections* on page 3-9 for the rated current of the power supply input for each motor.
- When you select a molded case circuit breaker, add the current consumption by other devices such as the Controller.

● Inrush Current

- The following table shows the inrush current of the Servo Drives.
- The amount of inrush current that a low-speed type molded case circuit breaker can flow for 0.02 seconds is approximately 10 times higher than the rated current.
- To turn ON the power supply for multiple Servo Drives simultaneously, select a molded case circuit breaker whose allowable current in 20 ms is larger than the sum of the inrush currents shown in the following table.
- The inrush current of the control power supply is limited by the output capacity of the DC power supply in use.

Servo Drive model	Inrush current (Ao-p)
	Main circuit power supply
R88D-1SAN02H-ECT	16 A
R88D-1SAN04H-ECT	16 A
R88D-1SAN08H-ECT	16 A*1
R88D-1SAN10H-ECT	16 A*1
R88D-1SAN15H-ECT	29 A
R88D-1SAN20H-ECT	29 A
R88D-1SAN30H-ECT	29 A
R88D-1SAN10F-ECT	32 A
R88D-1SAN15F-ECT	32 A
R88D-1SAN20F-ECT	32 A
R88D-1SAN30F-ECT	32 A

*1. If an external regeneration resistor is attached, the inrush currents of the main circuit power supplies in the above table will be increased.
(Increase in current = √2 × main circuit power supply voltage/external regeneration resistance)

The value of the inrush current varies depending on the input voltage to the Servo Drive. The values shown above are for the following input voltages.

Model	Main circuit power supply voltage
R88D-1SAN□H-ECT	240 VAC
R88D-1SAN□F-ECT	480 VAC

Leakage Breaker

- Select a leakage breaker which is made for high frequency and surge resistance.
- When you determine the threshold value for leakage current detection, add the total leakage current from all devices that are connected to the same breaker.
- Refer to the catalogs from the manufacturers for details on how to select a leakage breaker and ensure a sufficient margin.

Servo Drive model (R88D-)	Servomotor model (R88M-)	Integrated Cable model (R88A-)*1	Leakage current (mA)*2							
			3 m	5 m	10 m	15 m	20 m	30 m	40 m	50 m
1SAN02H-ECT	1AM20030T	CX1A□□□F	3.4	3.4	3.5	3.5	3.6	3.8	3.9	4.1
1SAN04H-ECT	1AM40030T									
1SAN08H-ECT	1AM75030T									
1SAN15H-ECT	1AL1K530T	CX1B□□□F	3.5	3.5	3.6	3.7	3.8	3.9	4.1	4.3
	1AM1K515T	CX1C□□□F	3.5	3.5	3.6	3.7	3.8	4.0	4.2	4.4
1SAN10H-ECT	1AL1K030T									
1SAN20H-ECT	1AL2K030T	CX1D□□□F	3.6	3.6	3.7	3.8	3.9	4.1	4.2	4.4
1SAN30H-ECT	1AM2K715T									
	1AL2K630T									
1SAN10F-ECT	1AL75030C	CX1C□□□F	3.5	3.5	3.7	3.8	4.0	4.2	4.5	4.8
	1AL1K030C									
1SAN15F-ECT	1AM1K515C									
	1AL1K530C									
1SAN20F-ECT	1AL2K030C									
1SAN30F-ECT	1AM3K015C									
	1AL3K030C									

*1. 3 m to 20 m: Only Integrated Cable
30 m: Integrated Cable (20 m) + Extension Cable (10 m)
40 m: Integrated Cable (20 m) + Extension Cable (20 m)
50 m: Integrated Cable (20 m) + Extension Cable (10 m) + Extension Cable (20 m)

*2. Wiring conforming to the EMC Directives is 20 m.

Note The value of leakage current significantly varies in installation conditions of integrated cable or the measurement conditions. Use the above list for your reference.

Surge Absorber

- Use a surge absorber to absorb the lightning surge voltage and the abnormal voltage from the power input line.
- The following table gives the recommended surge absorber specifications.

Servo Drive voltage	Surge current tolerance	Recommended manufacturer	Recommended model
Single-phase 200 VAC	410 V±20%, 2500 A	Soshin Electric Co., Ltd.	LT-C12G801WS
3-phase 200 VAC	410 V±20%, 2500 A	Soshin Electric Co., Ltd.	LT-C32G801WS
3-phase 400 VAC	800 V±20%, 2500 A	Soshin Electric Co., Ltd.	LT-C35G102WS

Note 1. Refer to the catalogs from the manufacturer for how to use.
2. The surge current tolerance is the value for the standard impulse current of 8/20 μs. For a greater pulse width, reduce the current or change the surge absorber to the one with a higher capacity.
3. Select a CSA-certified product when you use a surge absorber.

● External Dimensions

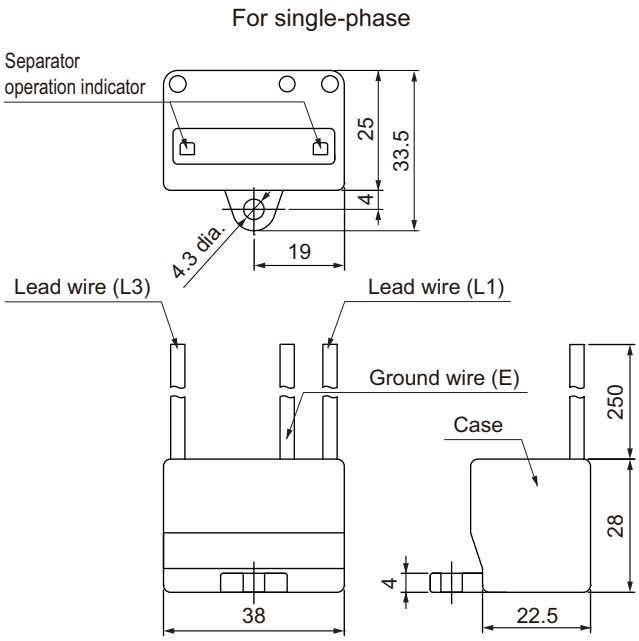

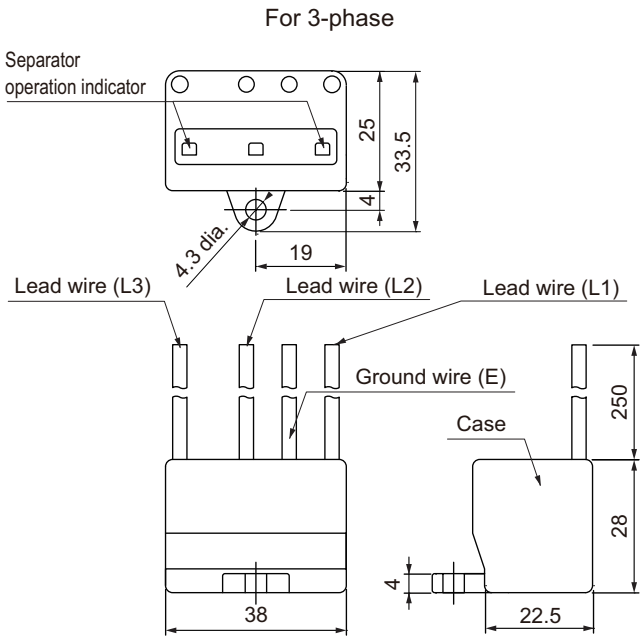

● Equivalent Circuit

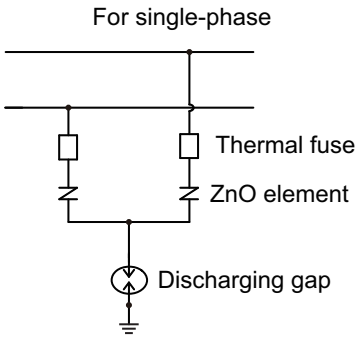

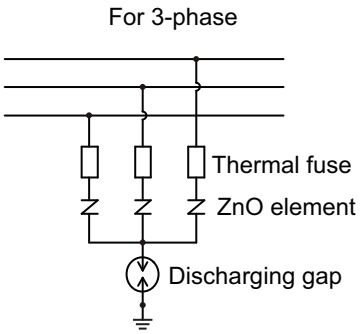

Surge Suppressors

- Install surge suppressors for a load with an induction coil such as a relay, solenoid, and clutch.
- The following table gives the types of surge suppressors and the recommended products.

Type	Feature	Recommended product
Diode	Diodes are used for relatively small loads such as relays when the reset time is not an issue. The surge voltage at power cutoff is the lowest, but the reset time takes longer. Used for 24/48-VDC systems.	Use a high-speed diode, especially the fast-recovery diode with short reverse recovery time such as RU2 made by San-ken Electronic Co., Ltd.
Varistor	Thyristors and varistors are used for loads when an induction coil is large, as in a solenoid, and when reset time is an issue. The surge voltage at power cutoff is approximately 1.5 times the varistor voltage.	Select the varistor voltage according to the following list. • 24-VDC type: varistor voltage 39 V • 200-VAC type: varistor voltage 470 V
Capacitor and resistor	The combination of capacitor and resistor is used to absorb vibration in the surge at power cutoff. You can shorten the reset time by selecting the appropriate capacitance and resistance.	Okaya Electric Industries Co., Ltd. XEB12002 0.2 μF - 120 Ω XEB12003 0.3 μF - 120 Ω

- The manufacturer of varistor is shown below. Refer to the catalogs from the manufacturer for details.
  Varistor: SEMITEC Corporation, Panasonic Corporation

Contactor

Select a contactor based on the inrush current that flows through circuits and the maximum momentary phase current.

For details on the inrush current of the Servo Drives, refer to *Molded Case Circuit Breaker (MCCB)* on page 4-38.

Improving Noise Immunity of Control I/O Signals

The I/O signals may malfunction if control I/O is affected by noise.

- Use the control I/O power supply (especially 24 VDC) which is completely separated from the external power supply used for operation. Especially, be careful not to connect the ground wires of these two power supplies.
- Install a noise filter on the primary side of the control I/O power supply.
- When you use a motor with a brake, do not share the 24 VDC power supply between the brake and the control I/O (24 VDC). Also, do not connect the ground wires. Doing so may cause I/O signals to malfunction.
- If there is a long wiring for the control I/O power supply, you can improve its noise immunity by adding an approximately 1-μF laminated ceramic capacitor between the control I/O power supply and the ground at the Servo Drive's input section or the Controller's output section.

Reactor for Harmonic Current Reduction

Countermeasure against Harmonic Current

- Use a reactor to suppress the harmonic current. A reactor can suppress a sharp change in current.
- Select the reactor according to the model of your Servo Drive.

Applicable Servo Drive		DC Reactor		
Voltage	Model	Model	Rated current	Inductance (0% to 20%)
200 VAC	R88D-1SAN02H-ECT	R88A-PD2002	1.6 A	21.4 mH
	R88D-1SAN04H-ECT	R88A-PD2004	3.2 A	10.7 mH
	R88D-1SAN08H-ECT	R88A-PD2007	6.1 A	6.75 mH
	R88D-1SAN10H-ECT	R88A-PD2015	9.3 A	3.51 mH
	R88D-1SAN15H-ECT			
	R88D-1SAN20H-ECT	R88A-PD2022	13.8 A	2.51 mH
	R88D-1SAN30H-ECT	R88A-PD2037	22.3 A	1.6 mH
400 VAC	R88D-1SAN10F-ECT	R88A-PD4015	4.7 A	14 mH
	R88D-1SAN15F-ECT			
	R88D-1SAN20F-ECT	R88A-PD4022	6.9 A	10.1 mH
	R88D-1SAN30F-ECT	R88A-PD4037	11.6 A	6.4 mH

DC Reactor Connection

As shown in the following figure, remove the short-circuit wire between N1 and N2, and connect the DC Reactor between N1 and N2.

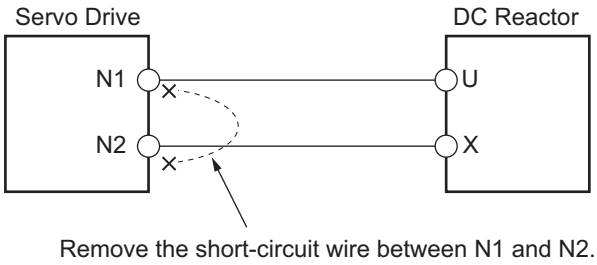

4-4 Regenerative Energy Absorption

The Servo Drives have a built-in capacitor, which absorbs the regenerative energy produced during motor deceleration, etc. When the built-in capacitor cannot absorb all regenerative energy, the Internal Regeneration Resistor absorbs the rest of the energy. If the amount of regenerative energy from the Servomotor is too large, regeneration operation stops and an Overvoltage Error occurs in order to prevent the Internal Regeneration Resistor from burning.
If this occurs, reduce the regenerative energy by changing operating patterns, or increase the regeneration process capacity by connecting an External Regeneration Resistor.

Additional Information

- Some Servo Drive models do not have the Internal Regeneration Resistor.
- Regenerative energy absorption capacity depends on the Servo Drive model.
  Refer to *Amount of Internal Regeneration Absorption in Servo Drives* on page 4-46 for checking the Servo Drive model with Internal Regeneration Resistor and its regenerative energy absorption capacity.

4-4-1 Calculating the Regenerative Energy

Regenerative energy calculation for a horizontal axis is explained.

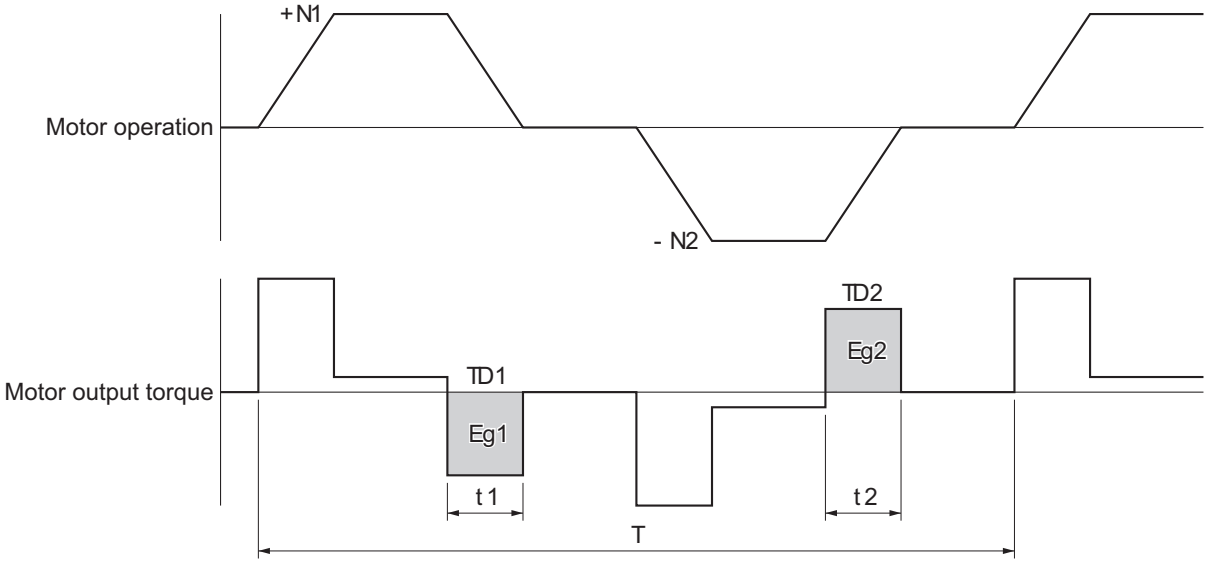

- In the output torque graph, acceleration in the positive direction is shown as positive (+), and acceleration in the negative direction is shown as negative (-).
- The regenerative energy values in each region can be calculated from the following equations.

$$E_{g1} = \frac{1}{2} \cdot \frac{2\pi}{60} \cdot N_1 \cdot T_{D1} \cdot t_1 \text{ [J]}$$

$$E_{g2} = \frac{1}{2} \cdot \frac{2\pi}{60} \cdot N_2 \cdot T_{D2} \cdot t_2 \text{ [J]}$$

N_1, N_2 : Rotation speed at start of deceleration [r/min]

T_{D1}, T_{D2} : Deceleration torque [N·m]

t_1, t_2 : Deceleration time [s]

Note Due to the loss from motor winding resistance and inverter, the actual regenerative energy will be approximately 90% of the values calculated from the above equations.

Regenerative energy calculation for a vertical axis is explained.

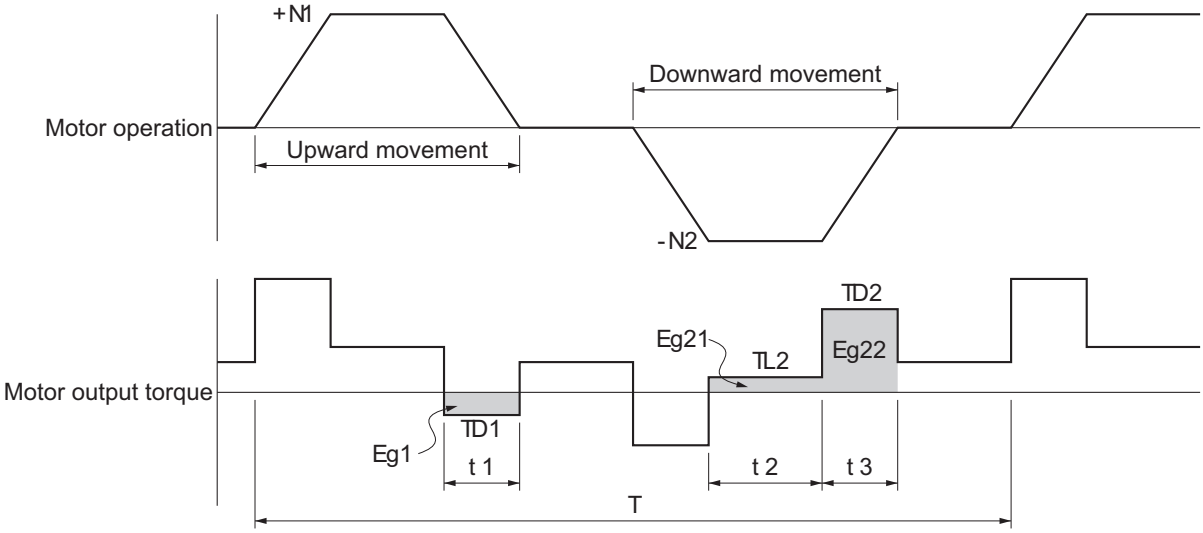

- In the output torque graph, acceleration in the rising direction is shown as positive (+), and acceleration in the falling direction is shown as negative (-).
- The regenerative energy values in each region can be calculated from the following equations.

$$E_{g1} = \frac{1}{2} \cdot \frac{2\pi}{60} \cdot N_1 \cdot T_{D1} \cdot t_1 \quad [J]$$

$$E_{g21} = \frac{2\pi}{60} \cdot N_2 \cdot T_{L2} \cdot t_2 \quad [J]$$

$$E_{g22} = \frac{1}{2} \cdot \frac{2\pi}{60} \cdot N_2 \cdot T_{D2} \cdot t_3 \quad [J]$$

$$E_{g2} = E_{g21} + E_{g22} \quad [J]$$

N1, N2 : Rotation speed at start of deceleration [r/min]

TD1, TD2 : Deceleration torque [N·m]

TL2 : Torque during downward movement [N·m]

t1, t3 : Deceleration time [s]

t2 : Constant-speed driving time during downward movement [s]

Note Due to the loss from winding resistance, the actual regenerative energy will be approximately 90% of the values calculated from these equations.

Regenerative Energy Absorption by Built-in Capacitor

If both of the previously mentioned values Eg1 and Eg2 [J] are smaller than or equal to the amount of regenerative energy Ec [J] that the Servo Drive's built-in capacitor can absorb, the built-in capacitor can process all regenerative energy.

If either of Eg1 and Eg2 [J] is larger than the amount of regenerative energy Ec [J] that the Servo Drive's built-in capacitor can absorb, use the following equation to calculate the average amount of regenerative power Pr [W].

$$E_g = (E_{g1} - E_c) + (E_{g2} - E_c) \text{ [J]}$$

$$P_r = E_g / T \text{ [W]}$$

P_r : Average regenerative power that must be absorbed in one cycle of operation [W]

E_g : Regenerative energy that must be absorbed in one cycle of operation [J]

E_c : Regenerative energy that the drive's built-in capacitor can absorb [J]

T : Operation cycle [s]

Note If the result of (E_{g1} - E_c) is zero or less, then assign 0 to the result. The same applies to the case where (E_{g2} - E_c) is zero or less.

The above equation calculates the average regenerative power Pr [W] that cannot be absorbed by the built-in capacitor.

If this average regenerative power Pr [W] is smaller than or equal to the average regenerative power which the Servo Drive's Internal Regeneration Resistor can absorb, the Servo Drive can process all regenerative energy.

If the Internal Regeneration Resistor cannot process the average regenerative power Pr [W], take the following measures.

- Connect an External Regeneration Resistor. Regenerative process capacity improves.
- Reduce the operating rotation speed. The amount of regenerative energy is proportional to the square of the rotation speed.
- Lengthen the deceleration time. Regenerative energy per unit time decreases.
- Lengthen the operation cycle, i.e., the cycle time. Average regenerative power decreases.

4-4-2 Servo Drive Regeneration Absorption Capacity

Amount of Internal Regeneration Absorption in Servo Drives

The following table shows the amount of regenerative energy and regenerative power that each Servo Drive can absorb. If the regenerative energy exceeds these values, take measures as mentioned previously.

Servo Drive specifications				Regenerative energy specifications		
Single-phase/ 3-phase	Main circuit power supply voltage	Rated output	Model	Regenerative energy to be absorbed by built-in capacitor [J]	Average regenerative energy to be absorbed by Internal Regeneration Resistor [W]	Allowable minimum regeneration resistance [Ω]
Single and 3-phase	200 VAC	200 W	R88D-1SAN02H-ECT	19	---	25
		400 W	R88D-1SAN04H-ECT	26	---	25
		750 W	R88D-1SAN08H-ECT	46	18	20
3-phase		1 kW	R88D-1SAN10H-ECT	46	18	20
Single and 3-phase		1.5 kW	R88D-1SAN15H-ECT	60	32	14
3-phase		2 kW	R88D-1SAN20H-ECT	60	32	10
		3 kW	R88D-1SAN30H-ECT	72	32	8
	400 VAC	1 kW	R88D-1SAN10F-ECT	24	24	65
		1.5 kW	R88D-1SAN15F-ECT	49	24	54
		2 kW	R88D-1SAN20F-ECT	73	32	40
		3 kW	R88D-1SAN30F-ECT	73	32	32

The regenerative energy to be absorbed by built-in capacitor varies depending on the input voltage to the main circuit power supply for the Servo Drive. The values shown above are calculated based on the following input voltages.

Model	Main circuit power supply input voltage
R88D-1SAN□H-ECT	200 VAC
R88D-1SAN□F-ECT	400 VAC

4-4-3 Regenerative Energy Absorption by an External Regeneration Resistance Device

If the regenerative power exceeds the average regenerative power that the Internal Regeneration Resistor of the Servo Drive can absorb, connect an External Regeneration Resistance Device.

Connect the External Regeneration Resistance Device between B1 and B2 terminals on the Servo Drive.

Double-check the terminal names when you connect the resistor because the Servo Drive may be damaged if the resistor is connected to the wrong terminals.

The surface of the External Regeneration Resistance Device will heat up to approximately 200°C. Do not place it near equipment and wiring that is easily affected by heat.

External Regeneration Resistor

Refer to *3-5 Specifications of External Regeneration Resistors and External Regeneration Resistance Units* on page 3-72 for details on the specifications.

● Characteristics

External Regeneration Resistor

R88A-RR120□ and R88A-RR300□

Model	Resistance value	Power to be absorbed for 120°C temperature rise	Heat radiation specification	Heat radiation condition
R88A-RR12025	25 Ω	24 W	Natural cooling	Aluminum 350 mm × 350 mm Thickness: 3.0 mm
R88A-RR30008	8 Ω	60 W		
R88A-RR30010	10 Ω			
R88A-RR30014	14 Ω			
R88A-RR30020	20 Ω			
R88A-RR30025	25 Ω			
R88A-RR30032	32 Ω			
R88A-RR30033	33 Ω			
R88A-RR30054	54 Ω			

External Regeneration Resistance Unit

R88A-RR1K6□

Model	Resistance value	Power to be absorbed for 120°C temperature rise	Heat radiation specification
R88A-RR1K608	8 Ω	640 W	Forced cooling by the fan
R88A-RR1K610	10 Ω		
R88A-RR1K614	14 Ω		
R88A-RR1K620	20 Ω		
R88A-RR1K632	32 Ω		
R88A-RR1K640	40 Ω		
R88A-RR1K654	54 Ω		
R88A-RR1K666	66 Ω		

4-4-4 Connecting an External Regeneration Resistor

Normally, short-circuit B2 and B3.

When an External Regeneration Resistor is required, remove the short-circuit wire between B2 and B3, and connect an External Regeneration Resistor between B1 and B2 as shown below.

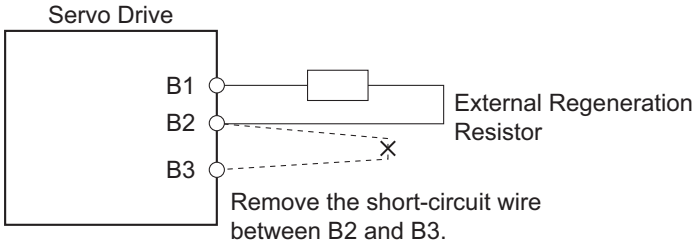

Precautions for Correct Use

In **Regeneration** (4310 hex), set a value which is appropriate for the external regeneration resistor that is connected. If you set a wrong value, the resistor may produce heat abnormally, and fire or burning may result.

4-5 Adjustment for Large Load Inertia

The applicable Servomotor load inertia is a value to prevent the Servo Drive circuits from damage during normal operation.

For the use of the Servomotor within the range of applicable load inertia, the precautions for adjustment and dynamic brake are described below.

Do not use the dynamic brake frequently for deceleration operation because the dynamic brake is intended for the stop at the time of an error.

Observe the following instructions to prevent wire breakage, smoking and ignition from occurring in the dynamic brake.

- Do not use Servo ON/OFF to start and stop the Servomotor when it is not necessary.
- Do not use an external drive source to drive the Servomotor. Do not turn ON the power supply during motor rotation.
- When the Servomotor is stopped by the dynamic brake, allow it to be in a stop state for three minutes or more before the Servo is turned ON again.

As a guide, the dynamic brake can be used 1,000 times under the following conditions:
Stopping is performed when the Servomotor rotates at the rated speed, the maximum applicable load inertia is not exceeded, and the dynamic brake is used once every three minutes.

The load applied to the dynamic brake circuit increases in proportion to the load inertia and rotation speed. An excessive load may cause a failure.

Use the following expression as a guide for determining the operating rotation speed and operating inertia.

$$\text{Operating inertia} \leq (\text{Maximum applicable inertia} + \text{Servomotor inertia}) \times \frac{\text{Rated rotation speed}^2}{\text{Operating rotation speed}^2} - \text{Servomotor inertia}$$

Refer to *7-13 Dynamic Brake* on page 7-45 for how to set the dynamic brake.

4-6 Machine Accuracy for Servomotor

The following table shows the machine accuracy (Total Indicator Reading) for the output shaft and mounting parts of the Servomotor.

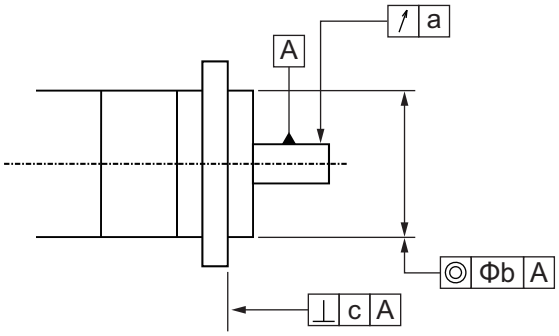

Item	Servomotor		Accuracy (mm)
Runout of output shaft end (a)	All models		0.02
Eccentricity of flange outer diameter to output shaft (b)	Flange Size	□100 or less	0.06
		□130 to □180	0.08
Squareness of flange surface to output shaft (c)	Flange Size	□80 or less	0.07
		□100 to □180	0.08

4-7 Noise Filter Installation Conditions When the Total Wire Length Is Long

This section describes how to use recommended book-type noise filters when, in a 3-phase 200-V input model of Servo Drive, an integrated cable connected to one Servo Drive is longer than 20 m or when you connect more than one 3-phase 200-V input model of Servo Drive at 1.5 kW or less to one noise filter.

Note that 1S-series products do not conform to EMC Directives when they are installed in accordance with the installation conditions described in this section.

Precautions for Safe Use

Do not use any noise filters other than the recommended products.

Selecting an unsuitable noise filter may result in a poor noise reduction effect. A Servo Drive may produce some noise that travels through the power supply cable and causes unintended operation of other Servo Drives such as regeneration operation and Overvoltage Error.

4-7-1 Noise Filters for Integrated Cables That Are Longer Than 20 Meters

When an integrated cable connected to one Servo Drive is longer than 20 m, you can use the noise filter manufactured by Soshin Electric Co., Ltd. or Cosel Co., Ltd.

For how to wire and install a noise filter, refer to *4-1-5 Noise Filter Installation Conditions* on page 4-13.

● 3-Phase 200-VAC Input Models

Applicable Servo Drive		Book-type Noise Filter			
Voltage	Model	Model	Rated current	Leakage current	Manufacturer
3-Phase 200 VAC	R88D-1SAN0□H-ECT R88D-1SAN10H-ECT R88D-1SAN15H-ECT	FSB-30-254-HU*1	30 Arms	12 mA max. (at 250 VAC, 60 Hz, △ connection and single-phase ground)	Cosel Co., Ltd.
	R88D-1SAN15H-ECT R88D-1SAN20H-ECT R88D-1SAN30H-ECT	HF3020C-SZL*2	20 Arms	7.7 mA max. (at 200 VAC, 60 Hz, △ connection and single-phase ground)	Soshin Electric Co., Ltd.

*1. Consult Cosel Co., Ltd.

*2. Consult Soshin Electric Co., Ltd.

4-7-2 Noise Filter to Connect to More Than One Servo Drive

For the noise filter manufactured by Cosel Co., Ltd., more than one 3-phase 200-V input model of Servo Drive at 1.5 kW or less can be connected to one noise filter.

The total wire length of motor power cables that you can connect to one noise filter changes depending on the version of the motor power cables. Check the version of the motor power cables that you use and consider the corresponding total wire length when you select.

Installing a Noise Filter to Connect to More Than One Servo Drive

Depending on the combination of Servo Drives connected to one noise filter, the total wire length of connectable motor power cables varies.

Referring to Installation Conditions of Noise Filter to Connect to More Than One Servo Drive in the following table, perform the following procedure to decide on the Servo Drives connected to one noise filter.

1 Check that the total rated input current from the Servo Drives connected to one noise filter is equal to or less than the rated current of the noise filter.

Rated current of noise filter ≥ Total rated input current from Servo Drives

2 Check that the total wire length of motor power cables of the Servo Drives connected to one noise filter is equal to or less than the maximum total wire length of motor power cables for each noise filter.

Maximum total wire length of motor power cables for each noise filter ≥ Total wire length of motor power cables

● Installation Conditions of Noise Filter to Connect to More Than One Servo Drive

Applicable Servo Drive group*1			Book-type Noise Filter				Maximum total wire length of motor power cables for each noise filter*2	
Group	Voltage	Details on group and applicable model	Model	Rated current	Leakage current	Manu-facturer	Cable version	
							Ver.1.0	Ver.1.1
1	3-phase 200 VAC	Servo Drives at 750 W or less R88D-1SN01H-ECT R88D-1S(A)N02H-ECT R88D-1S(A)N04H-ECT R88D-1S(A)N08H-ECT	FSB-30-254-HU*3	30 Arms*4	12 mA max. (at 250 VAC, 60 Hz, △ connection and single-phase ground)	Cosel Co., Ltd.	60 m	130 m
2		Servo Drives at 1 kW or less Models of group 1 and R88D-1S(A)N10H-ECT					50 m	120 m
3		Servo Drives at 1.5 W or less Models of group 2 and R88D-1S(A)N15H-ECT					50 m	90 m

*1. You can connect more than one Servo Drive to one noise filter even when you use a configuration that consists of 1S-series products (R88D-1SN□) and 1S-series products Advance Type if you satisfy the conditions.

*2. Some models of the 1S-series products (R88D-1SN□) support two types of cable: version 1.0 and version 1.1. The version of integrated cables of the 1S-series products Advance Type is 1.1.
Conditions for cable version 1.0 are applied to configurations that consist of version 1.0 and version 1.1 cables.

*3. Consult Cosel Co., Ltd.

*4. If the ambient temperature of the noise filter exceeds 50°C, reduce the rated current of the noise filter according to the following derating characteristics.
When the ambient temperature of the noise filter is 70°C, the rated current of the noise filter becomes 30 Arms × 0.7 = 21 Arms.

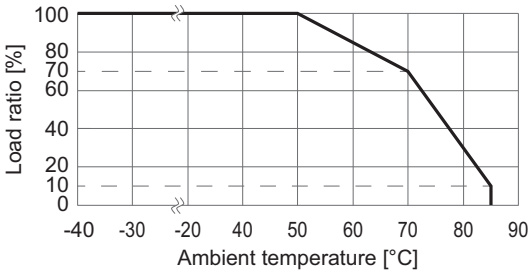

Do not block up an air hole for heat radiation in the cabinet.

● Rated Input Current from Servo Drives

Servo Drive model	Rated input current [A (rms)] (Main circuit power supply voltage: 3-phase 240 VAC)
R88D-1SAN02H-ECT	1.5
R88D-1SAN04H-ECT	2.7
R88D-1SAN08H-ECT	4.0
R88D-1SAN10H-ECT	5.8
R88D-1SAN15H-ECT	9.0

● Example of Installing a Noise Filter to Connect to More Than One Servo Drive

The following gives an example of selecting noise filters when you use the following seven Servo Drives and power cables. This example is for cable version 1.0.

Servo Drive				Motor power cable length
No.	Model	Rated input current	Applicable Servo Drive group	
1	R88D-1SN01H-ECT	1.0 Arms	1 (750 W max.)	20 m
2	R88D-1SN01H-ECT	1.0 Arms	1 (750 W max.)	10 m
3	R88D-1S(A)N02H-ECT	1.5 Arms	1 (750 W max.)	20 m
4	R88D-1S(A)N02H-ECT	1.5 Arms	1 (750 W max.)	5 m
5	R88D-1S(A)N08H-ECT	4.0 Arms	1 (750 W max.)	20 m
6	R88D-1S(A)N10H-ECT	5.8 Arms	2 (1 kW max.)	20 m
7	R88D-1S(A)N15H-ECT	9.0 Arms	3 (1.5 kW max.)	30 m
Total		23.8 Arms	---	125 m

1 Check that the total rated input current from the Servo Drives connected to one noise filter is equal to or less than the rated current of the noise filter.

The total rated input current from No.1 to No.7 Servo Drives is calculated as 23.8 Arms. Since the rated current of the noise filter is 30 Arms or less, you can connect all the seven Servo Drives to one noise filter.

Rated current of noise filter: 30 Arms ≥ Total rated input current from seven Servo Drives: 23.8 Arms

2 Check that the total wire length of motor power cables of the Servo Drives connected to one noise filter is equal to or less than the maximum total wire length of motor power cables for each noise filter.

The total wire length of motor power cables connected to No.1 to No.7 Servo Drives is calculated as 125 m. Installation of these Servo Drives to one noise filter applies to the applicable Servo Drive group 3 (1.5 kW max.). Since it exceeds the maximum total wire length of motor power cables for each noise filter in the applicable Servo Drive group 3 (1.5 kW max.): 50 m, you cannot connect all the seven Servo Drives to one noise filter.

Maximum total wire length of motor power cables in applicable Servo Drive group 3 (1.5 kW max.): 50 m ≤ Total wire length of motor power cables connected to seven Servo Drives: 125 m

Therefore, it is necessary to connect the seven Servo Drives separately to multiple noise filters, so that each of the lengths may not exceed the maximum total wire length of motor power cables for each noise filter. Perform the following procedure, starting with a group smaller in rated input current, to calculate the total wire length of motor power cables connected to Servo Drives and decide on the Servo Drives connected to one noise filter.

(1) Selecting Servo Drives Connected to the First Noise Filter

No.1 to No.4 Servo Drives apply to the applicable Servo Drive group 1 (750 W max.). The total wire length of motor power cables connected to these Servo Drives is calculated as 55 m.

Since it is not more than the maximum total wire length of motor power cables for each noise filter in the applicable Servo Drive group 1 (750 W max.): 60 m, you can connect No.1 to No.4 Servo Drives to one noise filter.

Maximum total wire length of motor power cables in applicable Servo Drive group 1 (750 W max.): 60 m ≥ Total wire length of motor power cables connected to No.1 to No.4 Servo Drives: 55 m

(2) Selecting Servo Drives Connected to the Second Noise Filter

No.5 to No.6 Servo Drives apply to the applicable Servo Drive group 2 (1 kW max.). The total wire length of motor power cables connected to these Servo Drives is calculated as 40 m.

Since it is not more than the maximum total wire length of motor power cables for each noise filter in the applicable Servo Drive group 2 (1 kW max.): 50 m, you can connect No.5 to No.6 Servo Drives to one noise filter.

Maximum total wire length of motor power cables in applicable Servo Drive group 2 (1 kW max.): 50 m ≥ Total wire length of motor power cables connected to No.5 to No.6 Servo Drives: 40 m

(3) Selecting a Servo Drive Connected to the Third Noise Filter

Select a noise filter for the remaining No.7 Servo Drive. Since the No.7 Servo Drive is 1.5 kW and a motor power cable connected is 30 m, you can use HF3020C-SZL manufactured by Soshin Electric Co., Ltd. or FSB-30-254-HU manufactured by Cosel Co., Ltd.

In this case, you need three noise filters. The following tables show the selection results.

- Noise Filter to Connect to More Than One Servo Drive

Servo Drive	Applicable Servo Drive group	Total wire length of motor power cables	Maximum total wire length of motor power cables for each noise filter*1
No.1 to 4	Group 1	55 m	60 m

Servo Drive	Applicable Servo Drive group	Total wire length of motor power cables	Maximum total wire length of motor power cables for each noise filter*1
Nos.5 and 6	Group 2	40 m	50 m

*1. This is the upper limit when cable version 1.0 is used.

- Noise Filters for Motor Power Cables That Are Longer Than 20 Meters

Servo Drive	Noise filter	Wire length of motor power cables
No.7	HF3020C-SZL	30 m
	FSB-30-254-HU	

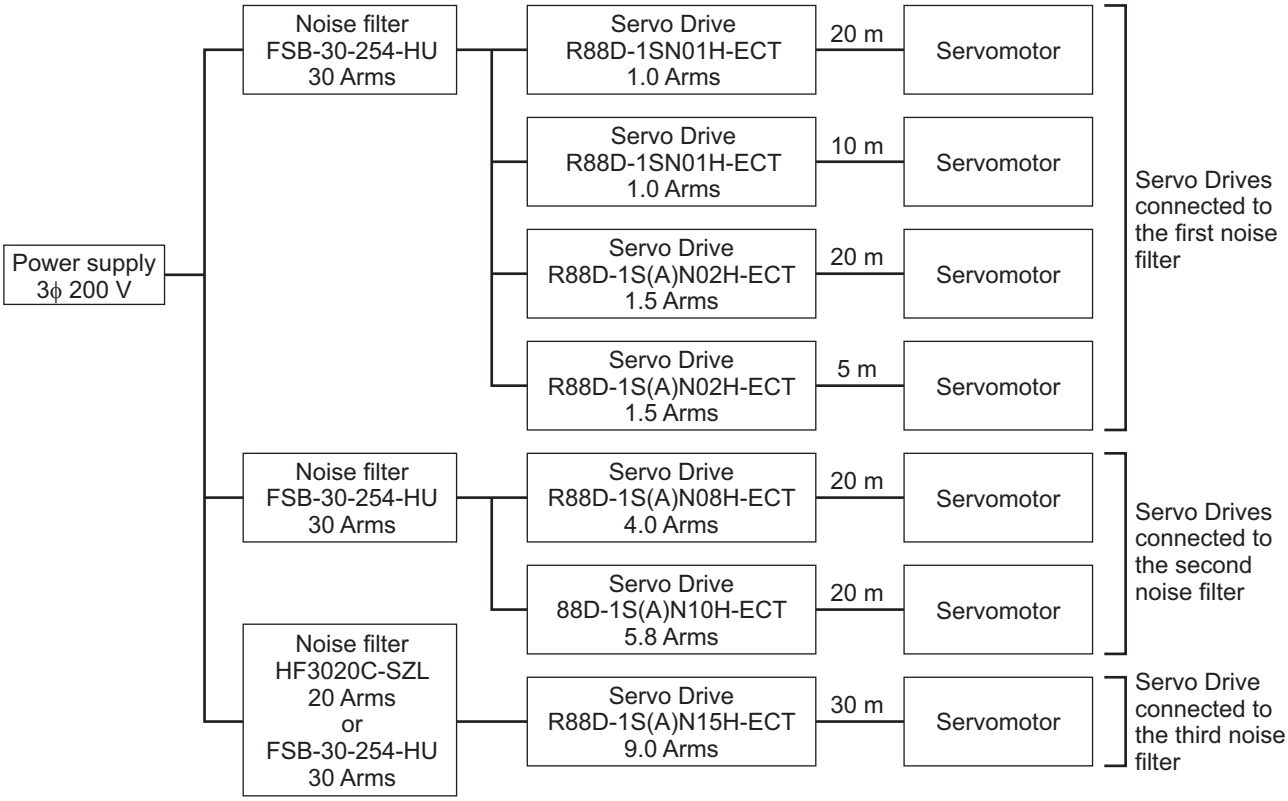

Wiring a Noise Filter to Connect to More Than One Servo Drive

This section describes the wiring procedure when you install more than one Servo Drive to one noise filter. For how to wire and install a noise filter, refer to *4-1-5 Noise Filter Installation Conditions* on page 4-13.

- To relay a noise filter and Servo Drives, use the terminal blocks with a rated voltage of 250 V or more and a rated current of 30 A or more. To tighten two wires together, use such a terminal block as you can do so.
- Ensure that the size of wires used between the power supply and the noise filter and the size of wires used between the noise filter and the relay terminal blocks are thick enough to pass at least the total rated input current from the multiple Servo Drives connected to one noise filter. Wiring between the noise filter and the Servo Drives should be as short as possible.
- Install fuses or molded case circuit breakers between the noise filter and each Servo Drive to protect the Servo Drives.
- To ensure safety, install fuses or a molded case circuit breaker whose rated current is equal to or more than the rated current of the noise filter on the input side of the noise filter.
- Be sure to install a surge absorber on the power supply input (LINE) side of each noise filter.

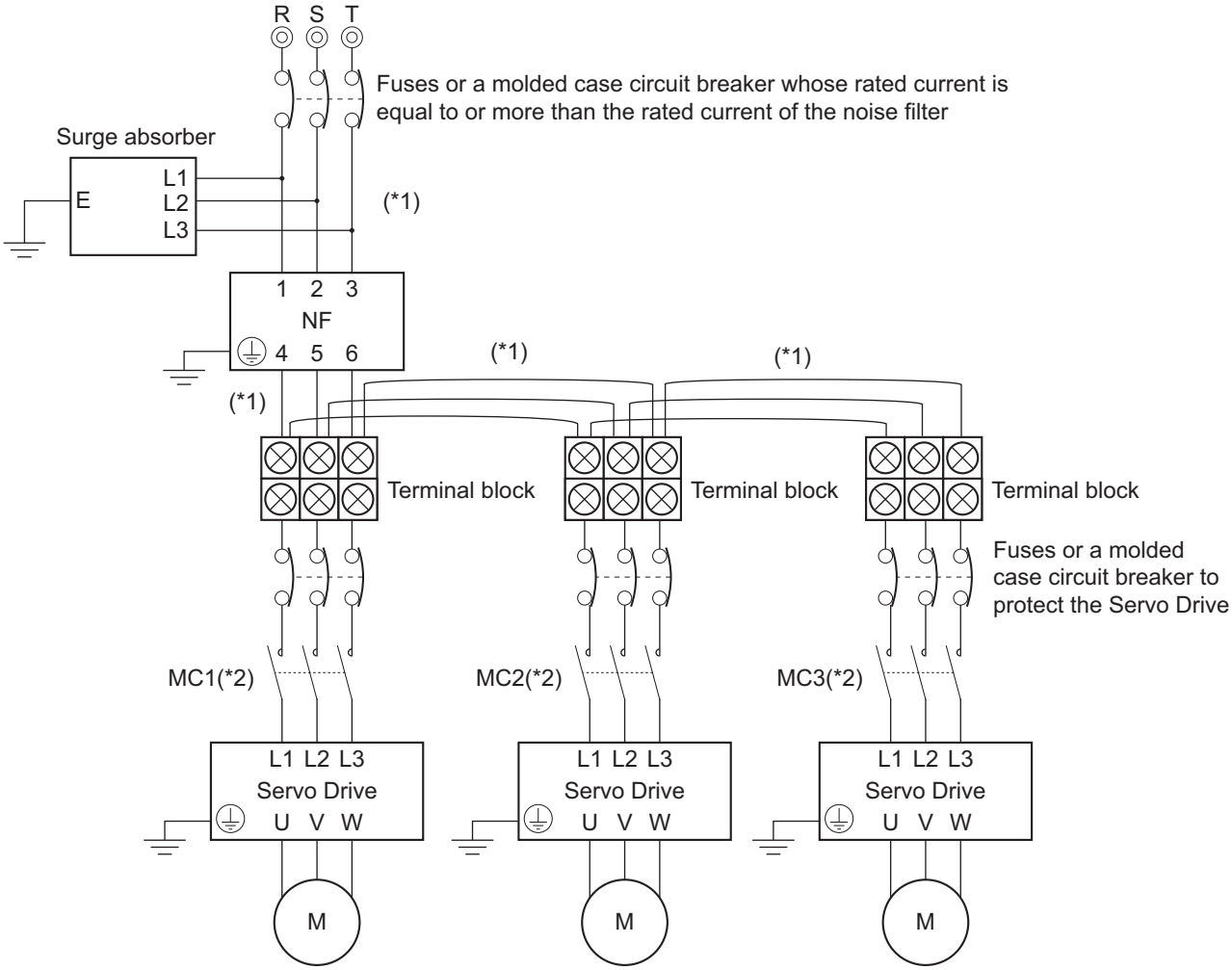

*1. Ensure that the size of wires used for the input side of the noise filter and the size of wires used between the noise filter and the relay terminal blocks are thick enough to pass at least the rated current of the noise filter.

*2. Wire a contactor so that the main circuit power supply will be cut off when the ERR signal (normally close contact) of the control output function is output (open). Refer to *4-2-1 Peripheral Equipment Connection Examples* on page 4-16 for details on wiring.

Precautions for Safe Use

- Check that the total rated input current from the Servo Drives is equal to or less than the rated current of the noise filter. Burning or failure may result.
- When you connect more than one Servo Drive to one noise filter, be sure to use relay terminal blocks for connecting the noise filter and the Servo Drives, without tightening the terminals together on the noise filter terminal block. Burning or failure may result.
- Select such relay terminal blocks as you can tighten terminals together. It is up to two terminals that should be tightened together. Burning or failure may result.

WARNING

When you connect more than one Servo Drive to one noise filter, ensure that the size of wires used for the input side of the noise filter and the size of wires used between the noise filter and the relay terminal blocks are thick enough to pass at least the rated current of the noise filter.

Not doing so may cause a fire or electric shock.

5

EtherCAT Communications

This section explains EtherCAT communications under the assumption that the Servo Drive is connected to a Machine Automation Controller NJ/NX-series CPU Unit, NY-series IPC Machine Controller, or Position Control Unit (Model: CJ1W-NC□8□).

5-1 Display Area and Settings 5-2
- 5-1-1 Node Address Setting 5-2
- 5-1-2 Status Indicators 5-3

5-2 Structure of the CAN Application Protocol over EtherCAT 5-5

5-3 EtherCAT State Machine 5-6

5-4 Process Data Objects (PDOs) 5-7
- 5-4-1 PDO Mapping Settings 5-7
- 5-4-2 Sync Manager PDO Assignment Settings 5-8
- 5-4-3 Fixed PDO Mapping 5-8
- 5-4-4 Variable PDO Mapping 5-11
- 5-4-5 Safety PDO Mapping 5-12
- 5-4-6 Sync Manager PDO Mapping Assignment Settings 5-14

5-5 Service Data Objects (SDOs) 5-15

5-6 Synchronization Mode and Communications Cycle 5-16
- 5-6-1 Distributed Clock (DC) Mode 5-16
- 5-6-2 Free-Run Mode 5-16

5-7 Emergency Messages 5-17

5-8 Sysmac Device Features 5-18

5-9 Cable Redundancy Function 5-22
- 5-9-1 Objects Requiring Settings 5-22
- 5-9-2 Description of Operation 5-22
- 5-9-3 Procedure of Checking Operation 5-23
- 5-9-4 Slave Communications Statuses When Cable Redundancy Function Is Used 5-25
- 5-9-5 Relation between the Network Configuration Information and the Actual Configuration 5-26

5-1 Display Area and Settings

This section explains the indicators and switches located on the front of the Serve Drive.

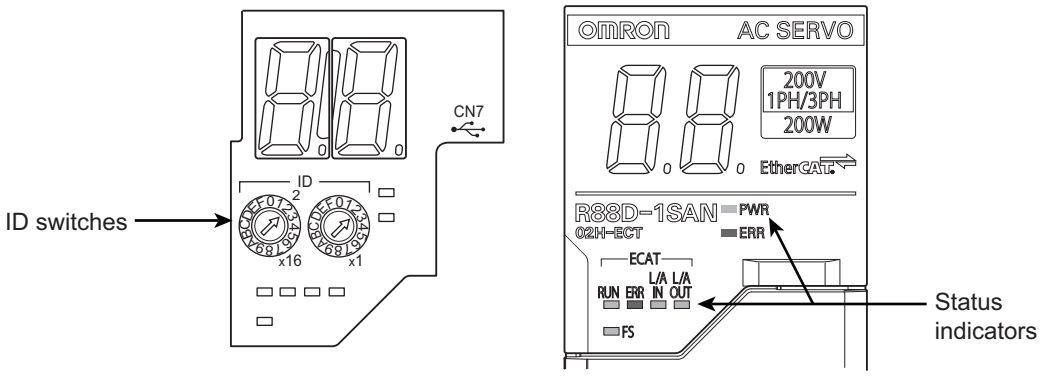

5-1-1 Node Address Setting

Use the ID switches located in the display area to set the EtherCAT node address.

ID switch setting	Description
	Connection to NJ/NX-series CPU Unit, NY-series IPC Machine Controller, or Position Control Unit (CJ1W-NC□8□)
00	The controller sets the node address.
01 to FF	The ID switches set the node address.

Precautions for Correct Use

The ID switch setting is read only once when the Unit power supply is turned ON. Although the setting is changed after the Unit power supply is ON, it is not reflected in the control. It is enabled the next time the Unit power supply is turned ON.

Additional Information

EtherCAT Slave Information File

Information on EtherCAT slave settings is stored in the ESI (EtherCAT Slave Information) file. The master uses the information in this file to configure the network and set communications parameters. This information is in an XML file.

5-1-2 Status Indicators

The following table shows the status indicators and their meaning.

Name	Function	Color	Status	Description
PWR	Displays the status of control power supply.	Green	OFF	Control power supply OFF
			ON	Control power supply ON
ERR	Displays Unit error status.	Red	OFF	No error
			ON	Error detected
			Flashing	A warning occurred
ECAT-RUN	Displays the status of ESM.	Green	OFF	Init state or power OFF state
			Blinking	Pre-Operational state
			Single flash	Safe-Operational state
			ON	Operational state
ECAT-ERR	Displays EtherCAT communications error status.	Red	OFF	No error
			Blinking	Communications setting error
			Single flash	Synchronization error or communications data error
			Double flash	Application WDT timeout (Sync Manager WDT Error)
			ON	A fatal error such as WDT timeout
L/A IN	Displays link status in EtherCAT physical layer.	Green	OFF	Link not established in physical layer
			ON	Link established in physical layer
			Flickering	In operation after link was established
L/A OUT	Displays link status in EtherCAT physical layer.	Green	OFF	Link not established in physical layer
			ON	Link established in physical layer
			Flickering	In operation after link was established
FS	Displays FSoE communications status.	Green	ON	FSoE slave connection established
			Flashing	FSoE slave connection establishment in progress
		Red	Flashing	Safety Parameter Error, Safety Communications Timeout, or other errors
		---	OFF	The safety functions are disabled by FSoE, the power is not supplied, or a fatal error including Self-diagnosis Error

See the following diagram for the status of the indicators.

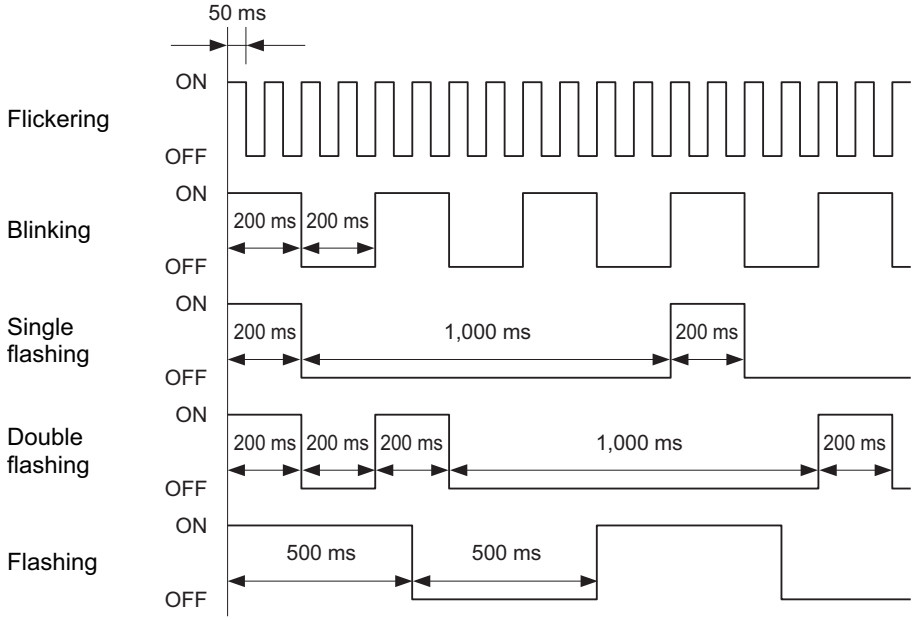

5-2 Structure of the CAN Application Protocol over EtherCAT

This section explains the structure of the CAN application protocol over EtherCAT (CoE) for a 1S-series Servo Drive Advance Type with built-in EtherCAT communications.

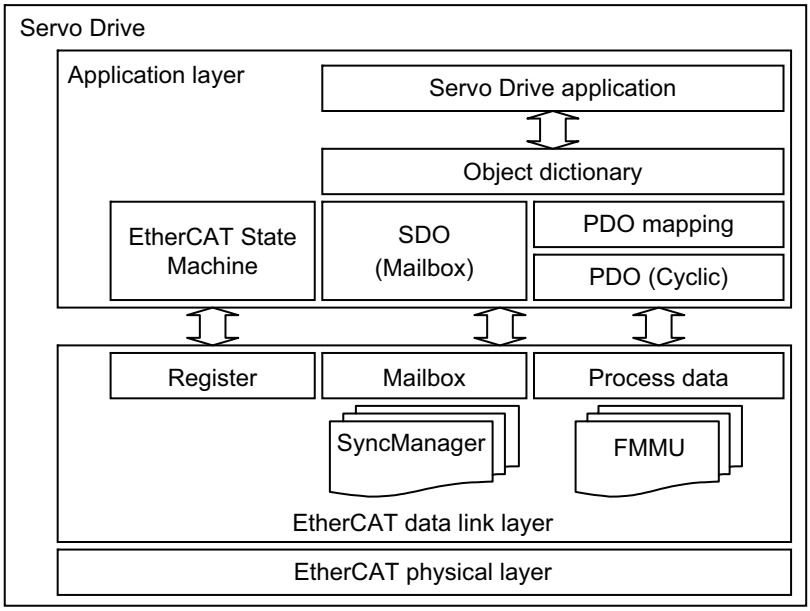

Normally, EtherCAT can transmit different protocols. 1S-series Servo Drives Advance Type with Built-in EtherCAT Communications use the IEC 61800-7 (CiA 402) drive profile.

The object dictionary in the application layer contains parameters and application data as well as information on the PDO mapping between the process data servo interface and Servo Drive application.

The process data object (PDO) consists of the object dictionary that can be used for PDO mapping. The contents of the process data are defined by the PDO mapping.

Process data communications cyclically reads and writes the PDO. Mailbox communications (SDO) uses asynchronous message communications where all objects in the object dictionary can be read and written.

5-3 EtherCAT State Machine

The EtherCAT State Machine (ESM) of the EtherCAT slave is controlled by the EtherCAT master.

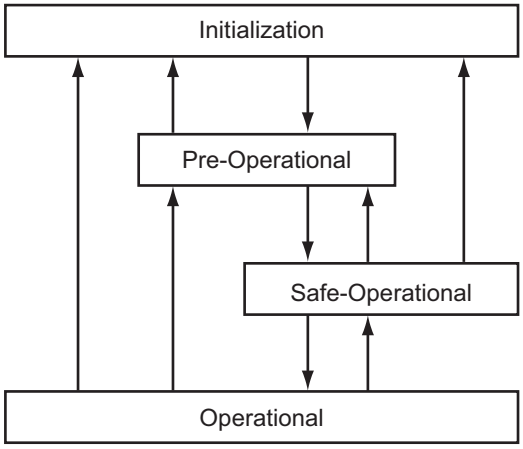

State	SDO communications	PDO reception	PDO transmission	Description
Init	Not possible	Not possible	Not possible	Communication initialization is in progress. Communications are not possible.
Pre-Operational	Possible	Not possible	Not possible	Only SDO communications are possible in this state. This state is entered after initialization is completed. In this state, the network settings are initialized.
Safe-Operational	Possible	Not possible	Possible	In this state, PDO transmissions are possible in addition to SDO communications. PDO transmissions can be used to send information such as status from the Servo Drive.
Operational	Possible	Possible	Possible	This is a normal operating state. PDO communications can be used to control the Servomotor.

Note The Bootstrap mode is not supported.

5-4 Process Data Objects (PDOs)

The process data objects (PDOs) are used for real-time data transfer during cyclic communications. PDOs can be RxPDOs, which receive data from the controller, or TxPDOs, which send status from the Servo Drive to the host controller.

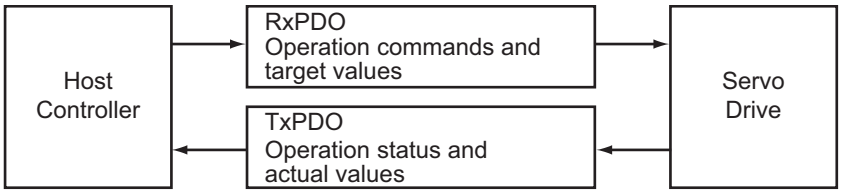

The EtherCAT application layer can hold multiple objects to enable transferring Servo Drive process data. The contents of the process data are described in the PDO mapping objects and the Sync Manager PDO Assignment objects.

5-4-1 PDO Mapping Settings

The PDO mapping objects provide mapping for the application objects (real-time process data) between the object dictionary and PDOs.

The number of mapped objects is shown in subindex 00 hex in the mapping table. In this mapping table, 1600 to 17FF hex are for RxPDOs and 1A00 to 1BFF hex are for TxPDOs.

1S-series Servo Drives Advance Type use 1600 hex, 1610 hex, and 1701 to 1705 hex for an RxPDO, and 1A00 hex, 1A10 hex, and 1B01 to 1B04 hex, 1B20 hex, and 1BFF hex for a TxPDO.

The following table is an example of PDO mapping.

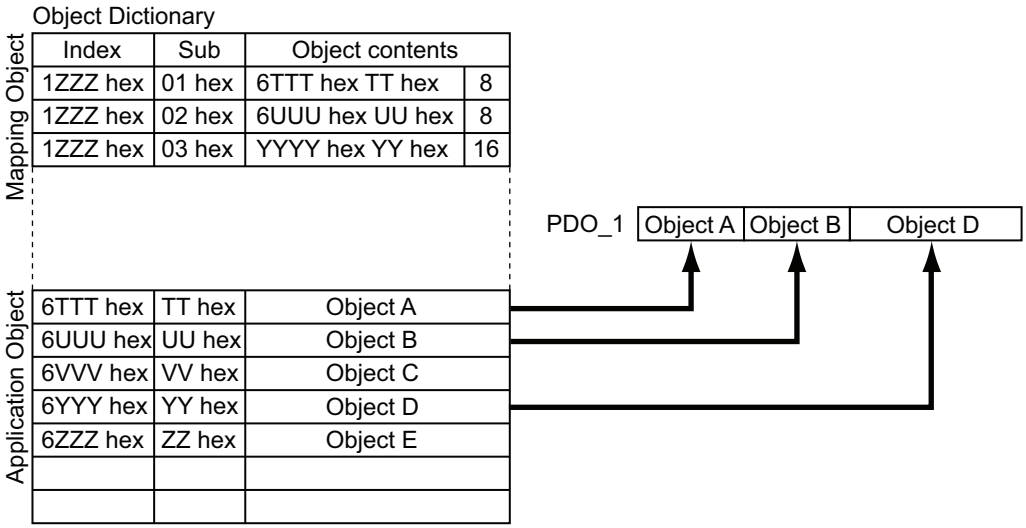

5-4-2 Sync Manager PDO Assignment Settings

A Sync Manager channel consists of several PDOs. The Sync Manager PDO Assignment objects describe relationships between these PDOs and the Sync Manager.

The number of PDOs is shown in subindex 00 hex in the Sync Manager PDO Assignment table. 1S-series Servo Drives Advance Type use 1C12 hex for an RxPDO, and 1C13 hex for a TxPDO.

The following table is an example of Sync Manager PDO mapping.

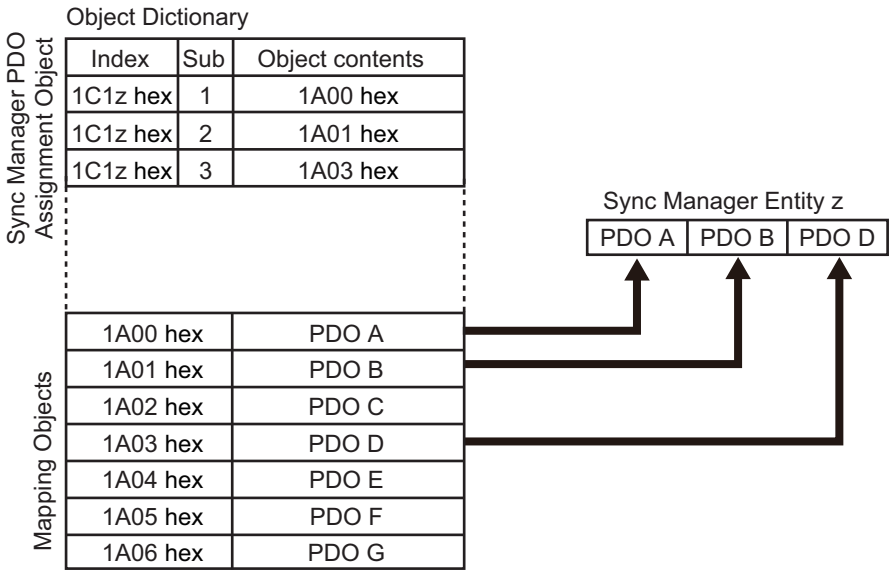

5-4-3 Fixed PDO Mapping

This section describes the contents of fixed PDO mapping for 1S-series Servo Drives Advance Type. You cannot change these contents.

Use **Sync Manager 2 PDO Assignment** (1C12 hex) and **Sync Manager 3 PDO Assignment** (1C13 hex) to specify the PDO mapping you use.

Some typical examples of RxPDO and TxPDO combinations are provided below.

PDO Mapping 1 (Position Control and Touch Probe Function)

This is the mapping for an application that uses only the Cyclic synchronous position mode (csp).

The touch probe function is available.

RxPDO: [258th receive PDO Mapping] (1701 hex)	Controlword (6040 hex), Target position (607A hex), Touch probe function (60B8 hex), and Physical outputs (60FE-01 hex)
TxPDO: [258th transmit PDO Mapping] (1B01 hex)	Error code (603F hex), Statusword (6041 hex), Position actual value (6064 hex), Torque actual value (6077 hex), Following error actual value (60F4 hex), Touch probe status (60B9 hex), Touch probe 1 positive edge (60BA hex), Touch probe 2 positive edge (60BC hex), and Digital inputs (60FD hex)

PDO Mapping 2 (Position Control, Velocity Control, Torque Control, and Touch Probe Function)

This is the mapping for an application that uses one of the following modes with switching them: Cyclic synchronous position mode (csp), Cyclic synchronous velocity mode, and Cyclic synchronous torque mode.

The touch probe function is available.

RxPDO: [259th receive PDO Mapping] (1702 hex)	Controlword (6040 hex), Target position (607A hex), Target velocity (60FF hex), Target torque (6071 hex), Modes of operation (6060 hex), Touch probe function (60B8 hex), and Max profile velocity (607F hex)
TxPDO: [259th transmit PDO Mapping] (1B02 hex)	Error code (603F hex), Statusword (6041 hex), Position actual value (6064 hex), Torque actual value (6077 hex), Modes of operation display (6061 hex), Touch probe status (60B9 hex), Touch probe 1 positive edge (60BA hex), Touch probe 2 positive edge (60BC hex), and Digital inputs (60FD hex)

PDO Mapping 3 (Position Control, Velocity Control, Touch Probe Function, and Torque Limit)

This is the mapping for an application that uses one of the following modes with switching them: Cyclic synchronous position mode (csp) and Cyclic synchronous velocity mode.

The touch probe function and torque limit are available.

RxPDO: [260th receive PDO Mapping] (1703 hex)	Controlword (6040 hex), Target position (607A hex), Target velocity (60FF hex), Modes of operation (6060 hex), Touch probe function (60B8 hex), Positive torque limit value (60E0 hex), and Negative torque limit value (60E1 hex)
TxPDO: [260th transmit PDO Mapping] (1B03 hex)	Error code (603F hex), Statusword (6041 hex), Position actual value (6064 hex), Torque actual value (6077 hex), Following error actual value (60F4 hex), Modes of operation display (6061 hex), Touch probe status (60B9 hex), Touch probe 1 positive edge (60BA hex), Touch probe 2 positive edge (60BC hex), and Digital inputs (60FD hex)

PDO Mapping 4 (Position Control, Velocity Control, Torque Control, Touch Probe Function, and Torque Limit)

This is the mapping for an application that uses one of the following modes with switching them: Cyclic synchronous position mode (csp), Cyclic synchronous velocity mode, and Cyclic synchronous torque mode.

The touch probe function and torque limit are available.

RxPDO: [261th receive PDO Mapping] (1704 hex)	Controlword (6040 hex), Target position (607A hex), Target velocity (60FF hex), Target torque (6071 hex), Modes of operation (6060 hex), Touch probe function (60B8 hex), Max profile velocity (607F hex), Positive torque limit value (60E0 hex), and Negative torque limit value (60E1 hex)
TxPDO: [259th transmit PDO Mapping] (1B02 hex)	Error code (603F hex), Statusword (6041 hex), Position actual value (6064 hex), Torque actual value (6077 hex), Modes of operation display (6061 hex), Touch probe status (60B9 hex), Touch probe 1 positive edge (60BA hex), Touch probe 2 positive edge (60BC hex), and Digital inputs (60FD hex)

PDO Mapping 5 (Position Control, Velocity Control, Touch Probe Function, Torque Limit, and Torque Feed-forward)

This is the mapping for an application that uses one of the following modes with switching them: Cyclic synchronous position mode (csp) and Cyclic synchronous velocity mode.

The touch probe function and torque limit are available.

You can specify the amount of torque feed-forward in the **Torque offset** (60B2 hex).

RxPDO: [262th receive PDO Mapping] (1705 hex)	Controlword (6040 hex), Target position (607A hex), Target velocity (60FF hex), Modes of operation (6060 hex), Touch probe function (60B8 hex), Positive torque limit value (60E0 hex), Negative torque limit value (60E1 hex), and Torque offset (60B2 hex)
TxPDO: [261th transmit PDO Mapping] (1B04 hex)	Error code (603F hex), Statusword (6041 hex), Position actual value (6064 hex), Torque actual value (6077 hex), Modes of operation display (6061 hex), Touch probe status (60B9 hex), Touch probe 1 positive edge (60BA hex), Touch probe 2 positive edge (60BC hex), Digital inputs (60FD hex), and Velocity actual value (606C hex)

5-4-4 Variable PDO Mapping

1S-series Servo Drives Advance Type allow you to change some mapped objects.

The PDO mapping objects for which you can change the setting are the **1st receive PDO Mapping** (1600 hex) and the **1st transmit PDO Mapping** (1A00 hex).

These objects can be changed only when the EtherCAT communications state is Pre-Operational. Since the mapping you changed is not saved in non-volatile memory, set the EtherCAT master so that the settings can be configured each time you turn ON the power supply in order to use the mapping other than the default setting.

Default Setting

RxPDO: [1st receive PDO Mapping] (1600 hex)	Controlword (6040 hex), Target position (607A hex), and Touch probe function (60B8 hex)
TxPDO: [1st transmit PDO Mapping] (1A00 hex)	Error code (603F hex), Statusword (6041 hex), Position actual value (6064 hex), Touch probe status (60B9 hex), Touch probe 1 positive edge (60BA hex), Touch probe 2 positive edge (60BC hex), Digital inputs (60FD hex)

Maximum Number of Objects and Maximum Total Size Allowed in a PDO Mapping

PDO mapping object	Max. number of objects		Max. total size of objects
	Communications cycle: 125 µs	Communications cycle: 250 µs or more	
RxPDO: [1st receive PDO Mapping] (1600 hex)	6	10	32 bytes
TxPDO: [1st transmit PDO Mapping] (1A00 hex)	6	10	42 bytes

Precautions for Correct Use

For information on the objects you can map, refer to *A-2-5 PDO Mapping Objects* on page A-19.

5-4-5 Safety PDO Mapping

When you use safety functions in Servo Drive, use the following safety PDO mapping. Objects fixed for safety functions are assigned. In addition, objects according to safety function for use can be assigned.

PDO mapping object		Assigned object	Settable or not: Size
RxPDO: [17th Receive PDO Mapping] (1610 hex)	01 hex	FSoE Master CMD (E700-01 hex)	Fixed: 1 byte
	02 hex	STO command (6640-00 hex)	Fixed: 1 bit
	03 hex	SS1 command 1 (6650-01 hex)	Fixed: 1 bit
	04 hex	SS2 command 1 (6670-01 hex)	Fixed: 1 bit
	05 hex	SOS command 1 (6668-01 hex)	Fixed: 1 bit
	06 hex	Reserved	Fixed: 1 bit
	07 hex	SDI positive direction command (66D0-00 hex)	Fixed: 1 bit
	08 hex	SDI negative direction command (66D1-00 hex)	Fixed: 1 bit
	09 hex	error acknowledge (6632-00 hex)	Fixed: 1 bit
	0A hex	Any object	Selectable: 1 bit
	to	Any object	Selectable: 1 bit
	11 hex	Any object	Selectable: 1 bit
	12 hex	FSoE Master CRC_0 (E700-03 hex)	Fixed: 2 bytes
	13 hex	FSoE Master Conn_ID (E700-02 hex)	Fixed: 2 bytes

PDO mapping object		Assigned object	Settable or not: Size
TxPDO: [17th transmit PDO Mapping] (1A10 hex)	01 hex	FSoE Slave CMD (E600-01 hex)	Fixed: 1 byte
	02 hex	STO command (Status) (6640-00 hex)	Fixed: 1 bit
	03 hex	Reserved	Fixed: 1 bit
	04 hex	Reserved	Fixed: 1 bit
	05 hex	SOS command 1 (Status) (6668-01 hex)	Fixed: 1 bit
	06 hex	Reserved	Fixed: 1 bit
	07 hex	SDI positive direction command (Status) (66D0-00 hex)	Fixed: 1 bit
	08 hex	SDI negative direction command (Status) (66D1-00 hex)	Fixed: 1 bit
	09 hex	error acknowledge (Status) (6632-00 hex)	Fixed: 1 bit
	0A hex	Any object	Selectable: 1 bit
	to	Any object	Selectable: 1 bit
	10 hex	Any object	Selectable: 1 bit
	11 hex	Safety Connection Status (E601-01 hex)	Fixed: 1 bit
	12 hex	FSoE Slave CRC_0 (E600-03 hex)	Fixed: 2 bytes
	13 hex	FSoE Slave Conn_ID (E600-02 hex)	Fixed: 2 bytes

Following objects of safety functions can be assigned to the safety PDO mapping optionally.

Safety Function	Objects that can be mapped
SS1	SS1 command 2 (6650-02 hex) to SS1 command 8 (6650-08 hex)
SS2	SS2 command 2 (6670-02 hex) to SS2 command 8 (6670-08 hex)
SOS	SOS command 2 (6668-02 hex) to SOS command 8 (6668-08 hex)
SLS	SLS command 1 (6690-01 hex) to SLS command 8 (6690-08 hex)
SLP	SLP command 1 (66A0-01 hex) to SLP command 8 (66A0-08 hex)
SBC	SBC command 1 (6660-01 hex)

Default Setting

RxPDO: [17th receive PDO Mapping] (1610 hex)	FSoE Master CMD (E700-01 hex), STO command (6640-00 hex), SS1 command 1 (6650-01 hex), SS2 command 1 (6670-01 hex), SOS command 1 (6668-01 hex), SDI positive direction command (66D0-00 hex), SDI negative direction command (66D1-00 hex), error acknowledge (6632-00 hex), FSoE Master CRC_0 (E700-03 hex), and FSoE Master Conn_ID (E700-02 hex)
TxPDO: [17th transmit PDO Mapping] (1A10 hex)	FSoE Slave CMD (E600-01 hex), STO command (6640-00 hex), SOS command 1 (6668-01 hex), SDI positive direction command (66D0-00 hex), SDI negative direction command (66D1-00 hex), error acknowledge (6632-00 hex), Safety Connection Status (E601-01 hex), FSoE Slave CRC_0 (E600-03 hex) and FSoE Slave Conn_ID (E600-02 hex)

5-4-6 Sync Manager PDO Mapping Assignment Settings

1S-series Servo Drives Advance Type use **Sync Manager 2 to 3 PDO Assignment**.

You can assign PDO mapping objects to each Sync Manager as shown in the following table.

Sync Manager	Assigned object	Supported PDO	Assigned PDO mapping object	Max. No. of assigned objects
Sync Manager 2	1C12 hex	RxPDO	1600 hex, 1610 hex, and 1701 to 1705 hex	3*1
Sync Manager 3	1C13 hex	TxPDO	1A00 hex, 1A10 hex, 1B01 to 1B04 hex, 1B20 hex, and 1BFF hex	4*2

*1. The maximum object size assigned to **Sync Manager 2 PDO Assignment** is 32 bytes.

*2. The maximum object size assigned to **Sync Manager 3 PDO Assignment** is 42 bytes.

Objects are mapped in the order of subindex setting 01 hex, 02 hex, 03 hex, and 04 hex.

These objects can be changed only when the EtherCAT communications state is Pre-Operational. Since the mapping you changed is not saved in non-volatile memory, set the EtherCAT master so that the settings can be configured each time you turn ON the power supply in order to use the mapping other than the default setting.

Default Setting

Sync Manager 2 (1C12 hex)	1701 hex, 1610 hex
Sync Manager 3 (1C13 hex)	1B01 hex, 1B20 hex, 1A10 hex

Precautions for Correct Use

- If mapped objects exceed the maximum total size, the RxPDO Setting Error (Error No.90.05) or TxPDO Setting Error (Error No.90.06) occurs.
- If the same object is mapped in an RxPDO more than once, the value of the last object is used.
- If the same object is mapped in a TxPDO more than once, the values of the all objects are updated.

5-5 Service Data Objects (SDOs)

1S-series Servo Drives Advance Type support SDO communications. SDO communications are used for setting objects and monitoring the status of Servo Drives. The host controller performs object setting and status monitoring by reading and writing data to entries in the object dictionary.

The following table lists the abort codes for when an SDO communications error occurs.

Code (hex)	Meaning
05030000	Toggle bit not changed
05040000	SDO protocol timeout
05040001	Client/Server command specifier not valid or unknown
05040005	Out of memory
06010000	Unsupported access to an object
06010001	Attempt to read to a write only object
06010002	Attempt to write to a read only object
06010003	Subindex cannot be written, SI0 must be 0 for write access
06020000	The object does not exist in the object directory
06040041	The object can not be mapped into the PDO
06040042	The number and length of the objects to be mapped would exceed the PDO length
06040043	General parameter incompatibility reason
06040047	General internal incompatibility in the device
06060000	Access failed due to a hardware error
06070010	Data type does not match, length of service parameter does not match
06070012	Data type does not match, length of service parameter too high
06070013	Data type does not match, length of service parameter too low
06090011	Subindex does not exist
06090030	Value range of parameter exceeded (only for write access)
06090031	Value of parameter written too high
06090032	Value of parameter written too low
06090036	Maximum value is less than minimum value
08000000	General error
08000020	Data cannot be transferred or stored to the application
08000021	Data cannot be transferred or stored to the application because of local control *1
08000022	Data cannot be transferred or stored to the application because of the present device state
08000023	Object dictionary dynamic generation fails or no object dictionary is present

*1. In this state, the slave operates locally and cannot be controlled from the EtherCAT master.

5-6 Synchronization Mode and Communications Cycle

1S-series Servo Drives Advance Type support the following synchronization modes.

- Distributed Clock (DC) Mode
- Free-Run Mode

Note SM Event Mode is not supported.

5-6-1 Distributed Clock (DC) Mode

A mechanism called distributed clock (DC) is used to synchronize EtherCAT communications.

The DC Mode is used for 1S-series Servo Drives Advance Type to perform highly accurate control in a multi-axis system.

In DC Mode, the master and slaves are synchronized by sharing the same clock.

Interruptions (Sync0) are generated in the slaves at precise intervals based on this clock.

Servo Drive control is executed at this precise timing.

Communications Cycle (DC Cycle)

The communications cycle is determined by setting the output cycle of Sync0 signal on the master side.

Setting range : 125 μs/250 μs/500 μs/750 μs/1 to 10 ms (in 0.25 ms increments)

5-6-2 Free-Run Mode

You can use the Free-Run Mode when synchronization such as the DC Mode is not required.

In Free-Run Mode, slaves perform I/O processing, i.e. refresh I/O data asynchronously with the communications cycle of the master.

Communications Cycle

The communications cycle is determined by the cycle time of the master.

Setting range : 125 μs to 100 ms

5-7 Emergency Messages

When an error or warning occurs in 1S-series Servo Drives Advance Type, an emergency message is sent to the master through SDO communications. An emergency message is not sent for a communications error.

You can select whether or not to send emergency messages in **Diagnosis History** (10F3 hex).

When the power supply is turned ON, **Diagnosis History – Flags** (10F3-05 hex) is set to *0* (**not notify**).

To send emergency messages, set the least significant bit of **Diagnosis History – Flags** (10F3-05 hex) to *1* every time the power is turned ON.

An emergency message consists of 8-byte data.

Byte	0	1	2	3	4	5	6	7
Contents	Emergency Error Code*1		Error Register (object 1001 hex)	Manufacturer-specific Error Field*2				

*1. Error codes (FF00 to FFFF hex) in the manufacturer-specific area are used. Byte 0 is fixed to FF hex, and byte 1 shows the main code of an error number or warning number.

*2. Byte 3 is not used. An error code is shown in bytes 4 to 7. For details on error event codes, refer to *A-4 Sysmac Error Status Codes* on page A-116.

Note For details on errors and warnings of the Servo Drive, refer to *Section 12 Troubleshooting*.

5-8 Sysmac Device Features

Sysmac Device refers to the control device product designed according to standardized communications and user interface specifications for OMRON control devices. And the features that are available with such a device are called Sysmac Device Features.

This section describes the features that the Servo Drive provides when it is combined with a Machine Automation Controller such as NJ/NX series, NY-series IPC Machine Controller, and automation software.

Sysmac Error Status

Because, in Sysmac Devices, errors that may occur in slaves are systematized, you can check the causes and remedies for errors with a common procedure.

The status of an error can be monitored in the **Sysmac Error Status** (2002-01 hex). To display the error detected by the Servo Drive in Sysmac Studio, the **Sysmac Error Status** (2002-01 hex) must be mapped to the PDO. Sysmac Studio, by default, uses the **512th transmit PDO Mapping** (1BFF hex) assignment to map the **Sysmac Error Status** (2002-01 hex) automatically to the PDO.

Additional Information

- For the **Sysmac Error Status** (2002-01 hex), refer to *A-2-7 Manufacturer Specific Objects* on page A-38.
- For errors displayed in Sysmac Studio, refer to *A-4 Sysmac Error Status Codes* on page A-116.

Saving the Node Address Setting

When the ID switches are set to 00, the value of the node address you set in Sysmac Studio is used. (Software setting)

When Software setting is enabled, in Sysmac Studio, execute Slave Node Address Writing on the EtherCAT tab page to save the slave node address setting in the non-volatile memory of the Servo Drive.

● Software Setting

The set value saved as Slave Information Interface (SII) information in the non-volatile memory of the slave is used as the node address.

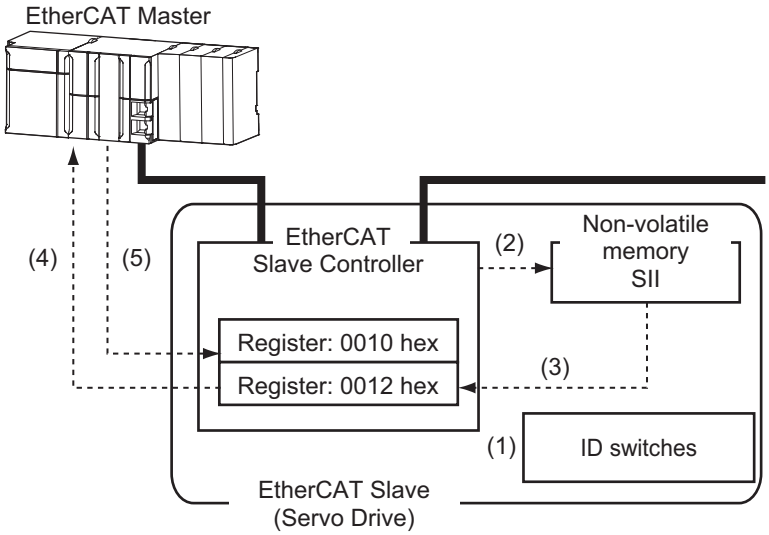

(1) Set the ID switches to 00 during power OFF.

(2) Write a node address value to Slave SII from the master.

(3) When the slave power is turned ON, the node address value is applied to Register: 0012 hex by the software.

(4) The EtherCAT master reads the value that is set in Register: 0012 hex.

(5) The EtherCAT master writes the value of 0012 hex to 0010 hex as the node address.

● Switch Setting

The value of the ID switches of the slave is used as the node address.

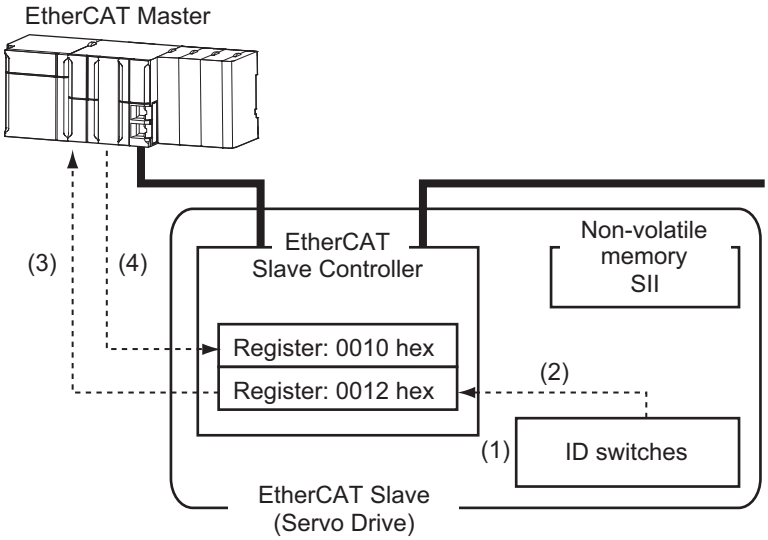

(1) Set the ID switches during power OFF.

(2) When the slave power is turned ON, the value of the ID switches is applied to the register: 0012 hex.

(3) The EtherCAT master reads the value that is set in Register: 0012 hex.

(4) The EtherCAT master writes the value of 0012 hex to 0010 hex as the node address.

Serial Number Display

The serial number saved in the non-volatile memory of the Servo Drive is displayed in the **Serial Number** (1018-04 hex). Controllers that support Sysmac Device Features can use this serial number to check the network configuration.

To enable this check, in Sysmac Studio, set **Serial Number Check Method** to **Setting = Actual Device** on the EtherCAT tab page.

If the specified condition is not met, a Network Configuration Verification Error will occur.

Additional Information

This network configuration check can detect the replacement of slave devices, which prevents you from forgetting to set parameters on those slaves.

Compliance with ESI Specification (ETG.2000 S (R) V1.0.10)

The ESI Specification is a set of specifications that define the entries required in an EtherCAT Slave Information (ESI) file.

Controllers that support Sysmac Device Features can use the Option function defined in the ESI Specification to identify the backup parameters stored on slaves.

The backup parameters on an identified slave can be backed up and restored from Sysmac Studio.

SII Data Check

The Slave Information Interface (SII) contains EtherCAT slave configuration information that is written to the non-volatile memory of an EtherCAT slave.

Sysmac Device EtherCAT slaves check the SII information from the slave side.

If one of these slaves finds that SII information with which it cannot operate was written, it generates an SII Verification Error (Error No. 88.03) or ESC Initialization Error (Error No. 88.01). If this error is not cleared after the power cycle, contact your OMRON sales representative.

Precautions for Correct Use

Do not use non-OMRON configuration tools to edit the SII information.

5-9 Cable Redundancy Function

Configuring a ring topology on the EtherCAT system enables communications to continue even if an EtherCAT physical layer link is disconnected in the ring topology.

Possible causes for the ring disconnection status in which an EtherCAT physical layer link is disconnected are as follows:

- An EtherCAT communications cable is disconnected, broken, short-circuited, or has a contact failure.
- Failure of the EtherCAT physical layer of a Servo Drive

5-9-1 Objects Requiring Settings

When the cable redundancy function is used on the Machine Automation Controller NJ/NX Series, make the following settings.

Index (hex)	Subindex (hex)	Name	Recommended setting	Description
2200	00	Communications Error Setting	2 or more	Set the value to 2 or more because one communications error occurs when the ring is disconnected or during the restoration. The default value is 1.

When you build a safety system using FSoE communications, you also need to set the following item. As for the detail, refer to the *NX-series Safety Control Unit User's Manual* (Cat. No. Z930).

Item	Recommended setting	Description
Watchdog Time of Safety Process Data Communications Settings	Auto set value + EtherCAT communications cycle × 2 or more*1	Make the value at least two communications cycles larger than the auto set value because one communications error occurs when the ring is disconnected or during the restoration.

*1. If EtherCAT communications cycle × 2 is less than 2 ms, add 2 ms or more to the auto set value.

5-9-2 Description of Operation

This function enables communications to continue even if a cable is disconnected or broken in a ring topology and the ring disconnection status results. A communications error may occur immediately after the ring disconnection status occurs or during restoration from the ring disconnection status, and cause all Servo Drives to detect EtherCAT Communications Warnings temporarily. When an EtherCAT Communications Warning occurs, the communications error period command correction function corrects the target position. Refer to *7-14 Command Compensation Function for Communications Error* on page 7-49 for details.

Even when the cable is disconnected from the ECAT IN connector on the Servo Drive B and the ring disconnection status results as in the figure below, all Servo Drives can continue communications. If an EtherCAT communications cable is disconnected, protect the disconnected connector.

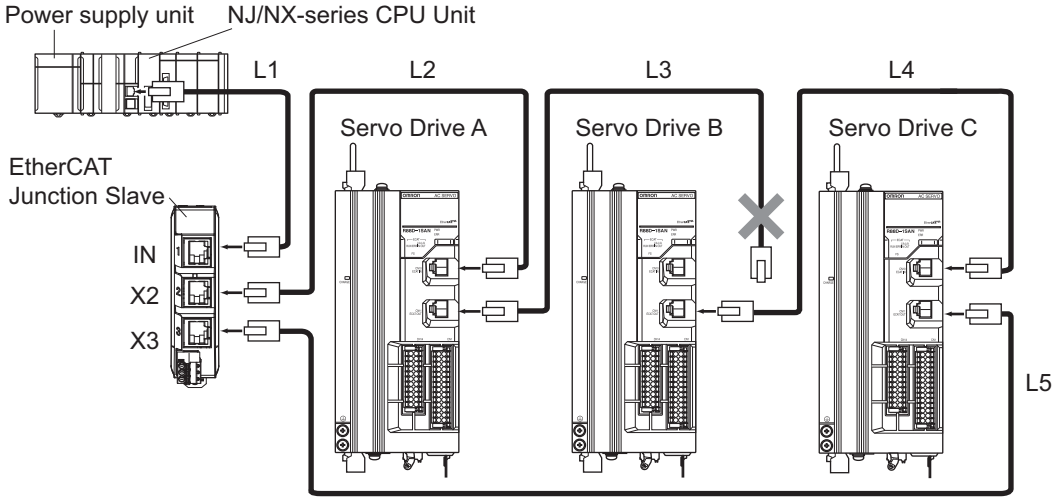

The ring disconnection status may have resulted not because an EtherCAT communications cable is disconnected, but because a communications cable is broken or short-circuited, or because a Servo Drive broke down. If the ring disconnection status occurs, immediately perform inspection and take appropriate measures. Refer to *13-4 Method for Ring Disconnection Maintenance and Inspection* on page 13-5 for details on the inspection method.

After the ring disconnection status occurs because a communications cable is broken or short-circuited, or because a Servo Drive broke down, continuing to use the devices as they are may stop the entire communications system.

Precautions for Correct Use

If the ring disconnection status occurs, immediately perform inspection and take appropriate measures. Equipment damage may result.

5-9-3 Procedure of Checking Operation

This section takes the following configuration example and describes how to check that the cable redundancy function operates correctly.

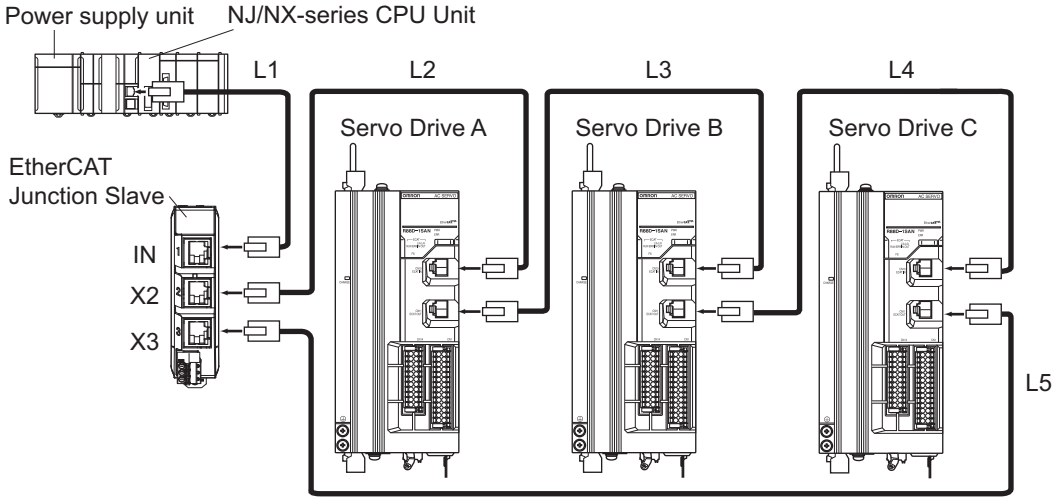

1 Check that the devices start up in the normal status.

- Connect the EtherCAT communications cables correctly, and turn ON the power supply to the EtherCAT master and to the slaves.
- Check that there is no problem with the EtherCAT master and the slaves.
- Check that the L/A IN indicators and the L/A OUT indicators of all slaves blink.
- Turn OFF the power supply to the EtherCAT master and to the slaves.

2 With a cable disconnected from a connector, check that the communications continue in the ring disconnection status.

- Disconnect the cable from the ECAT IN connector on Servo Drive B, and protect the disconnected cable connector.
- Turn ON the power supply to the EtherCAT master and to the slaves.
- Check that there is no problem with the EtherCAT master and the slaves.

3 Check the location where the ring is disconnected.

- Check that the L/A OUT indicator of Servo Drive A and the L/A IN indicator of Servo Drive B are OFF.
- Check that the other the L/A IN indicators and the L/A OUT indicators blink.
- Stop operation and turn OFF the power supply to the EtherCAT master and to the slaves.
- Connect the disconnected cable to the ECAT IN connector on Servo Drive B.

4 With a cable disconnected from another connector, check that the communications continue in the ring disconnection status.

- Disconnect the cable from the ECAT OUT connector on Servo Drive B, and protect the disconnected cable connector.
- Turn ON the power supply to the EtherCAT master and to the slaves.
- Check that there is no problem with the EtherCAT master and the slaves.

5 Check the location where the ring is disconnected.

- Check that the L/A OUT indicator of Servo Drive B and the L/A IN indicator of Servo Drive C are OFF.
- Check that the other the L/A IN indicators and the L/A OUT indicators blink.
- Stop operation and turn OFF the power supply to the EtherCAT master and to the slaves.
- Connect the disconnected cable to the ECAT OUT connector on Servo Drive B.

Now you are done with checking operation.

5-9-4 Slave Communications Statuses When Cable Redundancy Function Is Used

This section takes the following example in which the cable redundancy function is used and a ring topology is configured, and describes communications statuses during normal operation and in the ring disconnection status. The configuration example contains three devices in the ring topology.

● Normal Status

All slaves are in communication.

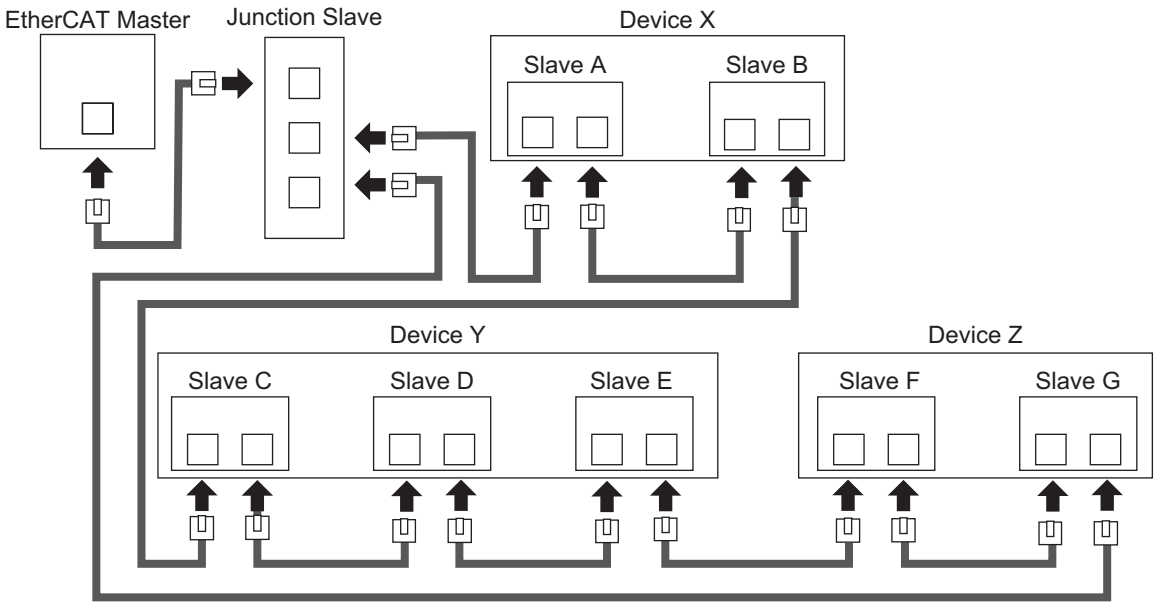

● Ring Disconnection Status

Although the ring is disconnected between Slave C and D, all slaves continue communications.

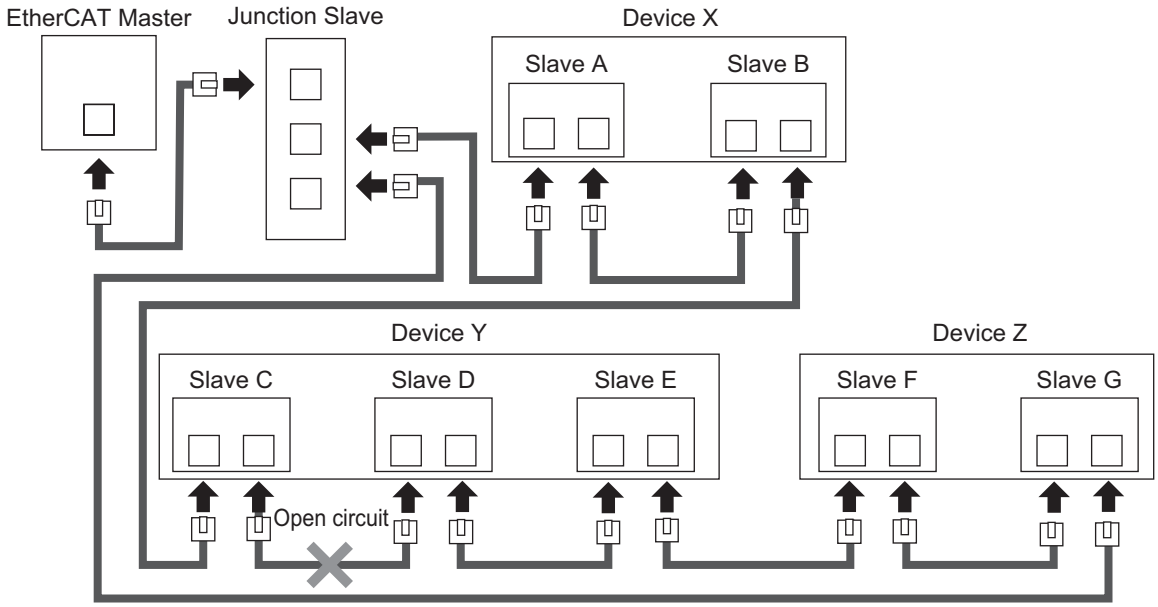

Stop Device X to Z and then turn OFF the power supply to the EtherCAT master. Fix the ring disconnection status by replacing the cable, and then turn ON the power supply to the EtherCAT master and to the devices, which returns the system to the normal communications status.

5-9-5 Relation between the Network Configuration Information and the Actual Configuration

The following table shows the relation between the network configuration information downloaded in an NJ/NX-series CPU Unit supporting the cable redundancy function and the actual configuration.

No.	Network Configuration Information	Actual Configuration	EtherCAT Communications Status	Communications Status with a Cable Disconnected or Broken
1	Daisy chain and branching topology only	Daisy chain and branching topology only (same as the network configuration information)	Normal status	The communications status changes to the minor fault status in which part of the slaves can continue communications.*1
2		Contains the ring topology	Minor fault	All slaves can continue communications. Removing a cable added to the network configuration information and resetting the error returns the communications status to the status of No. 1.
3	Contains the ring topology	Daisy chain and branching topology only	Ring disconnection status	The communications status changes to the minor fault status in which part of the slaves can continue communications. *1
4		Contains the ring topology (same as the network configuration information)	Normal status	The communications status changes to the ring disconnection status in which all slaves can continue communications. If a cable is disconnected or broken in this status, the status changes to the minor fault status in which part of the slaves can continue communications. *1

*1. If a minor fault occurs, slaves not separated from the EtherCAT master operate according to **Fail-soft Operation Setting** of the CPU Unit. Slaves separated from the EtherCAT master cannot continue communications. Refer to the *NJ/NX-series CPU Unit Built-in EtherCAT Port User's Manual* (Cat. No. W505) for details on Fail-soft Operation Setting.

The following example shows a case of No. 4. In this example, the communications status changes from the normal status to the ring disconnection status, and then the power supply to Device Y is turned OFF, which turns OFF the power supply to Slave C to E and causes a minor fault. Slave A, B, F, and G continue communications even after the minor fault occurs.

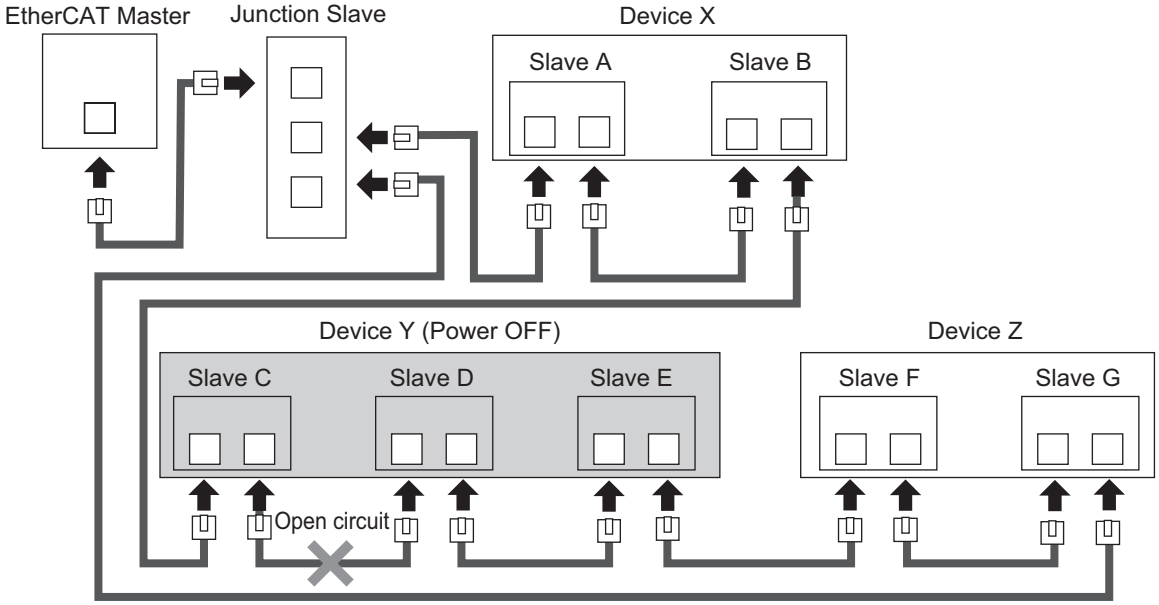

6

Basic Control Functions

This section explains the outline and settings of basic control functions.

6-1 Outline of Control Functions 6-2

6-1-1 Basic Control and Control Methods 6-2

6-1-2 Control Method 6-3

6-2 Control Blocks 6-5

6-2-1 Block Diagram for Position Control 6-5

6-2-2 Block Diagram for Velocity Control 6-7

6-2-3 Block Diagram for Torque Control 6-9

6-3 Cyclic Synchronous Position Mode 6-10

6-4 Cyclic Synchronous Velocity Mode 6-12

6-5 Cyclic Synchronous Torque Mode 6-14

6-6 Profile Position Mode 6-16

6-7 Profile Velocity Mode 6-21

6-8 Homing Mode 6-24

6-9 Connecting with OMRON Controllers 6-25

6-1 Outline of Control Functions

This section explains the implemented control functions.

6-1-1 Basic Control and Control Methods

1S-series Servo Drives Advance Type can use the following controls to control Servomotors.

- Position control
- Velocity control
- Torque control

The following control methods are available for position control and velocity control.

- Two-degree-of-freedom (TDF) control
- One-degree-of-freedom (ODF) control

Each control corresponds to the following modes of operation defined by the CiA402 drive profile.

Basic control	Control method	Modes of operation
Position control	TDF	Cyclic synchronous position mode
	ODF	Profile position mode
		Homing mode
Velocity control	TDF	Cyclic synchronous velocity mode
	ODF	Profile velocity mode
Torque control	---	Cyclic synchronous torque mode

6-1-2 Control Method

For the 1S-series Servo Drives Advance Type, TDF control and ODF control are available.

TDF control is a control method proper for positioning control. The smooth internal commands are generated so that the control target can be followed, and TDF controls the internal commands. In TDF control, the following ability for the internal commands is improved and the overshooting is reduced making it easier to reduce the positioning stabilization time. Use TDF control to reduce the impact on devices. If the delay of the internal commands itself for a command value seems to be a problem, adjust the command following gain.

ODF control is a control method proper to use when a high-precision path following performance such as synchronization control is necessary. The delay for a command can be minimized by setting the ODF Velocity Feed-forward - Gain to a larger value such as 100%. However, if a command that changes the acceleration rapidly is given, the command cannot be followed, and the overshooting occurs. In this case, correct the command value itself so that the command value change gets smoother.

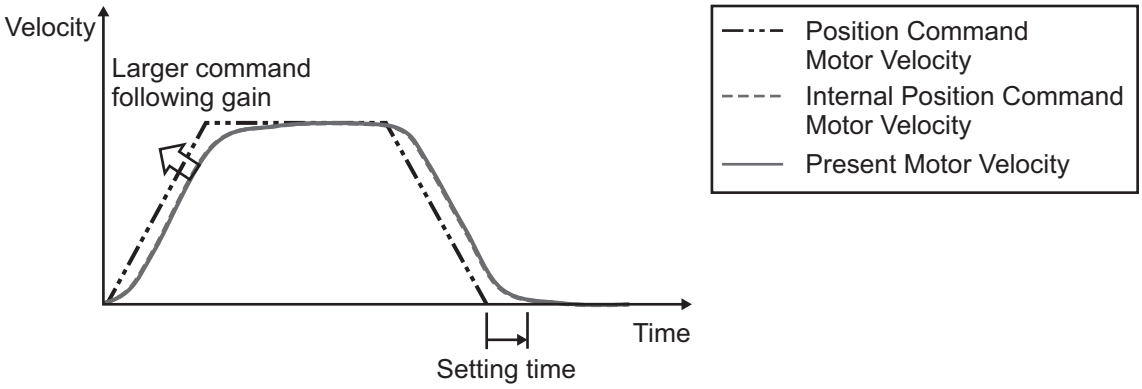

Time response waveform in TDF control

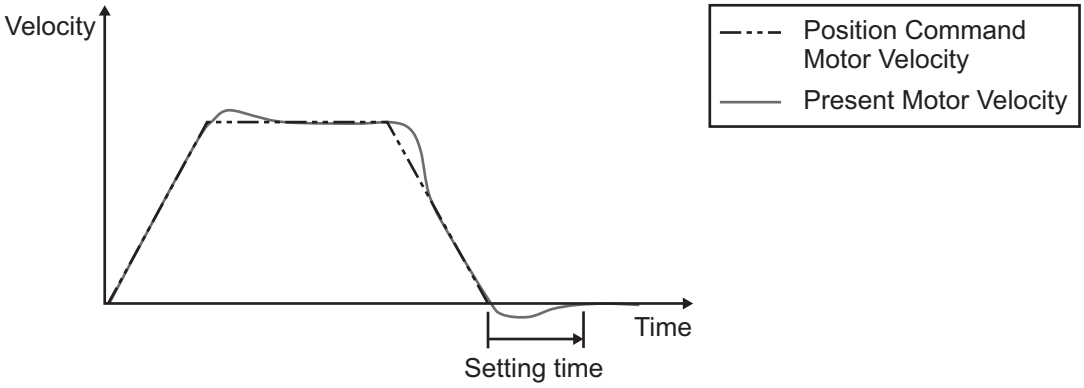

Time response waveform in ODF control
(ODF Velocity Feed-forward–Gain=100%)

TDF Control Structure Diagram

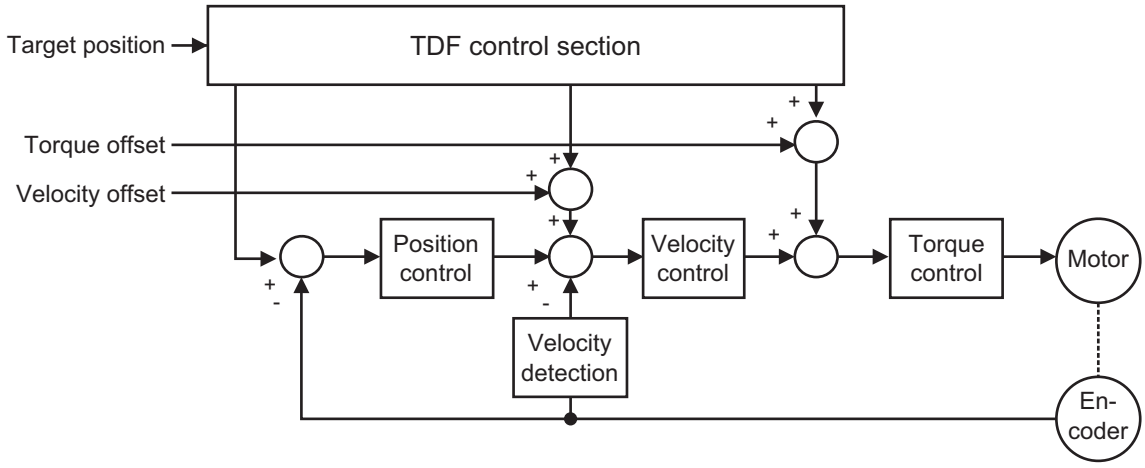

ODF Control Structure Diagram

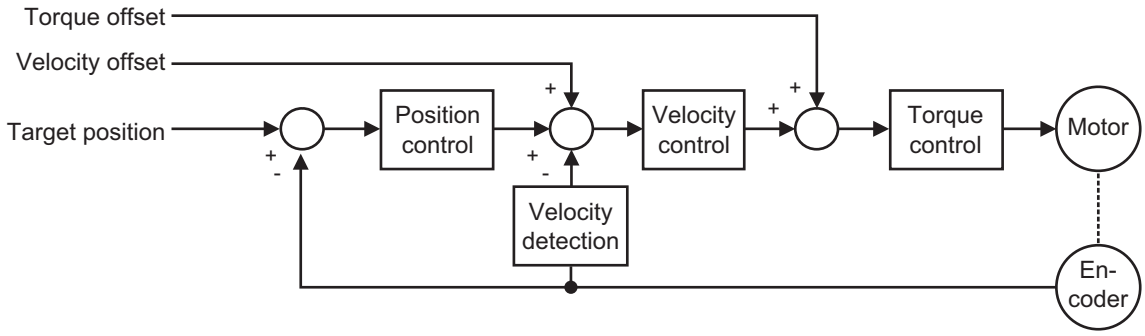

Related Objects

Use **Control Method Selection** (3000-03 hex) to switch between TDF control and ODF control.

Index (hex)	Subindex (hex)	Name	Description	Reference
3000	---	Basic Functions	Set the basic functions.	P. 9-7
	03	Control Method Selection	Switches the control method between one-degree-of-freedom control and two-degree-of-freedom control. 0: ODF control 1: TDF control	P. 9-8

6-2 Control Blocks

The block diagrams for position control, velocity control and torque control are given.

6-2-1 Block Diagram for Position Control

The block diagrams for TDF position control and ODF position control are given.

TDF Position Control

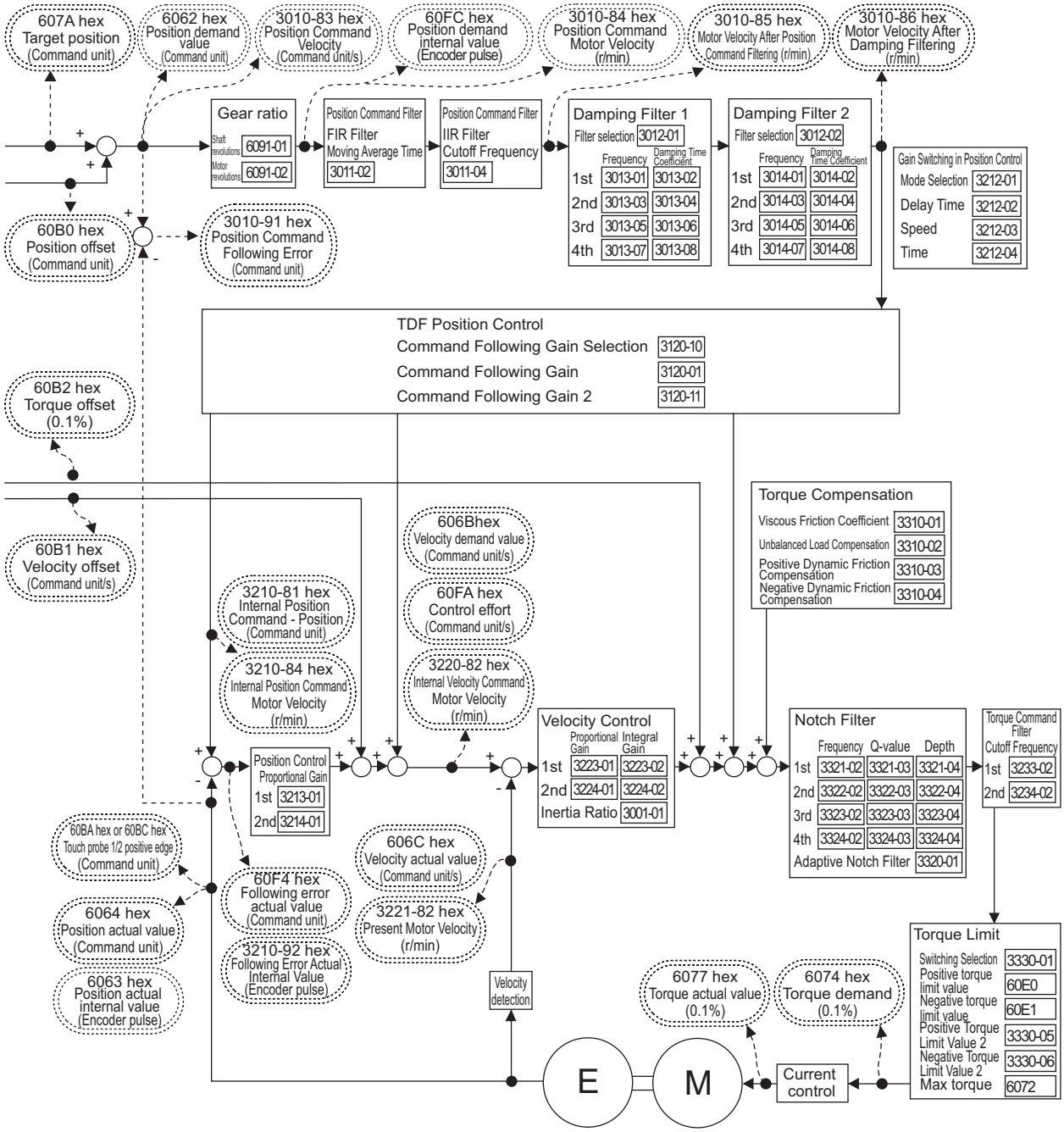

ODF Position Control

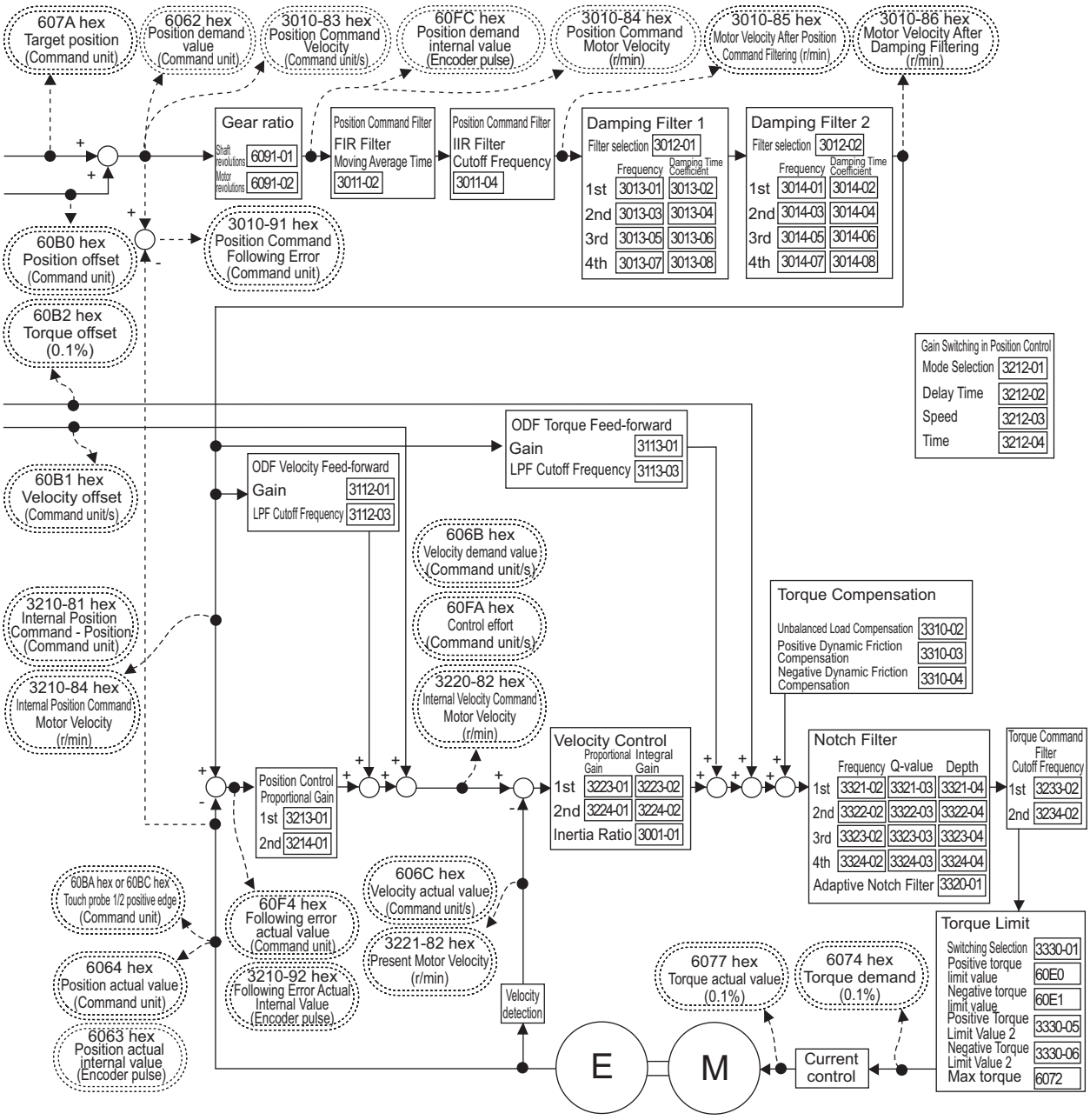

6-2-2 Block Diagram for Velocity Control

The block diagrams for TDF velocity control and ODF velocity control are given.

TDF Velocity Control

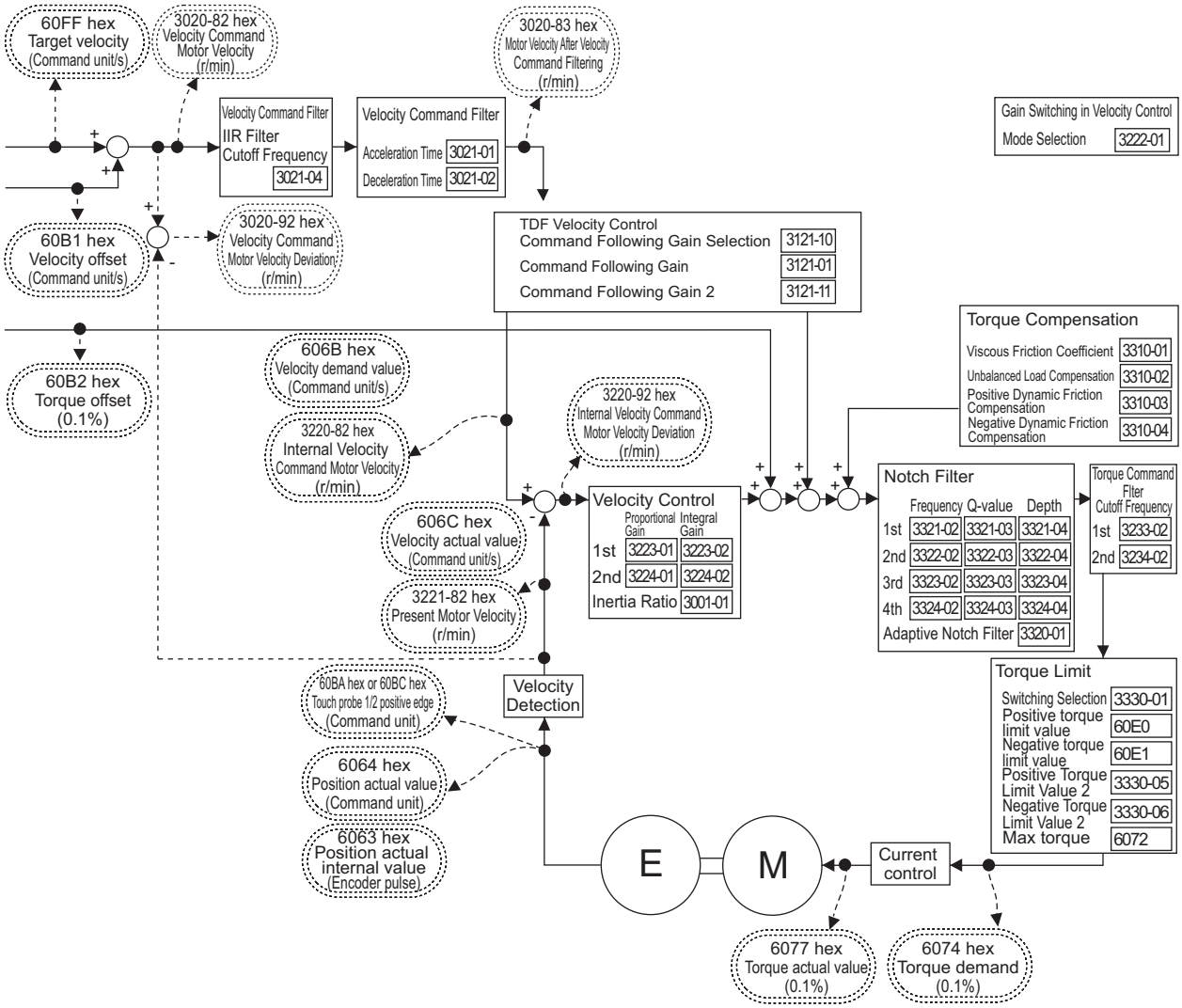

ODF Velocity Control

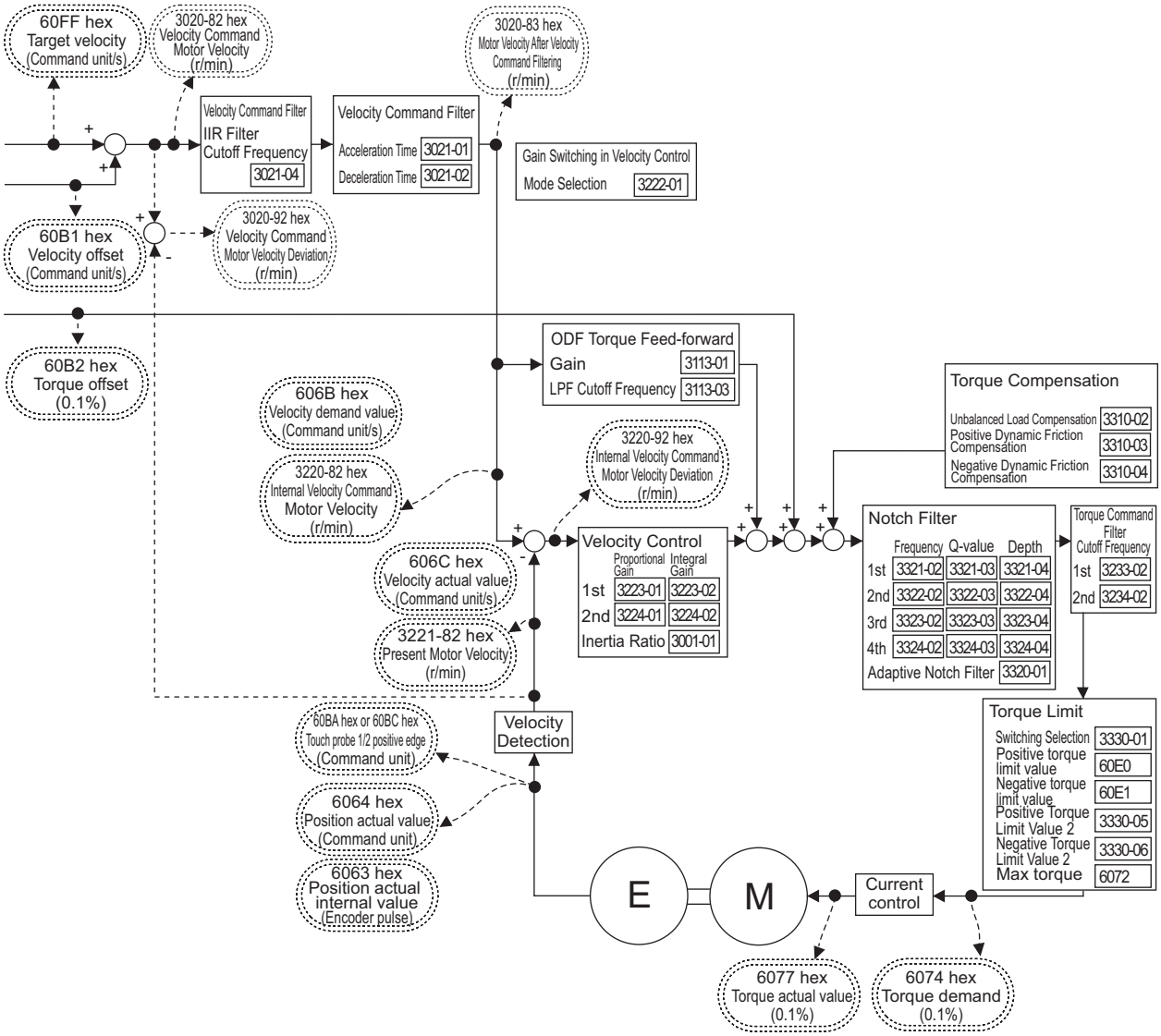

6-2-3 Block Diagram for Torque Control

The block diagram for torque control is given.

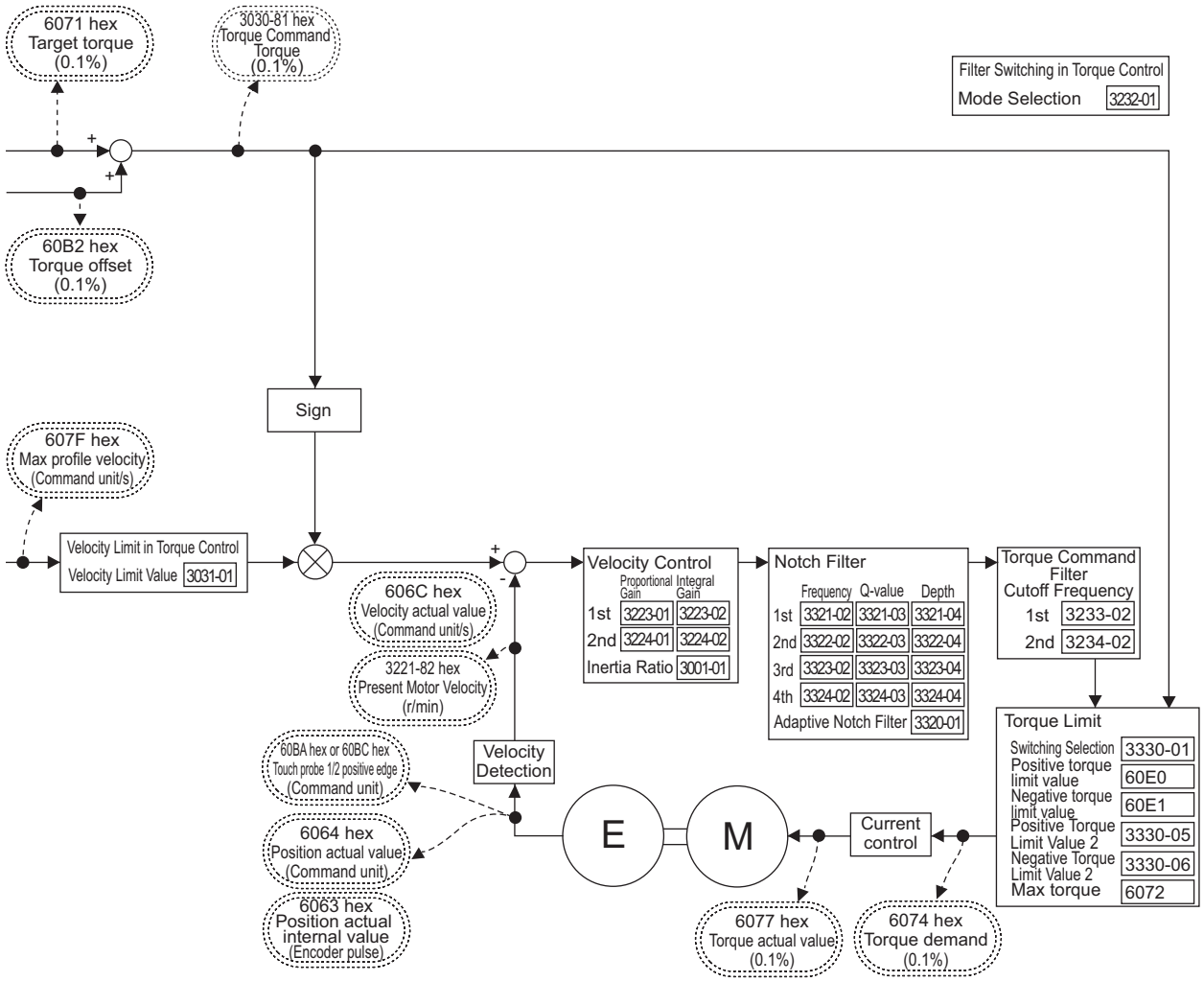

6-3 Cyclic Synchronous Position Mode

In this mode of operation, the controller has a path generation function (an operation profile calculation function) and it gives the target position to the Servo Drive in cyclic synchronization.

Velocity offset (60B1 hex) and **Torque offset** (60B2 hex) can be used as the velocity feed-forward and torque feed-forward amounts respectively.

Cyclic Synchronous Position Mode Configuration

The following diagram shows the configuration of the Cyclic synchronous position mode.

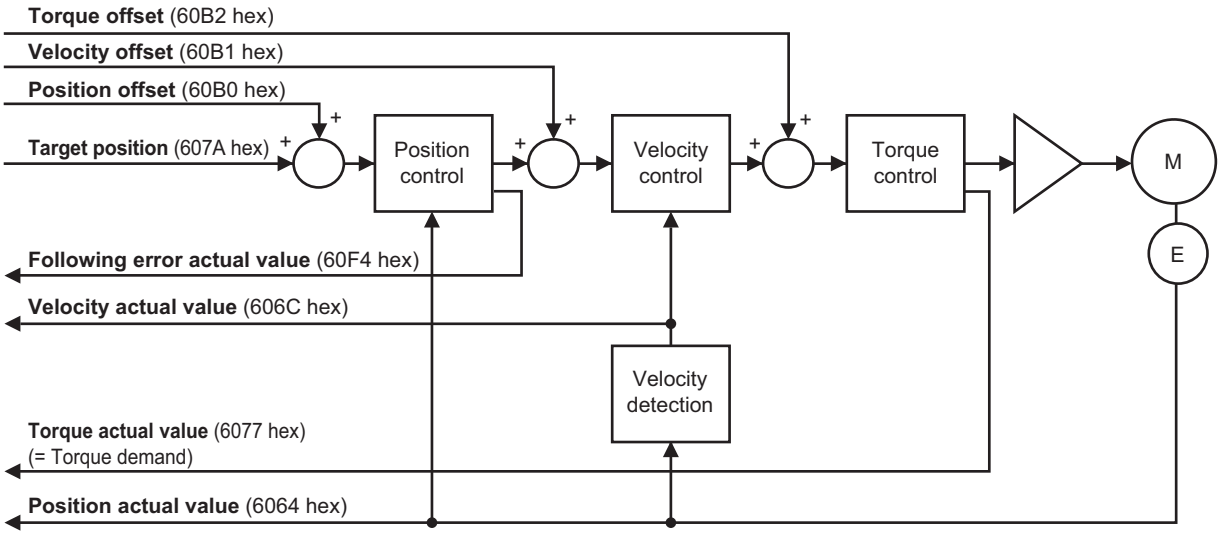

The following diagram shows the configuration of the control function of the Cyclic synchronous position mode.

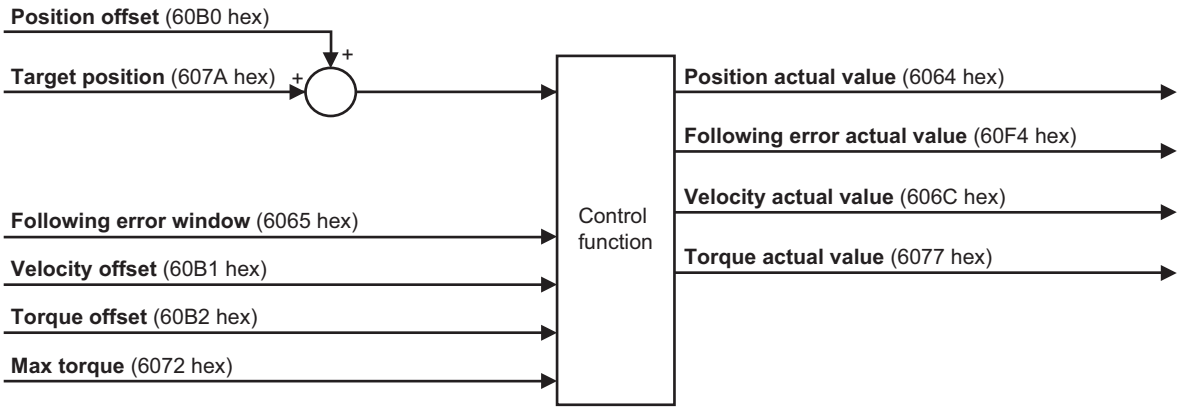

Related Objects

Index (hex)	Subindex (hex)	Name	Access	Size	Unit	Setting range	Default setting
6040	00	Controlword	RW	U16	---	0 to FFFF hex	0000 hex
6041	00	Statusword	RO	U16	---	---	---
6060	00	Modes of operation	RW	INT8	---	0 to 10	0
6064	00	Position actual value	RO	INT32	Command unit	---	---
6065*1	00	Following error window	RW	U32	Command unit	0 to 2,147,483,647 or 4,294,967,295	10,500,000
606C	00	Velocity actual value	RO	INT32	Command unit/s	---	---
6072	00	Max torque	RW	U16	0.1%	0 to 5,000	5,000
6077	00	Torque actual value	RO	INT16	0.1%	---	---
607A	00	Target position	RW	INT32	Command unit	-2,147,483,648 to 2,147,483,647	0
60B0	00	Position offset	RW	INT32	Command unit	-2,147,483,648 to 2,147,483,647	0
60B1	00	Velocity offset	RW	INT32	Command unit/s	-2,147,483,648 to 2,147,483,647	0
60B2	00	Torque offset	RW	INT16	0.1%	-5,000 to 5,000	0
60F4	00	Following error actual value	RO	INT32	Command unit	---	---

*1. **Following error window** can be set to between *0* and *2,147,483,647*, or *4,294,967,295*. If the object is set to *4,294,967,295*, the detection of Excessive Position Deviation Error will be disabled. If it is set to *0*, an Excessive Position Deviation Error will always occur. If the set value is between *2,147,483,647* and *4,294,967,294*, it is treated as *2,147,483,647*.

6-4 Cyclic Synchronous Velocity Mode

In this mode of operation, the controller has a path generation function (an operation profile calculation function) and it gives the target velocity to the Servo Drive in cyclic synchronization.

The **Torque offset** (60B2 hex) can be used as the torque feed-forward amount.

Cyclic Synchronous Velocity Mode Configuration

The following diagram shows the configuration of the Cyclic synchronous velocity mode.

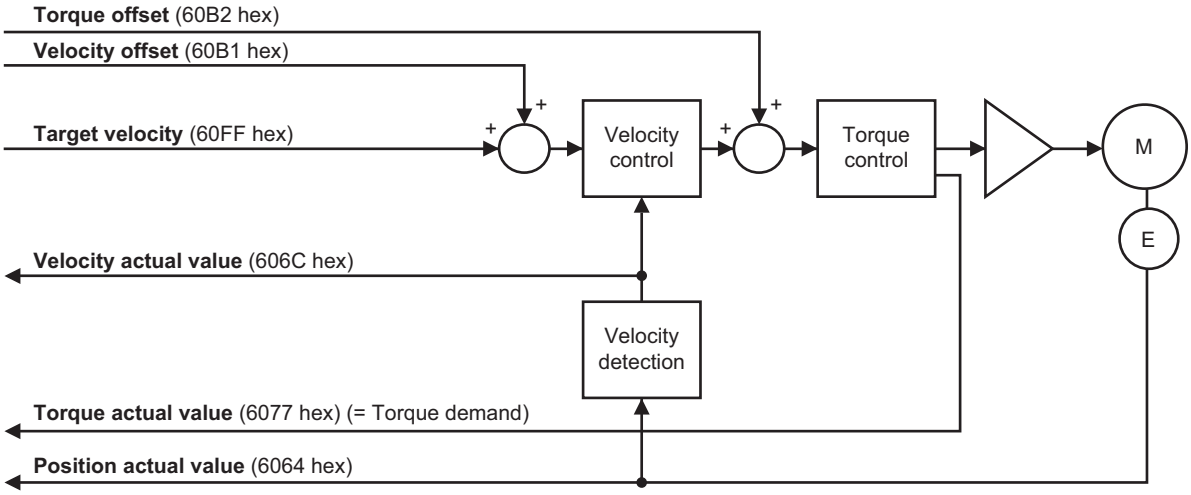

The following diagram shows the configuration of the control function of the Cyclic synchronous velocity mode.

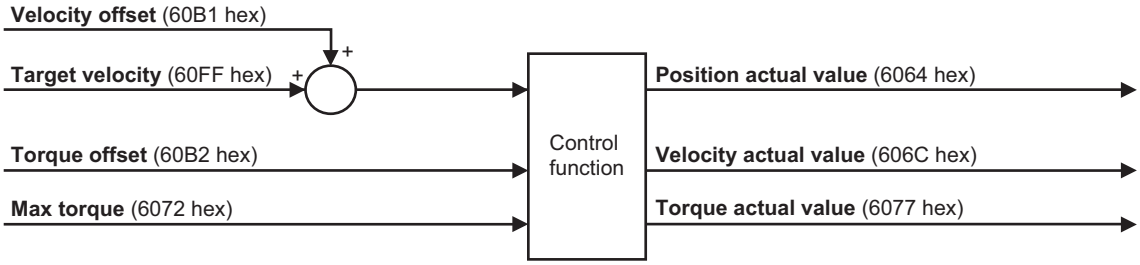

Related Objects

Index (hex)	Subindex (hex)	Name	Access	Size	Unit	Setting range	Default setting
6040	00	Controlword	RW	U16	---	0 to FFFF hex	0000 hex
6041	00	Statusword	RO	U16	---	---	---
6060	00	Modes of operation	RW	INT8	---	0 to 10	0
6064	00	Position actual value	RO	INT32	Command unit	---	---
606C	00	Velocity actual value	RO	INT32	Command unit/s	---	---
6072	00	Max torque	RW	U16	0.1%	0 to 5,000	5,000
6077	00	Torque actual value	RO	INT16	0.1%	---	---
60B1	00	Velocity offset	RW	INT32	Command unit/s	-2,147,483,648 to 2,147,483,647	0
60B2	00	Torque offset	RW	INT16	0.1%	-5,000 to 5,000	0
60FF	00	Target velocity	RW	INT32	Command unit/s	-2,147,483,648 to 2,147,483,647	0

6-5 Cyclic Synchronous Torque Mode

In this mode of operation, the controller has a path generation function (an operation profile calculation function) and it gives the target torque to the Servo Drive in cyclic synchronization.

Cyclic Synchronous Torque Mode Configuration

The following diagram shows the configuration of the Cyclic synchronous torque mode.

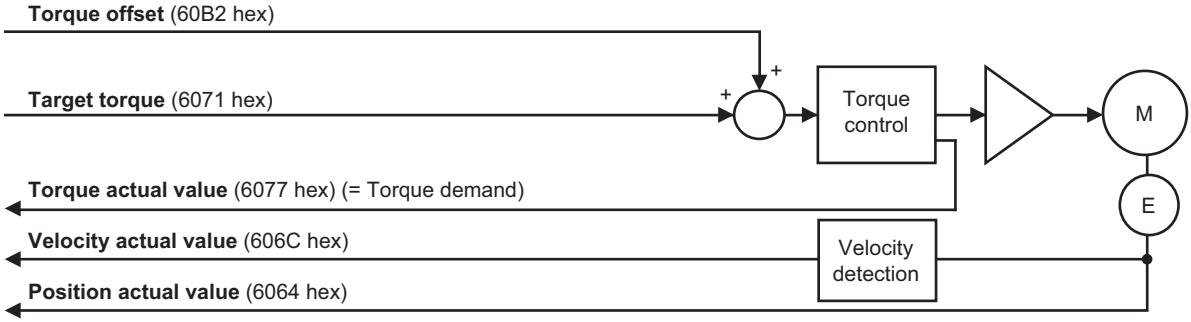

The following diagram shows the configuration of the control function of the Cyclic synchronous torque mode.

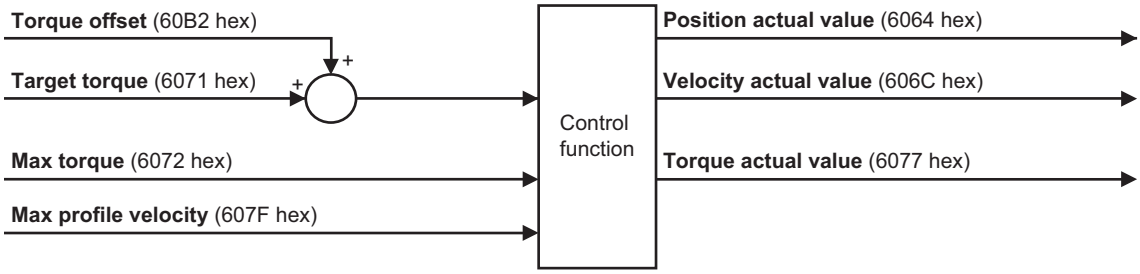

Related Objects

Index (hex)	Subindex (hex)	Name	Access	Size	Unit	Setting range	Default setting
6040	00	Controlword	RW	U16	---	0 to FFFF hex	0000 hex
6041	00	Statusword	RO	U16	---	---	---
6060	00	Modes of operation	RW	INT8	---	0 to 10	0
6064	00	Position actual value	RO	INT32	Command unit	---	---
606C	00	Velocity actual value	RO	INT32	Command unit/s	---	---
6071	00	Target torque	RW	INT16	0.1%	-5,000 to 5,000	0
6072	00	Max torque	RW	U16	0.1%	0 to 5,000	5,000
6077	00	Torque actual value	RO	INT16	0.1%	---	---
607F	00	Max profile velocity	RW	U32	Command unit/s	0 to 2,147,483,647	0
60B2	00	Torque offset	RW	INT16	0.1%	-5,000 to 5,000	0

Related Functions

Index (hex)	Subindex (hex)	Name	Description	Refer-ence
3031	---	Velocity Limit in Torque Control	---	P. 9-25
	01	Velocity Limit Value	Sets the velocity limit value in the torque control. The torque control is performed so that the value set in the Velocity Limit Value is not exceeded.	P. 9-25

6-6 Profile Position Mode

In this mode of operation, the controller uses the path generation function (an operation profile calculation function) inside the Servo Drive to perform PTP positioning operation. It executes path generation based on the target position, profile velocity, profile acceleration, profile deceleration, and other information.

The Profile position mode can be used when the communications period is 250 μs or more. If the communications period is less than 250 μs, a Command Error (Error No. 91.01) occurs.

The following diagram shows the configuration of the path generation function.

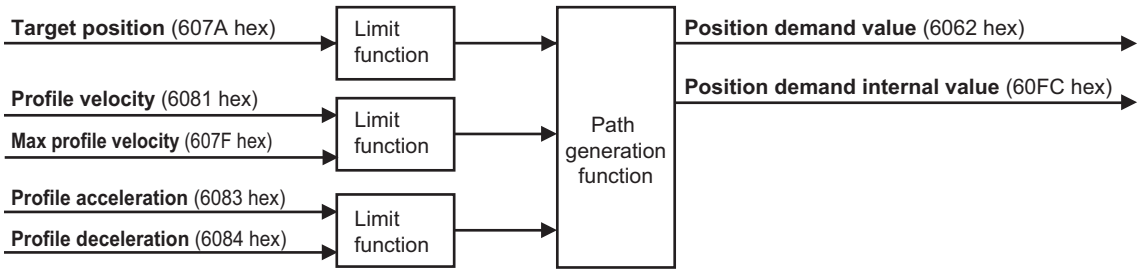

To use these objects, map them in the variable PDO mapping as appropriate.

Profile Position Mode Configuration

The following diagram shows the configuration of Profile position mode.

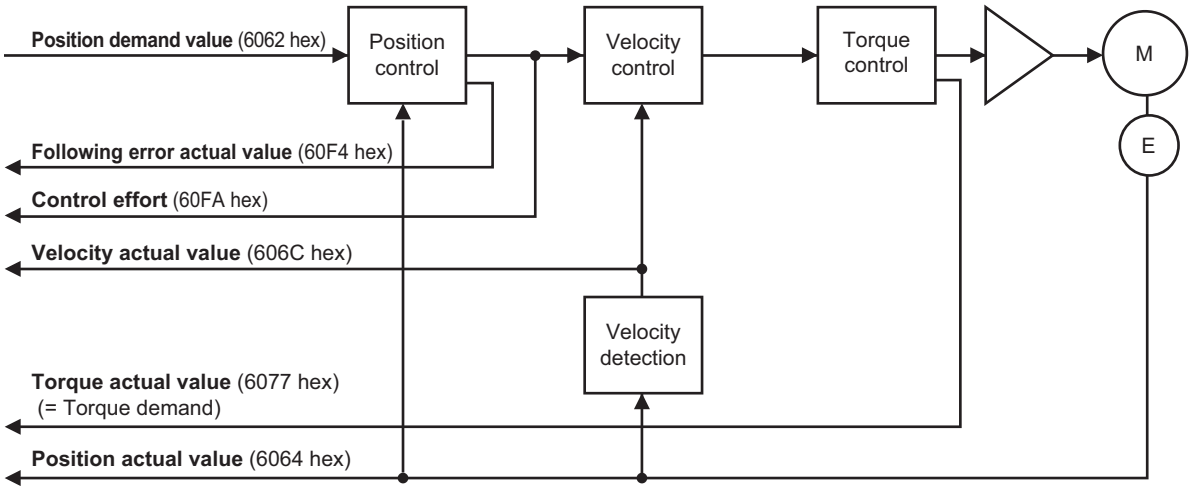

The following diagram shows the control function configuration of Profile position mode.

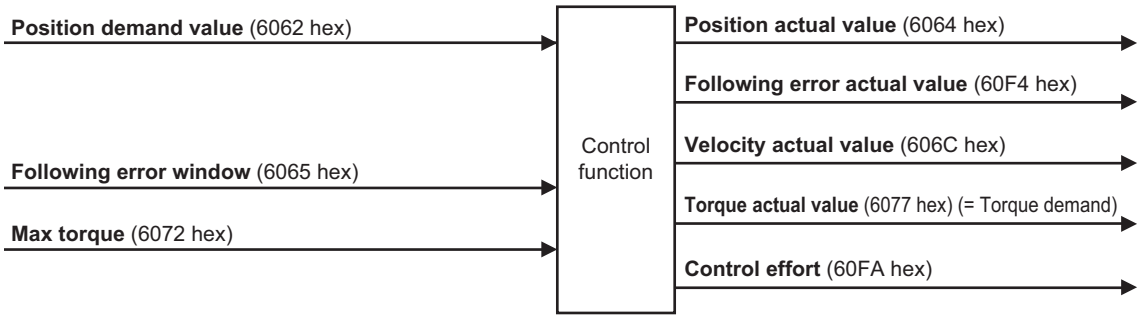

Related Objects

Index (hex)	Subindex (hex)	Name	Access	Size	Unit	Setting range	Default setting
6040	00	Controlword	RW	U16	---	0 to FFFF hex	0000 hex
6041	00	Statusword	RO	U16	---	---	---
6060	00	Modes of operation	RW	INT8	---	0 to 10	0
6062	00	Position demand value	RO	INT32	Command unit	---	---
6064	00	Position actual value	RO	INT32	Command unit	---	---
6065*1	00	Following error window	RW	U32	Command unit	0 to 2,147,483,647 or 4,294,967,295	10,500,000
606C	00	Velocity actual value	RO	INT32	Command unit/s	---	---
6072	00	Max torque	RW	U16	0.1%	0 to 5,000	5,000
6077	00	Torque actual value	RO	INT16	0.1%	---	---
607A*2	00	Target position	RW	INT32	Command unit	-2,147,483,648 to 2,147,483,647	0
607F	00	Max profile velocity	W	U32	Command unit/s	0 to 2,147,483,647	2,147,483,647
6081	00	Profile velocity	RW	U32	Command unit/s	0 to 2,147,483,647	0000 hex
6083	00	Profile acceleration	RW	U32	Command unit/s^2	1 to 2,147,483,647	125,000
6084	00	Profile deceleration	RW	U32	Command unit/s^2	1 to 2,147,483,647	125,000
60F4	00	Following error actual value	RO	INT32	Command unit	---	---
60FA	00	Control effort	RO	INT32	Command unit/s	---	---
60FC	00	Position demand internal value	RO	INT32	Encoder unit	---	---

*1. **Following error window** can be set to between *0* and *2,147,483,647*, or *4,294,967,295*. If the object is set to *4,294,967,295*, the detection of Excessive Position Deviation Error will be disabled. If it is set to *0*, an Excessive Position Deviation Error will always occur. If the set value is between *2,147,483,647* and *4,294,967,294*, it is treated as *2,147,483,647*.

*2. To enable the Servo Drive to accept commands without fail, the object value must always be retained for two communications cycles or more.

Description of Function

Set the **Controlword** (6040 hex) bit 5 (Change set immediately) to *1*.

When you set the **Target position** (607A hex) and the **Profile velocity** (6081 hex) and then change the **Controlword** (6040 hex) bit 4 (New set point) from *0* to *1*, the Servo Drive starts positioning to the set target position.

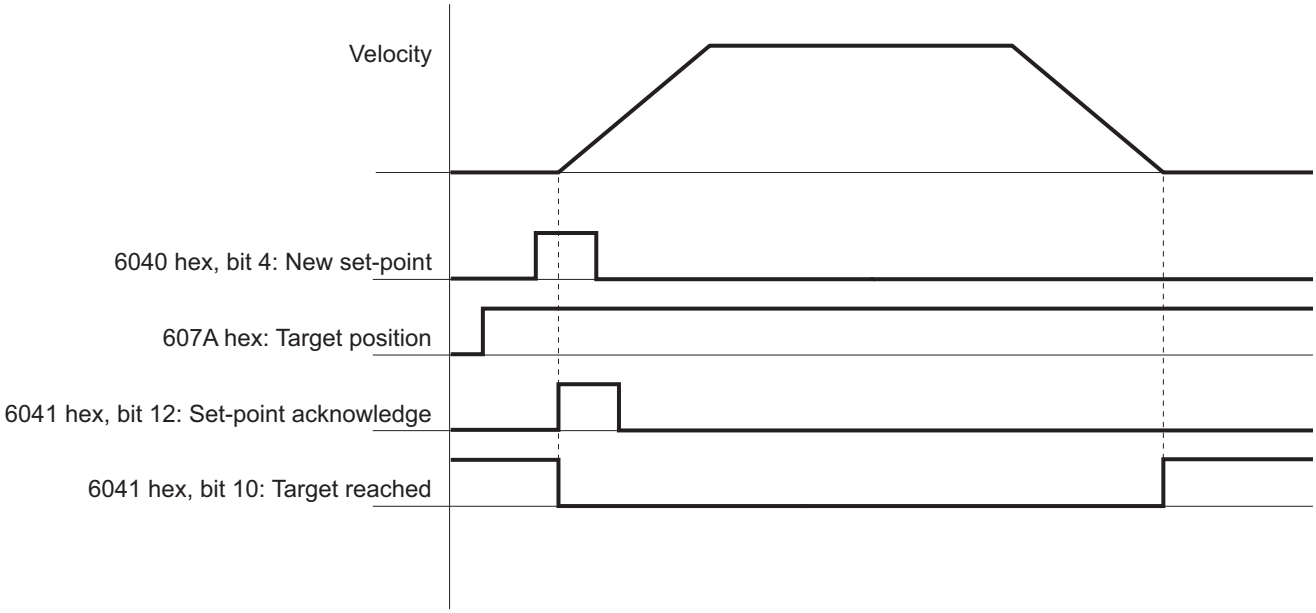

You can change the target value while PTP positioning is in progress.

During PTP positioning, when you change the **Target position** (607A hex) and **Profile velocity** (6081 hex) value and then change the **Controlword** (6040 hex) bit 4 (New set point) from *0* to *1*, the Servo Drive performs positioning with the changed value.

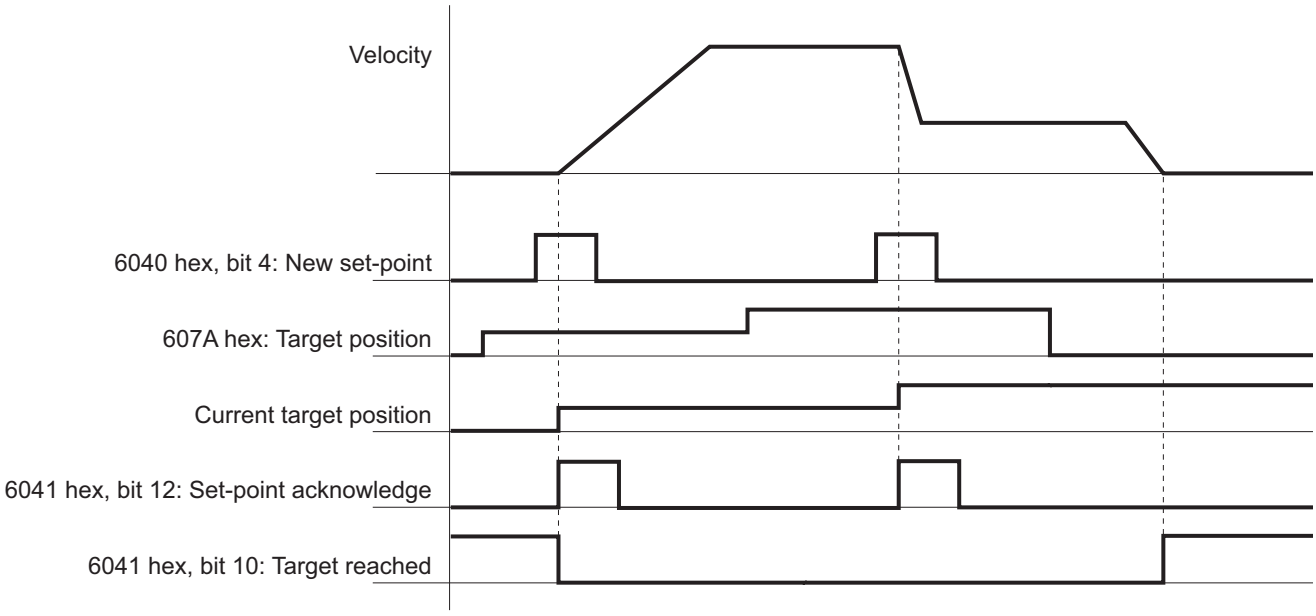

Precautions for Correct Use

Depending on the positional relationship between the position actual value and target position, operation is performed in the direction with a shorter travel distance.

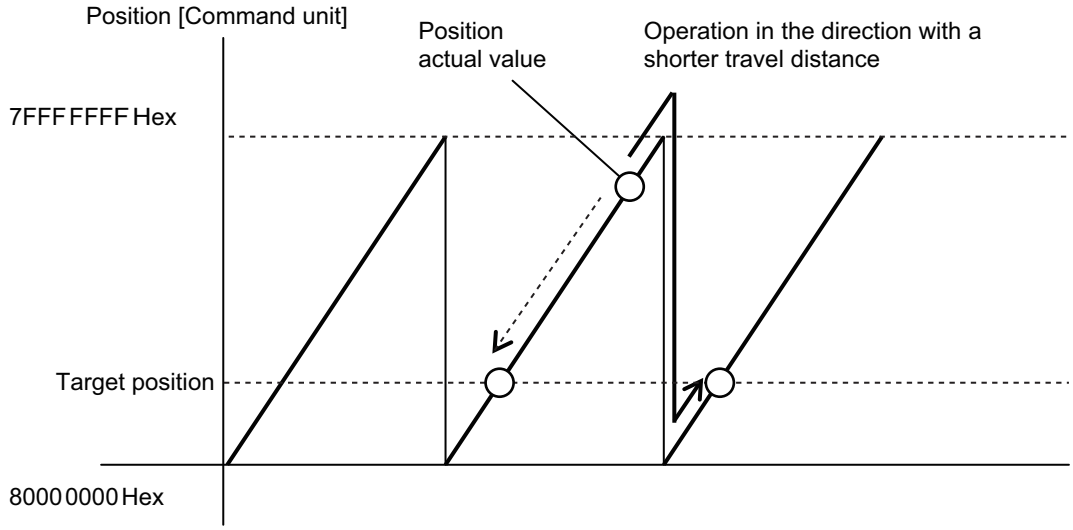

Controlword (6040 hex) in Profile Position Mode

The bits in Controlword used in the Profile position mode are explained below.

For the bits that are common to all modes, refer to *A-1 CiA 402 Drive Profile* on page A-2.

Bit	Name	Description
4	New set-point	Starts positioning at the rising edge, from *0* to *1*, of the signal. In this timing, the values of **Target position** (607A hex) and **Profile velocity** (6081 hex) are obtained.
5	Change set immediately	Always set to *1* (Change set immediately). If set to *0*, positioning does not occur due to a Command Warning.
6	Absolute/relative (abs/rel)	Always set to *0* (abs). If set to *1* (rel), positioning does not occur due to a Command Warning.
8	Halt	When set to *0*, positioning starts or continues. When set to *1*, positioning stops according to the **Halt option code** (605D hex) setting.
9	Change on Set-point	Unused for 1S-series Servo Drives.

Statusword (6041 hex) in Profile Position Mode

The bits in Statusword used in the Profile position mode are explained below.

Bit	Name	Value	Description
10	Target reached	0	Halt bit is 0: Positioning is not completed. Halt bit is 1: The axis is decelerating.
		1	Halt bit is 0: Positioning is completed. Halt bit is 1: The axis speed is zero.
12	Set-point acknowledge	0	Waiting for a new Target position.
		1	Ready to accept updates (overwriting) of the Target position.
13	Following error	0	No Following error occurred.
		1	A Following error occurred.

6-7 Profile Velocity Mode

In this mode of operation, the controller uses the path generation function (an operation profile calculation function) inside the Servo Drive to control the velocity. It executes path generation based on the target velocity, profile acceleration, profile deceleration, and other information.

The Profile velocity mode can be used when the communications period is 250 μs or more. If the communications period is less than 250 μs, a Command Error (Error No. 91.01) occurs.

The following diagram shows the configuration of the path generation function.

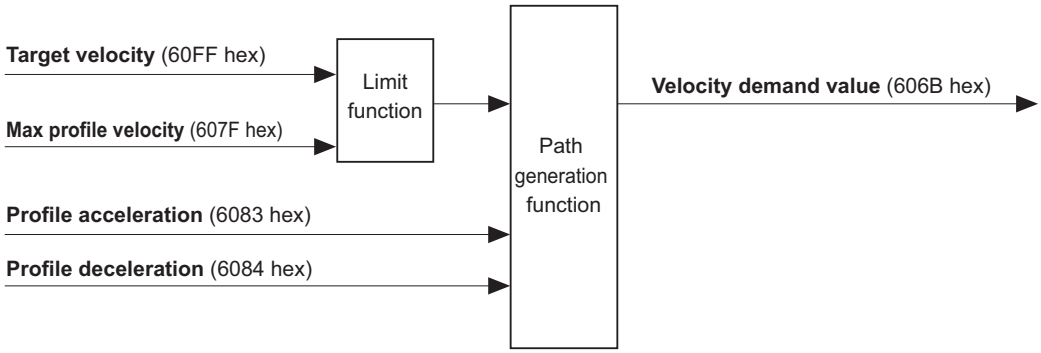

To use these objects, map them in the variable PDO mapping as appropriate.

Profile Velocity Mode Configuration

The following diagram shows the configuration of the Profile velocity mode.

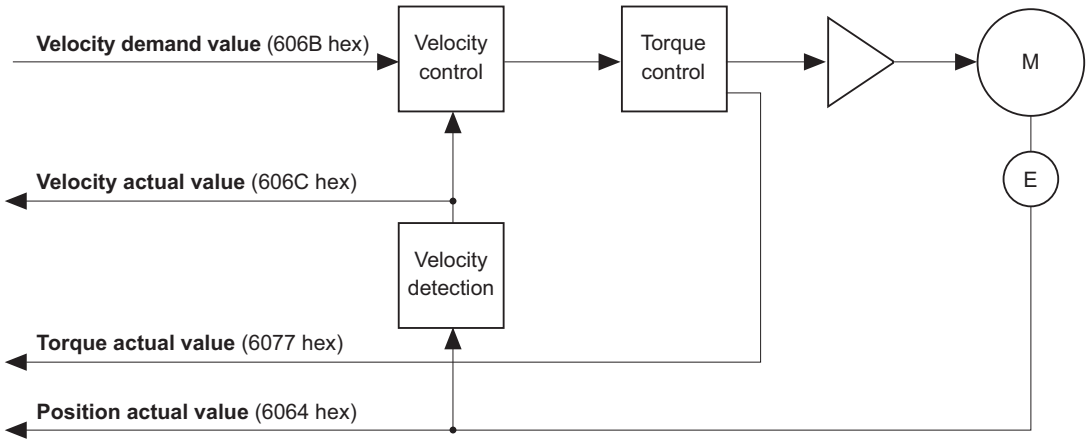

Related Objects

Index (hex)	Subindex (hex)	Name	Access	Size	Unit	Setting range	Default setting
6040	00	Controlword	W	U16	---	0000 to FFFF hex	0000 hex
6041	00	Statusword	R	U16	---	---	---
6064	00	Position actual value	R	INT32	Command unit	---	---
606B	00	Velocity demand value	R	INT32	Command unit/s	---	---
606C	00	Velocity actual value	R	INT32	Command unit/s	---	---
6077	00	Torque actual value	R	INT16	0.1%	---	---
607F	00	Max profile velocity	W	U32	Command unit/s	0 to 2,147,483,647	0
6083	00	Profile acceleration	W	U32	Command unit/s^2	1 to 2,147,483,647	125,000
6084	00	Profile deceleration	W	U32	Command unit/s^2	1 to 2,147,483,647	125,000
60FF	00	Target velocity	W	INT32	Command unit/s	-2,147,483,648 to 2,147,483,647	0

Description of Function

When you set the **Target velocity** (60FF hex), the Servo Drive starts acceleration/deceleration operation to the set target velocity.

You can change the target velocity while acceleration/deceleration is in progress.

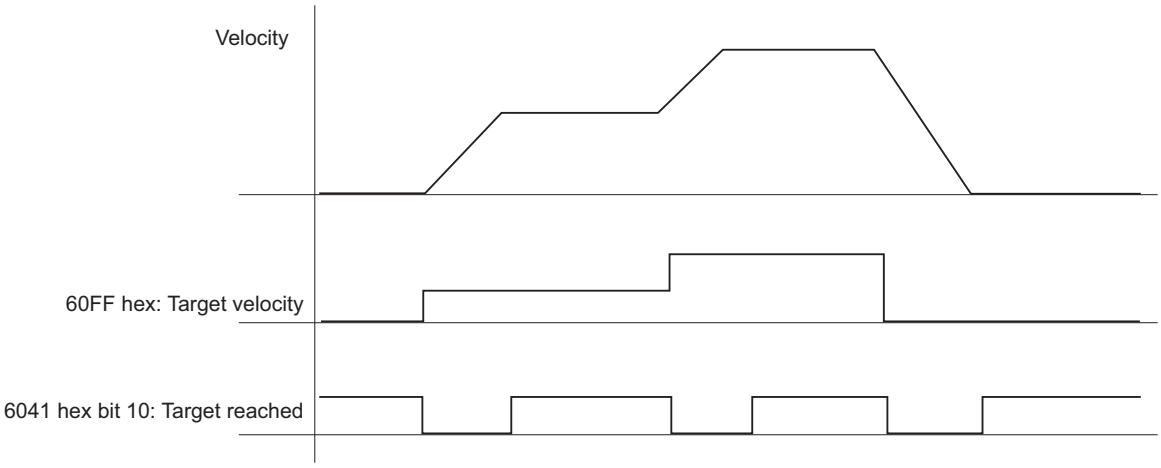

Controlword (6040 hex) in Profile Velocity Mode

The bits in Controlword used in the Profile position mode are explained below.

For the bits that are common to all modes, refer to *A-1 CiA 402 Drive Profile* on page A-2.

Bit	Name	Value	Description
4	Not used.	---	---
5	Not used.	---	---
6	Not used.	---	---
8	Halt	0	Velocity control starts or continues.
		1	Stop axis according to the **Halt option code** (605D hex).
9	Not used.	---	---

Statusword (6041 hex) in Profile Velocity Mode

The bits in Statusword used in the Profile position mode are explained below.

Bit	Name	Value	Description
10	Target reached	0	Target velocity not reached
		1	Target velocity reached
12	Speed	0	Zero speed not detected
		1	Zero speed detected
13	Not used.	0	---

6-8 Homing Mode

In this mode of operation, the Servo Drive has a path generation function (an operation profile calculation function) and it executes the homing operation in the Homing method specified from the controller.

When a controller is connected, the following two homing procedures are available depending on the controller specifications.

Procedure 1

Create a homing operation pattern in the controller, and provide the command to the Servo Drive in Cyclic synchronous position mode (csp).

When you use the controller to perform the homing operation in procedure 1, refer to the manual for the controller.

Procedure 2

Use the Homing mode of the Servo Drive. The controller specifies a homing method supported by the Servo Drive and commands the start of the homing operation.

The Homing mode can be used when the communications period is 250 μs or more. If the communications period is less than 250 μs, a Command Error (Error No. 91.01) occurs.

When you use the controller to perform the homing operation in procedure 2, refer to the manual for the controller and *A-1-5 Homing Mode Specifications* on page A-7.

Additional Information

Procedure 1 is used for the OMRON Machine Automation Controller NJ/NX-series CPU Unit, NY-series IPC Machine Controller, and Position Control Unit (Model: CJ1W-NC□8□). In this procedure, the Position Control Unit creates a homing operation pattern and provides the command to the Servo Drive in the Cyclic synchronous position mode (csp) to perform the homing operation.

6-9 Connecting with OMRON Controllers

This section describes the settings required to connect the Servo Drive with an OMRON controller.

Machine Automation Controller NJ/NX-series CPU Unit/IPC Machine Controller NY-series

The following tables show the setting values required to use the control functions of the controller.

If you change these settings, read and understand the relevant specifications in advance and set appropriate values.

● Common Settings

Index (hex)	Subindex (hex)	Name	Recom-mended setting	Description
3001	---	Machine	---	The gear ratio used by the Servo Drive is 1:1, and command units are set by the controller.
	05	Motor Revolutions	1	
	06	Shaft Revolutions	1	
3330	---	Torque Limit	---	If both PCL and NCL are OFF, the torque limit is controlled with the values of 60E0 hex and 60E1 hex that are mapped to a PDO.
	01	Switching Selection	2	
	05	Positive Torque Limit Value 2	5,000	Default setting = 500.0%
	06	Negative Torque Limit Value 2	5,000	Default setting = 500.0%
3A00	---	Homing	---	The value of offset used by the Servo Drive is *0*.
	06	Home Offset	0	
3B10	---	Drive Prohibition	---	Drive prohibition input is disabled for the Servo Drive, and this function is handled by the controller.
	01	Enable	0	
3B11	---	Software Position Limit	---	Disabled in both positive and negative directions.
	01	Enable Selection	0	
3B30	---	Touch Probe 1	---	Touch probe1 source is set to External Latch Input 1, and Touch probe 2 source is set to External Latch Input 2.
	01	Touch Probe 1 Source	1	
3B31	---	Touch Probe 2	---	Touch probe1 source is set to External Latch Input 1, and Touch probe 2 source is set to External Latch Input 2.
	01	Touch Probe 2 Source	2	
4020	---	Warning Customiza-tion	---	The warning is automatically cleared when the cause of the warning is eliminated.
	04	Warning Hold Selec-tion	0	
4510	---	Encoder	---	Used as the absolute encoder and the Abso-lute Encoder Counter Overflow is ignored.
	01	Operation Selection when Using Absolute Encoder	2	
4630	---	Positive Drive Prohibi-tion Input	---	The Positive Drive Prohibition Input is allo-cated to General Input 2 (IN2) with negative logic (NC contact).
	01	Port Selection	2	
	02	Logic Selection	1	

Index (hex)	Subindex (hex)	Name	Recommended setting	Description
4631	---	Negative Drive Prohibition Input	---	The Negative Drive Prohibition Input is allocated to General Input 3 (IN3) with negative logic (NC contact).
	01	Port Selection	3	
	02	Logic Selection	1	
4632	---	External Latch Input 1	---	The External Latch Input 1 is allocated to General Input 7 (IN7) with positive logic (NO contact).
	01	Port Selection	7	
	02	Logic Selection	0	
4633	---	External Latch Input 2	---	The External Latch Input 2 is allocated to General Input 8 (IN8) with positive logic (NO contact).
	01	Port Selection	8	
	02	Logic Selection	0	
4634	---	Home Proximity Input	---	The Home Proximity Input is allocated to General Input 4 (IN4) with positive logic (NO contact).
	01	Port Selection	4	
	02	Logic Selection	0	

● Settings for Configuring Ring Topology in EtherCAT Network

Index (hex)	Subindex (hex)	Name	Recommended setting	Description
2200	00	Communications Error Setting	2 or more	Set the value to 2 or more because one communications error occurs when the ring is disconnected or during the restoration. The default value is 1.

When you build a safety system using FSoE communications, you also need to set the following item. As for the detail, refer to the *NX-series Safety Control Unit User's Manual* (Cat. No. Z930).

Item	Recommended setting	Description
Watchdog Time of Safety Process Data Communications Settings	Auto set value + EtherCAT communications cycle × 2 or more*1	Make the value at least two communications cycles larger than the auto set value because one communications error occurs when the ring is disconnected or during the restoration.

*1. If EtherCAT communications cycle × 2 is less than 2 ms, add 2 ms or more to the auto set value.

Precautions for Correct Use

- Do not rotate the Servomotor at more than 2,147,483,647 [command unit] if the power supply of NJ/NX-series CPU Unit and NY-series IPC Machine Controller is OFF when you use the absolute encoder. When the power supply is turned ON, the CPU Unit cannot restore the present position.
- Do not rotate the Servomotor at more than 2,147,483,647 [command unit] if EtherCAT communications are not established with the NJ/NX-series CPU Unit or the NY-series IPC Machine Controller when you use the absolute encoder. When communications are established, the CPU Unit cannot restore the present position.

Position Control Unit (Model: CJ1W-NC□8□)

The following table shows the setting values required to use the control functions of the controller.

If you change these settings, read and understand the relevant specifications in advance and set appropriate values.

Index (hex)	Subindex (hex)	Name	Recom-mended setting	Description
3001	---	Machine	---	The gear ratio used by the Servo Drive is 1:1, and command units are set by the controller.
	05	Motor Revolutions	1	
	06	Shaft Revolutions	1	
3330	---	Torque Limit	---	If both PCL and NCL are ON, the torque limit is controlled with the values of 60E0 hex and 60E1 hex that are mapped to a PDO.
	01	Switching Selection	1	
	05	Positive Torque Limit Value	5,000	Default setting = 500.0%
	06	Negative Torque Limit Value	5,000	Default setting = 500.0%
3A00	---	Homing	---	The value of offset used by the Servo Drive is *0*.
	06	Home Offset	0	
3B10	---	Drive Prohibition	---	Drive prohibition input is disabled for the Servo Drive, and this function is handled by the controller.
	01	Enable	0	
3B11	---	Software Position Limit	---	Disabled in both positive and negative directions.
	01	Enable Selection	0	
3B30	---	Touch Probe 1	---	Touch probe1 source is set to External Latch Input 1, and Touch probe 2 source is set to External Latch Input 2.
	01	Touch Probe 1 Source	1	
3B31	---	Touch Probe 2	---	Touch probe1 source is set to External Latch Input 1, and Touch probe 2 source is set to External Latch Input 2.
	01	Touch Probe 2 Source	2	
4020	---	Warning Customization	---	The warning is automatically cleared when the cause of the warning is elimi-nated.
	04	Warning Hold Selection	0	
4510	---	Encoder	---	Used as the absolute encoder and the Absolute Encoder Counter Overflow is ignored.
	01	Operation Selection when Using Absolute Encoder	2	
4630	---	Positive Drive Prohibition Input	---	The Positive Drive Prohibition Input is allocated to General Input 2 (IN2) with negative logic (NC contact).
	01	Port Selection	2	
	02	Logic Selection	1	
4631	---	Negative Drive Prohibition Input	---	The Negative Drive Prohibition Input is allocated to General Input 3 (IN3) with Negative logic (NC contact).
	01	Port Selection	3	
	02	Logic Selection	1	
4632	---	External Latch Input 1	---	The External Latch Input 1 is allocated to General Input 7 (IN7) with positive logic (NO contact).*1
	01	Port Selection	7	
	02	Logic Selection	0	
4633	---	External Latch Input 2	---	The External Latch Input 2 is allocated to General Input 8 (IN8) with positive logic (NO contact).*1
	01	Port Selection	8	
	02	Logic Selection	0	
4634	---	Home Proximity Input	---	The Home Proximity Input is allocated to General Input 4 (IN4) with positive logic (NO contact).
	01	Port Selection	4	
	02	Logic Selection	0	

*1. CJ1W-NC□8□ uses the latch signals as follows:
External Latch Input 1: Origin Input
External Latch Input 2: Interrupt Input

Precautions for Correct Use

To use the interrupt feeding function of the Position Control Unit (CJ1W-NC□8□), set the **Basic Functions – Control Method Selection** servo parameter (3000-03 hex) to *0* (ODF control).

7

Applied Functions

This section provides the outline and settings of the applied functions such as electronic gear and gain switching.

7-1 General-purpose Input Signals 7-3
7-1-1 Objects Requiring Settings 7-4
7-1-2 Default Setting 7-6
7-1-3 Function Input Details 7-7
7-2 General-purpose Output Signals 7-8
7-2-1 Objects Requiring Settings 7-8
7-2-2 Default Setting 7-10
7-2-3 Function Output Details 7-11
7-3 Drive Prohibition Functions 7-15
7-3-1 Objects Requiring Settings 7-15
7-3-2 Description of Operation 7-16
7-4 Software Position Limit Functions 7-17
7-4-1 Operating Conditions 7-17
7-4-2 Objects Requiring Settings 7-17
7-4-3 Description of Operation 7-18
7-5 Backlash Compensation 7-20
7-5-1 Operating Conditions 7-20
7-5-2 Objects Requiring Settings 7-20
7-5-3 Description of Operation 7-21
7-6 Brake Interlock 7-22
7-6-1 Objects Requiring Settings 7-22
7-6-2 Description of Operation 7-24
7-6-3 Operation Timing 7-25
7-7 Electronic Gear Function 7-29
7-7-1 Objects Requiring Settings 7-29
7-7-2 Operation Example 7-29
7-8 Torque Limit Switching 7-30
7-8-1 Operating Conditions 7-30
7-8-2 Objects Requiring Settings 7-30
7-8-3 Torque Limit Switching Method 7-31

7-9 Soft Start 7-32
7-9-1 Objects Requiring Settings 7-32
7-9-2 Soft Start Acceleration/Deceleration Time 7-32
7-9-3 Velocity Command First-order Lag Filter 7-33
7-10 Gain Switching Function 7-34
7-10-1 Objects Requiring Settings 7-34
7-10-2 Mode Selection 7-36
7-10-3 Gain Switching in Position Control 7-37
7-11 Touch Probe Function (Latch Function) 7-38
7-11-1 Related Objects 7-38
7-11-2 Trigger Signal Settings 7-40
7-11-3 Operation Sequence 7-41
7-12 Encoder Dividing Pulse Output Function 7-42
7-12-1 Objects Requiring Settings 7-43
7-12-2 Dividing Ratio 7-43
7-12-3 Output Reverse Selection 7-44
7-12-4 Z-phase Output 7-44
7-13 Dynamic Brake 7-45
7-13-1 Operating Conditions 7-45
7-13-2 Objects Requiring Settings 7-45
7-13-3 Description of Operation 7-46
7-14 Command Compensation Function for Communications Error 7-49
7-14-1 Operating Conditions 7-49
7-14-2 Operation Example 7-49

7-1 General-purpose Input Signals

The 1S-series Servo Drive provides 8 ports for general-purpose input signals to which you can allocate function inputs in the Control I/O Connector (CN1). You can also set the logic for input signals that can be allocated. Note that you cannot allocate more than one function to the same general-purpose input signal.

Refer to *3-1-5 Control I/O Connector (CN1) Specifications* on page 3-14 for I/O signal connection and external signal processing.

General Input 7 (IN7) and 8 (IN8) are high-speed inputs. Use these inputs for functions that require high precision, such as the latch input.

Precautions for Correct Use

The signal status must be held for at least 125 μs for high-speed inputs and at least 2 ms for other inputs.

Function Inputs That Can Be Allocated

Function input name	Symbol
Positive Drive Prohibition Input	POT
Negative Drive Prohibition Input	NOT
Error Stop Input	ESTP
External Latch Input 1	EXT1
External Latch Input 2	EXT2
Home Proximity Input	DEC
Positive Torque Limit Input	PCL
Negative Torque Limit Input	NCL
Monitor Input 1	MON1
Monitor Input 2	MON2
Monitor Input 3	MON3
Monitor Input 4	MON4
Monitor Input 5	MON5
Monitor Input 6	MON6
Monitor Input 7	MON7
Monitor Input 8	MON8

7-1-1 Objects Requiring Settings

Index (hex)	Subindex (hex)	Name	Description	Reference
4630	---	Positive Drive Prohibition Input	Sets the input signal allocation and logic.	P. 9-117
	01	Port Selection	Selects the port to be allocated. 0: No allocation 1: General Input 1 (IN1) 2: General Input 2 (IN2) 3: General Input 3 (IN3) 4: General Input 4 (IN4) 5: General Input 5 (IN5) 6: General Input 6 (IN6) 7: General Input 7 (IN7) 8: General Input 8 (IN8)	
	02	Logic Selection	Sets the positive logic (NO contact) or negative logic (NC contact). 0: Positive logic (NO contact) 1: Negative logic (NC contact)	
4631	---	Negative Drive Prohibition Input	Sets the input signal allocation and logic.	P. 9-117
	01	Port Selection	The function is the same as 4630-01 hex.	
	02	Logic Selection	The function is the same as 4630-02 hex.	
4632	---	External Latch Input 1	Sets the input signal allocation and logic.	P. 9-117
	01	Port Selection	The function is the same as 4630-01 hex.	
	02	Logic Selection	The function is the same as 4630-02 hex.	
4633	---	External Latch Input 2	Sets the input signal allocation and logic.	P. 9-118
	01	Port Selection	The function is the same as 4630-01 hex.	
	02	Logic Selection	The function is the same as 4630-02 hex.	
4634	---	Home Proximity Input	Sets the input signal allocation and logic.	P. 9-118
	01	Port Selection	The function is the same as 4630-01 hex.	
	02	Logic Selection	The function is the same as 4630-02 hex.	
4635	---	Positive Torque Limit Input	Sets the input signal allocation and logic.	P. 9-118
	01	Port Selection	The function is the same as 4630-01 hex.	
	02	Logic Selection	The function is the same as 4630-02 hex.	
4636	---	Negative Torque Limit Input	Sets the input signal allocation and logic.	P. 9-119
	01	Port Selection	The function is the same as 4630-01 hex.	
	02	Logic Selection	The function is the same as 4630-02 hex.	
4637	---	Error Stop Input	Sets the input signal allocation and logic.	P. 9-119
	01	Port Selection	The function is the same as 4630-01 hex.	
	02	Logic Selection	The function is the same as 4630-02 hex.	
4638	---	Monitor Input 1	Sets the input signal allocation and logic.	P. 9-119
	01	Port Selection	The function is the same as 4630-01 hex.	
	02	Logic Selection	The function is the same as 4630-02 hex.	
4639	---	Monitor Input 2	Sets the input signal allocation and logic.	P. 9-120
	01	Port Selection	The function is the same as 4630-01 hex.	
	02	Logic Selection	The function is the same as 4630-02 hex.	

Index (hex)	Subindex (hex)	Name	Description	Refer-ence
463A	---	Monitor Input 3	Sets the input signal allocation and logic.	P. 9-120
	01	Port Selection	The function is the same as 4630-01 hex.	
	02	Logic Selection	The function is the same as 4630-02 hex.	
463B	---	Monitor Input 4	Sets the input signal allocation and logic.	P. 9-120
	01	Port Selection	The function is the same as 4630-01 hex.	
	02	Logic Selection	The function is the same as 4630-02 hex.	
463C	---	Monitor Input 5	Sets the input signal allocation and logic.	P. 9-121
	01	Port Selection	The function is the same as 4630-01 hex.	
	02	Logic Selection	The function is the same as 4630-02 hex.	
463D	---	Monitor Input 6	Sets the input signal allocation and logic.	P. 9-121
	01	Port Selection	The function is the same as 4630-01 hex.	
	02	Logic Selection	The function is the same as 4630-02 hex.	
463E	---	Monitor Input 7	Sets the input signal allocation and logic.	P. 9-121
	01	Port Selection	The function is the same as 4630-01 hex.	
	02	Logic Selection	The function is the same as 4630-02 hex.	
463F	---	Monitor Input 8	Sets the input signal allocation and logic.	P. 9-122
	01	Port Selection	The function is the same as 4630-01 hex.	
	02	Logic Selection	The function is the same as 4630-02 hex.	

7-1-2 Default Setting

The allocations of the default input signals are as follows.

Index (hex)	Name	Default setting			
		Subindex 01 hex Port Selection		Subindex 02 hex Logic Selection	
		Set value	Status	Set value	Status
4630	Positive Drive Prohibition Input	2	General Input 2 (IN2)	1	Negative logic (NC contact)
4631	Negative Drive Prohibition Input	3	General Input 3 (IN3)	1	Negative logic (NC contact)
4632	External Latch Input 1	7	General Input 7 (IN7)	0	Positive logic (NO contact)
4633	External Latch Input 2	8	General Input 8 (IN8)	0	Positive logic (NO contact)
4634	Home Proximity Input	4	General Input 4 (IN4)	0	Positive logic (NO contact)
4635	Positive Torque Limit Input	0	No allocation	0	Positive logic (NO contact)
4636	Negative Torque Limit Input	0	No allocation	0	Positive logic (NO contact)
4637	Error Stop Input	1	General Input 1 (IN1)	1	Negative logic (NC contact)
4638	Monitor Input 1	5	General Input 5 (IN5)	0	Positive logic (NO contact)
4639	Monitor Input 2	6	General Input 6 (IN6)	0	Positive logic (NO contact)
463A	Monitor Input 3	0	No allocation	0	Positive logic (NO contact)
463B	Monitor Input 4	0	No allocation	0	Positive logic (NO contact)
463C	Monitor Input 5	0	No allocation	0	Positive logic (NO contact)
463D	Monitor Input 6	0	No allocation	0	Positive logic (NO contact)
463E	Monitor Input 7	0	No allocation	0	Positive logic (NO contact)
463F	Monitor Input 8	0	No allocation	0	Positive logic (NO contact)

7-1-3 Function Input Details

This section explains the function inputs that can be allocated to the general-purpose inputs.

Error Stop Input (ESTP)

- This signal is used to forcibly generate an error to stop motor rotation from an external device.
- If the Error Stop Input (ESTP) signal turns ON during motor rotation, the Servomotor stops according to the setting in the **Stop Selection** - **Fault Reaction Option Code** (3B20-04 hex).
- If the Error Stop Input (ESTP) signal turns ON when the Servomotor is energized, the Error Stop Input (Error No. 87.00) will occur.

Positive Drive Prohibition Input (POT) and Negative Drive Prohibition Input (NOT)

- These two input signals prohibit the positive and negative drive (over-travel).
- When these terminals are short-circuited (default setting), the Servo Drive can drive the Servomotor in each rotation direction.
- In the drive prohibition state, the Servo Drive does not enter an error state.
- To use this function, set **Drive Prohibition - Enable** (3B10-01 hex) to *1*.
- When **Drive Prohibition - Enable** (3B10-01 hex) is set to *1*, you can select the operation at a drive prohibition input in **Drive Prohibition - Stop Selection** (3B10-02 hex).

Home Proximity Input (DEC)

- This is the deceleration signal for homing.
- If the Home Proximity Input turns ON while the Servomotor is running at the **Speed During Search for Switch** (3A00-03 hex), it will decelerate to **Homing** - **Speed During Search for Zero** (3A00-04 hex).

External Latch Input (EXT1 and EXT2)

- These are the external input signals to latch the present position.
- The encoder position data is obtained at the rising edge when the External Latch Input is turned ON.

Monitor Inputs (MON1 to MON8)

- These can be used as general-purpose monitor inputs.
- The general-purpose monitor inputs do not affect operation, and they can be monitored from the host controller.

Positive Torque Limit Input (PCL) and Negative Torque Limit Input (NCL)

- The Positive Torque Limit Input (PCL) is used to switch the torque limit between the **Positive torque limit value** (60E0 hex or 3330-03 hex) and **Positive Torque Limit Value 2** (3330-05 hex).
- The Negative Torque Limit Input (NCL) is used to switch the torque limit between the **Negative torque limit value** (60E1 hex or 3330-04 hex) and **Negative Torque Limit Value 2** (3330-06 hex).
- Use the **Torque Limit** - **Switching Selection** (3330-01 hex) to select a method to switch the torque limit.

7-2 General-purpose Output Signals

The 1S-series Servo Drive provides 3 ports for general-purpose output signals to which you can allocate function outputs in the Control I/O Connector (CN1). You can also set the logic for output signals that can be allocated. Note that you cannot allocate more than one function to the same general-purpose output signal.

Refer to *3-1-5 Control I/O Connector (CN1) Specifications* on page 3-14 for I/O signal connection and external signal processing.

Function Outputs That Can Be Allocated

Function output name	Symbol
Error Output	ERR
Servo Ready Output	READY
Positioning Completion Output 1	INP1
Positioning Completion Output 2	INP2
Velocity Attainment Detection Output	TGON
Torque Limit Output	TLMT
Zero Speed Detection Output	ZSP
Velocity Conformity Output	VCMP
Warning Output 1	WARN1
Warning Output 2	WARN2
Velocity Limiting Output	VLMT
Error Clear Attribute Output	ERR-ATB
Remote Output 1	R-OUT1
Remote Output 2	R-OUT2
Remote Output 3	R-OUT3
Zone Notification Output 1	ZONE1
Zone Notification Output 2	ZONE2
Position Command Status Output	PCMD
Distribution Completed Output	DEN
External Brake Interlock Output	EXTBKIR

7-2-1 Objects Requiring Settings

Index (hex)	Subindex (hex)	Name	Description	Reference
4650	---	Error Output	Sets the output signal allocation and logic.	P. 9-124
	01	Port Selection	Selects the port to be allocated. bit 0: General Output 1 (OUT1) bit 1: General Output 2 (OUT2) bit 2: General Output 3 (OUT3) 0: Not allocated 1: Allocated	
	02	Logic Selection	1: Negative logic (NC contact)	

Index (hex)	Subindex (hex)	Name	Description	Reference
4651	---	Servo Ready Output	Sets the output signal allocations and logic.	P. 9-124
	01	Port Selection	Selects the port to be allocated. bit 0: General Output 1 (OUT1) bit 1: General Output 2 (OUT2) bit 2: General Output 3 (OUT3) 0: Not allocated 1: Allocated	
	02	Logic Selection	Sets the positive logic (NO contact) or negative logic (NC contact). 0: Positive logic (NO contact) 1: Negative logic (NC contact)	
4652	---	Positioning Completion Output 1	Sets the output signal allocation and logic.	P. 9-124
	01	Port Selection	The function is the same as 4651-01 hex.	
	02	Logic Selection	The function is the same as 4651-02 hex.	
4653	---	Positioning Completion Output 2	Sets the output signal allocation and logic.	P. 9-125
	01	Port Selection	The function is the same as 4651-01 hex.	
	02	Logic Selection	The function is the same as 4651-02 hex.	
4654	---	Velocity Attainment Detection Output	Sets the output signal allocation and logic.	P. 9-125
	01	Port Selection	The function is the same as 4651-01 hex.	
	02	Logic Selection	The function is the same as 4651-02 hex.	
4655	---	Torque Limit Output	Sets the output signal allocation and logic.	P. 9-125
	01	Port Selection	The function is the same as 4651-01 hex.	
	02	Logic Selection	The function is the same as 4651-02 hex.	
4656	---	Zero Speed Detection Output	Sets the output signal allocation and logic.	P. 9-126
	01	Port Selection	The function is the same as 4651-01 hex.	
	02	Logic Selection	The function is the same as 4651-02 hex.	
4657	---	Velocity Conformity Output	Sets the output signal allocation and logic.	P. 9-126
	01	Port Selection	The function is the same as 4651-01 hex.	
	02	Logic Selection	The function is the same as 4651-02 hex.	
4658	---	Warning Output 1	Sets the output signal allocation and logic.	P. 9-126
	01	Port Selection	The function is the same as 4651-01 hex.	
	02	Logic Selection	The function is the same as 4651-02 hex.	
4659	---	Warning Output 2	Sets the output signal allocation and logic.	P. 9-127
	01	Port Selection	The function is the same as 4651-01 hex.	
	02	Logic Selection	The function is the same as 4651-02 hex.	
465A	---	Velocity Limiting Output	Sets the output signal allocation and logic.	P. 9-127
	01	Port Selection	The function is the same as 4651-01 hex.	
	02	Logic Selection	The function is the same as 4651-02 hex.	
465B	---	Error Clear Attribute Output	Sets the output signal allocation and logic.	P. 9-127
	01	Port Selection	The function is the same as 4651-01 hex.	
	02	Logic Selection	The function is the same as 4651-02 hex.	
465C	---	Remote Output 1	Sets the output signal allocation and logic.	P. 9-128
	01	Port Selection	The function is the same as 4651-01 hex.	
	02	Logic Selection	The function is the same as 4651-02 hex.	
465D	---	Remote Output 2	Sets the output signal allocation and logic.	P. 9-128
	01	Port Selection	The function is the same as 4651-01 hex.	
	02	Logic Selection	The function is the same as 4651-02 hex.	

Index (hex)	Subindex (hex)	Name	Description	Reference
465E	---	Remote Output 3	Sets the output signal allocation and logic.	P. 9-128
	01	Port Selection	The function is the same as 4651-01 hex.	
	02	Logic Selection	The function is the same as 4651-02 hex.	
465F	---	Zone Notification Output 1	Sets the output signal allocation and logic.	P. 9-129
	01	Port Selection	The function is the same as 4651-01 hex.	
	02	Logic Selection	The function is the same as 4651-02 hex.	
4660	---	Zone Notification Output 2	Sets the output signal allocation and logic.	P. 9-129
	01	Port Selection	The function is the same as 4651-01 hex.	
	02	Logic Selection	The function is the same as 4651-02 hex.	
4661	---	Position Command Status Output	Sets the output signal allocation and logic.	P. 9-129
	01	Port Selection	The function is the same as 4651-01 hex.	
	02	Logic Selection	The function is the same as 4651-02 hex.	
4662	---	Distribution Completed Output	Sets the output signal allocation and logic.	P. 9-130
	01	Port Selection	The function is the same as 4651-01 hex.	
	02	Logic Selection	The function is the same as 4651-02 hex.	
4663	---	External Brake Interlock Output	Sets the output signal allocation and logic.	P. 9-130
	01	Port Selection	Selects the port to be allocated. If this function is not allocated, it is output to the brake output (BKIR). bit 0: General Output1 (OUT1) bit 1: General Output2 (OUT2) bit 2: General Output3 (OUT3) bit 31: Safe Brake Control (SBC) Output 0: Not allocated 1: Allocated	
	02	Logic Selection	0: Positive logic (NO contact)	

7-2-2 Default Setting

The allocations of the default output signals are as follows.

Index (hex)	Name	Default setting			
		Subindex 01 hex Port Selection		Subindex 02 hex Logic Selection	
		Set value	Status	Set value	Status
4650	Error Output	0	No allocation	1	Negative logic (NC contact)
4651	Servo Ready Output	1	General Output 1 (OUT1)	0	Positive logic (NO contact)
4652	Positioning Completion Output 1	0	No allocation	0	Positive logic (NO contact)
4653	Positioning Completion Output 2	0	No allocation	0	Positive logic (NO contact)
4654	Velocity Attainment Detection Output	0	No allocation	0	Positive logic (NO contact)
4655	Torque Limit Output	0	No allocation	0	Positive logic (NO contact)
4656	Zero Speed Detection Output	0	No allocation	0	Positive logic (NO contact)

Index (hex)	Name	Default setting			
		Subindex 01 hex Port Selection		Subindex 02 hex Logic Selection	
		Set value	Status	Set value	Status
4657	Velocity Conformity Output	0	No allocation	0	Positive logic (NO contact)
4658	Warning Output 1	0	No allocation	0	Positive logic (NO contact)
4659	Warning Output 2	0	No allocation	0	Positive logic (NO contact)
465A	Velocity Limiting Output	0	No allocation	0	Positive logic (NO contact)
465B	Error Clear Attribute Output	0	No allocation	0	Positive logic (NO contact)
465C	Remote Output 1	2	General Output 2 (OUT2)	0	Positive logic (NO contact)
465D	Remote Output 2	4	General Output 3 (OUT3)	0	Positive logic (NO contact)
465E	Remote Output 3	0	No allocation	0	Positive logic (NO contact)
465F	Zone Notification Output 1	0	No allocation	0	Positive logic (NO contact)
4660	Zone Notification Output 2	0	No allocation	0	Positive logic (NO contact)
4661	Position Command Status Output	0	No allocation	0	Positive logic (NO contact)
4662	Distribution Completed Output	0	No allocation	0	Positive logic (NO contact)
4663	External Brake Interlock Output	0	No allocation	0	Positive logic (NO contact)

7-2-3 Function Output Details

This section explains the function outputs that can be allocated to the general-purpose outputs.

● Error Output (ERR)

- This output is turned OFF when the Servo Drive detects an error.
- This output is OFF when the power supply is turned ON, but the output turns ON when the Servo Drive's initial processing is completed.

● Servo Ready Output (READY)

- This output signal indicates the Servo Drive is ready to supply power to the Servomotor.
- It turns ON when no error is detected after the main circuit power supply turns ON.

● Position Completion Output (INP1 and INP2)

- INP1 will turn ON when the following error is less than or equal to **Positioning Completion Notification - Position Window** (3B51-01 hex).
- INP2 output will turn ON as specified in the **Positioning Completion Notification 2 - Notification Condition** (3B52-02 hex).
- This output remains OFF in controls other than position control.

Velocity Attainment Detection Output (TGON)

- This output turns ON when the motor rotation speed exceeds the value that is set in the **Speed Detection Function** - **Velocity Attainment Detection Level** (3B60-01 hex).
- The output is effective both in positive and negative directions regardless the actual direction in which the motor rotates.
- The detection level has a hysteresis of 10 r/min.

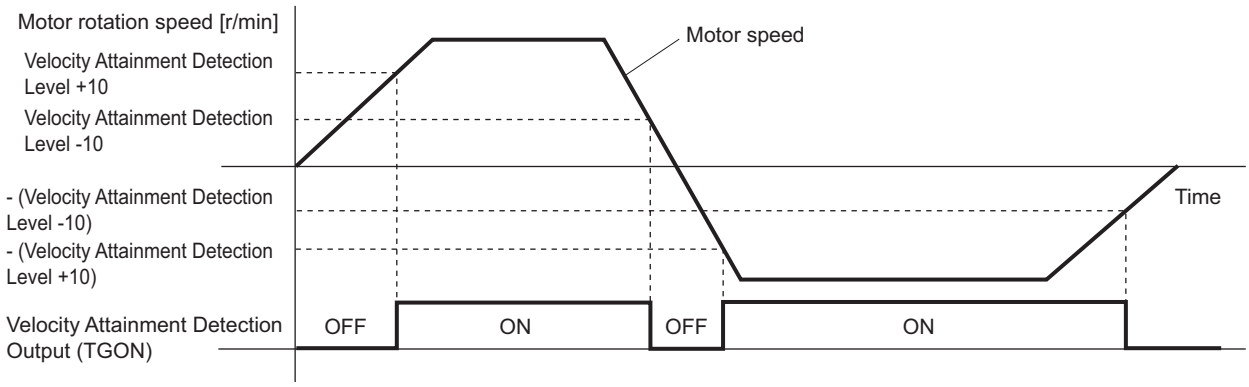

Torque Limit Output (TLMT)

This output turns ON when the output torque reaches the value set in the followings.

- **Max torque** (6072 hex or 3330-02 hex)
- **Positive torque limit value** (60E0 hex or 3330-03 hex)
- **Negative torque limit value** (60E1 hex or 3330-04 hex)
- **Positive Torque Limit Value 2** (3330-05 hex)
- **Negative Torque Limit Value 2** (3330-06 hex)

Zero Speed Detection Output (ZSP)

- This output turns ON when the motor rotation speed goes below the value that is set in the **Speed Detection Function** - **Zero Speed Detection Level** (3B60-02 hex).
- The output is effective both in positive and negative directions regardless the actual direction in which the motor rotates.
- The detection level has a hysteresis of 10 r/min.

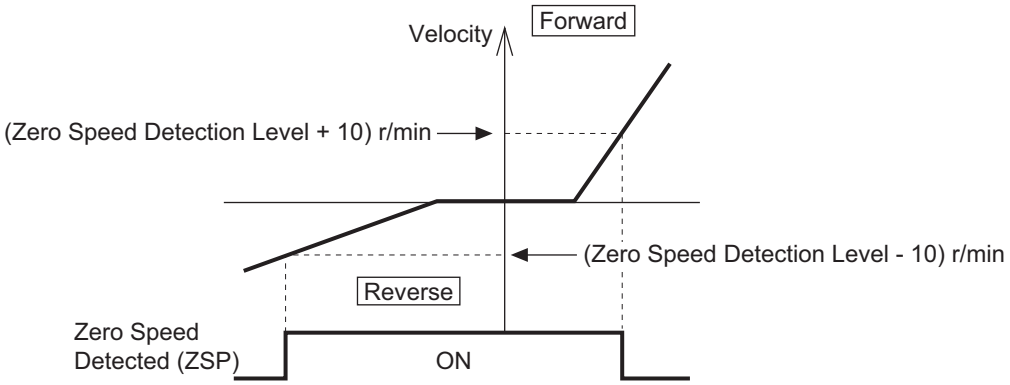

Velocity Conformity Output (VCMP)

- This output turns ON when the motor speed conforms to the command velocity.
- The velocity conformity is determined when the difference between the velocity command inside the Servo Drive before acceleration or deceleration process and the motor rotation speed is within the range set in the **Speed Detection Function** - **Velocity Conformity Detection Range** (3B60-03 hex).
- The detection range has a hysteresis of 10 r/min.
- This output remains OFF in controls other than velocity control.

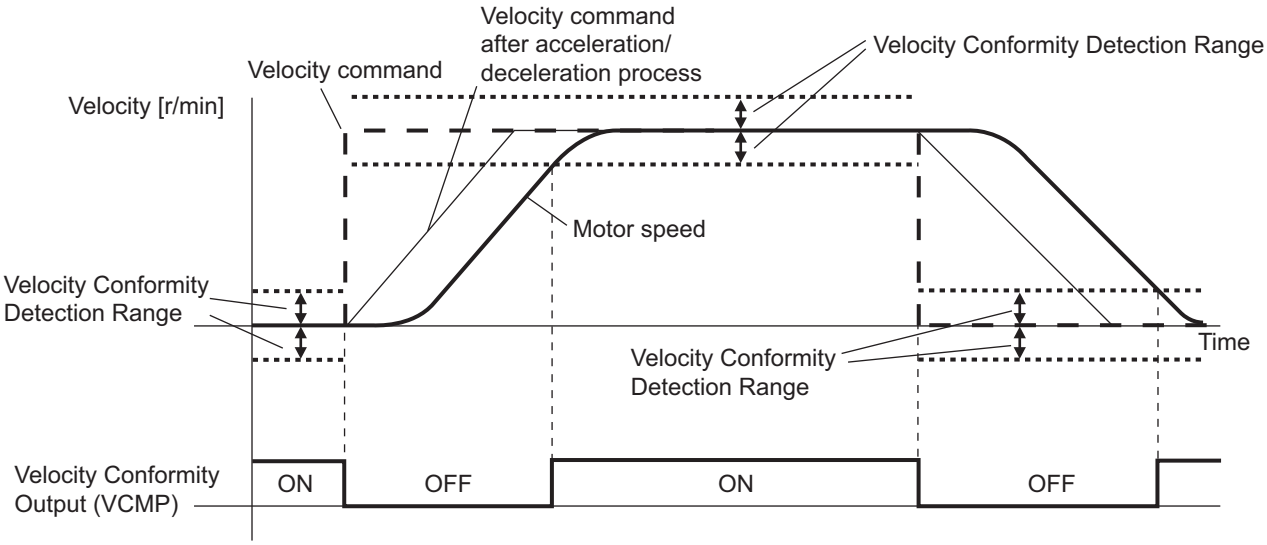

Warning Output (WARN1 and WARN2)

- The Warning Output 1 (WARN1) turns ON when the warning that is set in **Warning Output 1 Setting** (4021 hex) is detected.
- The Warning Output 2 (WARN2) turns ON when the warning that is set in **Warning Output 2 Setting** (4022 hex) is detected.

Position Command Status Output (PCMD)

- This output turns ON when a position command is issued in the position control.
- It is recognized that there is a position command when the command position changes from the last one.

Velocity Limiting Output (VLMT)

- This output turns ON when the motor speed reaches the following limit values.

a) Maximum motor speed

b) **Velocity Limit in Torque Control** - **Velocity Limit Value** (3031-01 hex)

c) **Max profile velocity** (607F hex)

- This output remains OFF in controls other than torque control.

Error Clear Attribute Output (ERR-ATB)

- This output turns ON when an error that can be reset occurs.

Remote Output (R-OUT1 to R-OUT3)

- Remote Output 1 (R-OUT1) turns ON and OFF according to the value of bit 16 in the **Digital outputs** (60FE hex).
- Remote Output 2 (R-OUT2) turns ON and OFF according to the value of bit 17 in the **Digital outputs** (60FE hex).
- Remote Output 3 (R-OUT3) turns ON and OFF according to the value of bit 18 in the **Digital outputs** (60FE hex).

Zone Notification Output (ZONE1 and ZONE2)

- Zone Notification Output 1 turns ON when the present position is within the range between **Lower Limit** (3B40-01 hex) and **Upper Limit** (3B40-02 hex) of **Zone Notification 1**.
- Zone Notification Output 2 turns ON when the present position is within the range between **Lower Limit** (3B41-01 hex) and **Upper Limit** (3B41-02 hex) of **Zone Notification 2**.
- The Zone Notification Output is performed when home is defined. This output is always OFF when home is undefined.

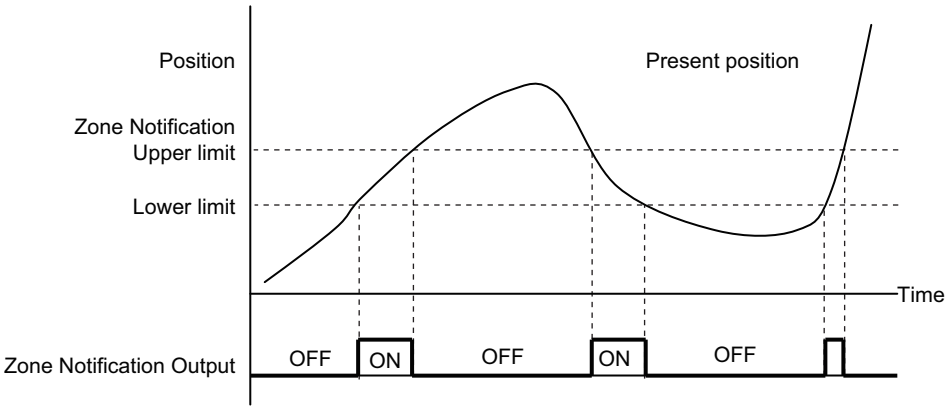

Distribution Completed Output (DEN)

- This output turns ON when the command position inside the Servo Drive reaches the target position.

External Brake Interlock Output (EXTBKIR)

- The external brake interlock turns ON while the brake is released.

7-3 Drive Prohibition Functions

If the Positive Drive Prohibition Input (POT) or the Negative Drive Prohibition Input (NOT) is active, the motor will stop rotating.

You can thus prevent the motor from rotation outside of the movement range of the device by using limit inputs from the device connected to the Servo Drive.

7-3-1 Objects Requiring Settings

Index (hex)	Subindex (hex)	Name	Description	Reference
3B10	---	Drive Prohibition	Sets the drive prohibition function.	P. 9-61
	01	Enable	Selects whether to enable or disable the drive prohibition function. 0: Drive prohibition disabled 1: Drive prohibition enabled	P. 9-61
	02	Stop Selection	Selects the operation when Positive Drive Prohibition or Negative Drive Prohibition is enabled.	P. 9-61
3B21	---	Deceleration Stop	Sets the operation during deceleration stop.	P. 9-66
	01	Torque	Sets the torque limit value during deceleration stop. Setting range: *0.1% to 500.0%*	P. 9-66
4630	---	Positive Drive Prohibition Input	Sets the input signal allocation and logic.	P. 9-117
	01	Port Selection	Selects the port to be allocated.	
	02	Logic Selection	Select Positive logic (NO contact) or Negative logic (NC contact).	
4631	---	Negative Drive Prohibition Input	Sets the input signal allocation and logic.	P. 9-117
	01	Port Selection	Selects the port to be allocated.	
	02	Logic Selection	Select Positive logic (NO contact) or Negative logic (NC contact).	

7-3-2 Description of Operation

If **Drive Prohibition - Enable** (3B10-01 hex) is set to *1* (Drive Prohibition Enabled), when the Servo Drive detects that the Positive Drive Prohibition Input (POT) or Negative Drive Prohibition Input (NOT) is active, it stops the Servomotor according to the method specified in **Stop Selection** (3B10-02 hex).

Stop Selection set value	During deceleration*1		After stopping	
	Deceleration method	Following error	State after stopping	Following error
2	The deceleration stop torque is used.*2	Clear	Lock at the stop position	Cleared at the stop and held after stopping
4*3	Stop according to the setting of Fault reaction option code	---	Stop according to the setting of Fault reaction option code	---

*1. During deceleration means the period in which the running motor decelerates and its speed reaches 30 r/min or lower. Once the motor speed reaches 30 r/min or lower and the operation changes to after stopping, the following operation conforms to the description for the state after stopping, regardless of the motor speed.

*2. When the deceleration stop torque is used to stop the Servomotor, the operation direction may be reversed if the inertia is small and the operation speed is slow.

*3. If you set **Stop Selection** to *4*, a Drive Prohibition Detected (Error No. 38.01) occurs due to detection of the drive prohibition input.

Precautions for Correct Use

- Because the deceleration stop causes the Servomotor to decelerate quickly, in the position control mode, the following error may become large momentarily. This results in an Excessive Position Deviation Error (Error No. 24.00). If this error occurs, set the **Position Detection Function** - **Following Error Window** (3B50-05 hex) to an appropriate value.
- A load on the vertical axis and so forth may fall due to its own weight when the Drive Prohibition Input is ON. To prevent the load from falling, set **Drive Prohibition - Stop Selection** (3B10-02 hex) to *2* so that the Servomotor decelerates with the deceleration stop torque and stops with the servo lock, or use the host controller to limit the operation instead of this function.
- A Command Warning (Error No. B1.00) will occur if a command is given in the drive prohibition direction while the Servomotor is stopped (i.e., decreases the speed to approximately 30 r/min or lower) and the Drive Prohibition Input is active.
- By default, **drive prohibition disabled** (drive prohibition does not operate) is set. Set **Drive Prohibition - Enable** (3B10-01 hex) to *1* (drive prohibition enabled) for a system that requires the drive prohibition input.

Additional Information

While the Positive Drive Prohibition Input (POT) is active, the Servomotor cannot be driven in the positive direction, but it can be driven in the negative direction. Conversely, while Negative Drive Prohibition Input (NOT) is active, the Servomotor cannot be driven in the negative direction, but it can be driven in the positive direction.

7-4 Software Position Limit Functions

This function notifies you that the present position exceeded the specified movement range and stops the Servomotor rotation.

7-4-1 Operating Conditions

The Software Position Limit Function is performed when home is defined.

7-4-2 Objects Requiring Settings

Index (hex)	Subindex (hex)	Name	Description	Reference
3B11	---	Software Position Limit	Sets the software position limit function.	P. 9-62
	01	Enable Selection	Selects whether to enable or disable the software position limit function. 0: Positive: Disabled, Negative: Disabled 1: Positive: Disabled, Negative: Enabled 2: Positive: Enabled, Negative: Disabled 3: Positive: Enabled, Negative: Enabled	P. 9-62
	02	Stop Selection	Selects the operation when the software position limit is enabled.	P. 9-63
	03	Min Position Limit	Sets the negative limit value.	P. 9-63
	04	Max Position Limit	Sets the positive limit value.	P. 9-63
3B21	---	Deceleration Stop	Sets the operation during deceleration stop.	P. 9-66
	01	Torque	Sets the torque limit value during deceleration stop. Setting range: *0.0% to 500.0%*	P. 9-66
3000	---	Basic Functions	Sets the basic functions of Servo Drives.	P. 9-7
	81	Function Status	Gives the status of the Servo Drive. bit 5: Positive Software Limit (PSOT) bit 6: Negative Software Limit (NSOT) 0: Within limit value 1: Outside limit value	P. 9-9

7-4-3 Description of Operation

When the software position limit function is enabled in **Software Position Limit - Enable Selection** (3B11-01 hex), if the present position exceeds the specified movement range, the Servo Drive stops the Servomotor according to the method specified in **Stop Selection** (3B11-02 hex).

The value set in **Enable Selection** (3B11-01 hex) determines the movement range as follows.

Stop Selection set value	During deceleration*1		After stopping	
	Deceleration method	Following error	State after stopping	Following error
2	The deceleration stop torque is used.*2	Clear	Lock at the stop position	Cleared at the stop and held after stopping
4*3	Stop according to the setting of Fault reaction option code	---	Stop according to the setting of Fault reaction option code	---

*1. During deceleration means the period in which the running motor decelerates and its speed reaches 30 r/min or lower. Once the motor speed reaches 30 r/min or lower and the operation changes to after stopping, the following operation conforms to the description for the state after stopping, regardless of the motor speed.

*2. When the deceleration stop torque is used to stop the Servomotor, the operation direction may be reversed if the inertia is small and the operation speed is slow.

*3. If you set **Stop Selection** to *4*, a Software Limit Exceeded (Error No. 34.1) occurs when the movement range is exceeded.

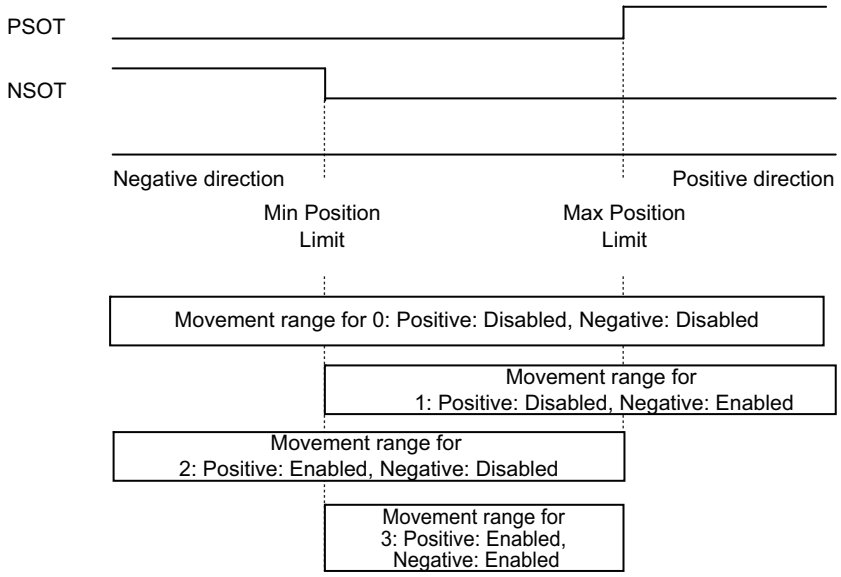

Note that the Servomotor does not stop if **Max Position Limit** (3B11-04 hex) is equal to or smaller than **Min Position Limit** (3B11-03 hex).

If the Servomotor stops outside the allowable operating range, commands only for the direction of the movement range are accepted.

Positive Software Limit (PSOT) and *Negative Software Limit (NSOT)* of **Function Status** (3000-81 hex) give the status regardless of the setting in **Enable Selection** (3B11-01 hex).

Precautions for Correct Use

- Because the deceleration stop causes the Servomotor to decelerate quickly, in the position control mode, the following error may become large momentarily. This may result in an Excessive Position Deviation Error (Error No. 24.00). If this error occurs, set the **Position Detection Function** - **Following Error Window** (3B50-05 hex) to an appropriate value.
- A load on the vertical axis and so forth may fall due to its own weight when the software limit value is exceeded. To prevent the load from falling, set **Stop Selection** (3B11-02 hex) to *2* so that the Servomotor decelerates with the deceleration stop torque and stops with the servo lock, or use the host controller to limit the operation instead of this function.
- A Command Warning (Error No. B1.00) will occur if a command is given in the direction outside the setting range while the Servomotor is stopped (i.e., decreases the speed to approximately 30 r/min or lower).

7-5 Backlash Compensation

This function compensates the specified backlash compensation amount, travel distance, and present position.

Use this function when there is a meshing error in machine systems.

The Backlash Compensation function can be used when the communications period is 250 μs or more. When the communications period is 125 μs, set **Backlash Compensation Selection** to 0 (disabled).

7-5-1 Operating Conditions

The backlash compensation function operates in the position control.

7-5-2 Objects Requiring Settings

Index (hex)	Subindex (hex)	Name	Description	Reference
3001	---	Machine	---	P. 9-13
	02	Backlash Compensation Selection	Selects whether to enable or disable backlash compensation in the position control, and the operation direction for the compensation. 0: Disabled 1: Compensate at the first positive operation after Servo ON 2: Compensate at the first negative operation after Servo ON	P. 9-13
	03	Backlash Compensation Amount	Sets the backlash compensation amount in the position control.	P. 9-13
	04	Backlash Compensation Time Constant	Sets the backlash compensation time constant in the position control.	P. 9-14

7-5-3 Description of Operation

When the first operation after Servo ON is performed in the direction specified in **Backlash Compensation Selection** (3001-02 hex), position data is compensated by Backlash Compensation Amount. After that, compensation is executed each time the operation direction is reversed.

The compensation is performed for the target position and the present position. The software position limit function and the latch function are performed based on the position data after compensation.

Backlash Compensation is performed as follows:

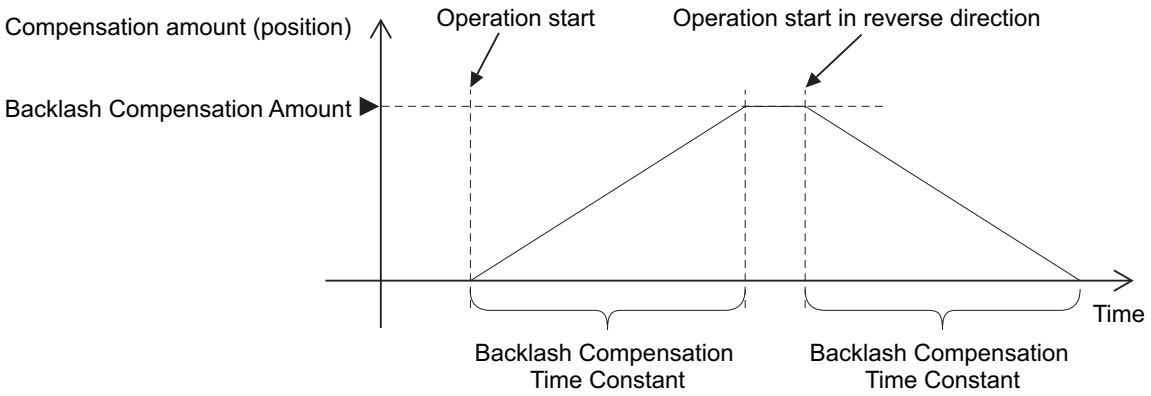

To determine the actual position of the Servomotor, the Servomotor position data acquired via EtherCAT communications is offset by the Backlash Compensation Amount.

If the Servo is turned OFF when backlash compensation is performed, the position data is reset to the value that does not contain Backlash Compensation Amount. The backlash compensation is performed as described above when the Servo is turned ON again.

Additional Information

Conditions for Clearing Backlash Compensation

- When the following error is reset:

  This includes when the Servo is OFF, and when following error is cleared due to the drive prohibition input.
- When the position data is initialized, except for the homing operation in Homing mode (hm):

  This includes **Absolute Encoder Setup** (4510-F1 hex).

7-6 Brake Interlock

This function lets you set the output timing for the Brake Interlock Output (BKIR) signal that activates the holding brake when the Servo is turned OFF or an error occurs.

It is also possible to use the controller to force the brake control via EtherCAT communications.

You can select a port for the Brake Interlock Output from the brake output (BKIR), General Output (OUT 1 to 3), and Safe Brake Control (SBC) Output. For the details on the connection method for when a General Output (OUT 1 to 3) is selected, refer to the wiring diagram in *External Brake Interlock Output (EXTBKIR)* on page 3-18. For details on the connection method and the operation when you select Safe Brake Control (SBC) Output, refer to *8-9 Safe Brake Control (SBC) Function* on page 8-112.

Set an appropriate value to parameters described in *7-6-1 Objects Requiring Settings* on page 7-22.

7-6-1 Objects Requiring Settings

Index (hex)	Subindex (hex)	Name	Description	Reference
4610	---	Brake Interlock Output	Sets the brake interlock operation.	P. 9-113
	01	Enable	Selects whether to enable or disable the brake interlock output. 0: Disabled*1 1: Enabled	P. 9-113
	02	Timeout at Servo OFF	Sets the time from when the OFF state of the operation command is detected (the power supply to the motor is OFF) until the Brake Interlock Output (BKIR) is turned OFF (brake is held), when the Servo OFF is performed during motor operation.	P. 9-113
	03	Threshold Speed at Servo OFF	Sets the motor speed at which the Brake Interlock Output (BKIR) can be turned OFF (brake is held) after the Servo OFF command is detected, when the Servo OFF is performed during motor operation.	P. 9-113
	04	Hardware Delay Time	Sets the delay time of the mechanical brake operation, etc. Outputs the timing signal of the external brake by the use of this delay time, when the Servo OFF is performed during motor stop.	P. 9-114
4663	---	External Brake Interlock Output	Sets the output signal allocation and logic.	P. 9-130
	01	Port Selection	Selects the port to be allocated. If this function is not allocated, it is output to the brake output (BKIR). bit 0: General Output 1 (OUT1) bit 1: General Output 2 (OUT2) bit 2: General Output 3 (OUT3) bit 31: Safe Brake Control (SBC) Output 0: Not allocated 1: Allocated	P. 9-130
	02	Logic Selection	0: Positive logic (NO contact)	P. 9-130

Index (hex)	Subindex (hex)	Name	Description	Reference
60FE	---	Digital outputs	---	P. A-59
	01	Physical outputs	Changes the function output status. bit 0: NC Contact Brake Interlock Output (BKIR_b) 0: Brake released 1: Brake held bit 28: NO Contact Brake Interlock Output (BKIR_a) 0: Brake held 1: Brake released	P. A-59
4602	---	Function Output	Sets the function output.	P. 9-110
	01	Bit Mask	Selects whether to enable or disable the function output. bit 0: NC Contact Brake Interlock Output (BKIR_b) 0: Output disabled*2 1: Output enabled bit 28: NO Contact Brake Interlock Output (BKIR_a) 0: Output disabled*2 1: Output enabled	P. 9-110

*1. If this object is set to *0* (disabled), the Brake Interlock Output (BKIR) turns ON (brake released).

*2. Even when Bit Mask is *0* (output disabled), the Servo Drive can perform the brake control.

Precautions for Correct Use

- The brake built into a Servomotor with a brake is a non-excitation brake designed only to hold the motor in the stop state when the operation is stopped. Accordingly, set an appropriate time so that the brake is applied after the Servomotor stops.
- If the brake is applied while the Servomotor is rotating, the brake disc will wear abnormally or sustain damage. This results in a bearing or encoder failure in the Servomotor.
- The workpiece may fall when the brake is released for a vertical axis. Carefully consider the timing of releasing the brake.
- For STO or an error applicable to Operation B of a method to stop, in some cases, a Servomotor power supply becomes OFF before a brake is held. As a result, a workpiece may fall. Take a caution of the timing when the brake is held. For a method to stop, refer to **Shutdown option code** (605B hex), **Disable operation option code** (605C hex) and **Fault reaction option code** (605E hex).

7-6-2 Description of Operation

To control the brake forcibly via EtherCAT communications, set **Digital outputs - Physical outputs** (60FE-01 hex) and **Function Output - Bit Mask** (4602-01 hex). However, to prevent a workpiece from falling for a vertical axis, the brake is constantly applied except when the status of ESM is Operational.

● Relationship between Brake Interlock Function and Status of ESM

Status of ESM	Physical output (60FE-01 hex)		Bit Mask (4602-01 hex)		Brake state	Digital inputs bit 26
	bit 0	bit 28	bit 0	bit 28		
Operational	0	---	0	0	Held	0
			1		Released	1
	1		0		Held	0
			1		Held	0
	---	0	0	0	Held	0
				1	Held	0
		1		0	Held	0
				1	Released	1
	0	0	1	1	Held	0
	0	1			Released	1
	1	0			Held	0
	1	1			Held	0
Other than Operational	---	---	---	---	Held	0

Set **External Brake Interlock Output - Port Selection** (4663-01 hex) to change the output port of the brake interlock signal.

The following table lists output ports corresponding to values of Port Selection.

Value of Port Selection	Output port
0	Brake output (BKIR)
1	General Output 1 (OUT1)
2	General Output 2 (OUT2)
4	General Output 3 (OUT3)
2147483648	Safe Brake Control (SBC) Output

You can monitor the output status of the brake interlock signal by **I/O Monitor - Physical I/O** (4600-81 hex), **Digital inputs** (60FD-00 hex) bit 26, and **External Brake Interlock Output - Signal Status** (4663-81 hex).

The output status is given to data that are indicated with a check mark in the following table.

Output port	Physical I/O					Digital inputs bit 26	Signal Status (4663-81 hex)
	bit 17	bit 18	bit 19	bit 30	bit 22		
General Output 1 (OUT1)	√	---	---	---	---	√	√
General Output 2 (OUT2)	---	√	---	---	---	√	√
General Output 3 (OUT3)	---	---	√	---	---	√	√
Brake output (BKIR)	---	---	---	√	---	√	---
Safe Brake Control (SBC) Output	---	---	---	---	√	√	√

7-6-3 Operation Timing

This section shows the timing of the Brake Interlock Output (BKIR).

Basic Timing

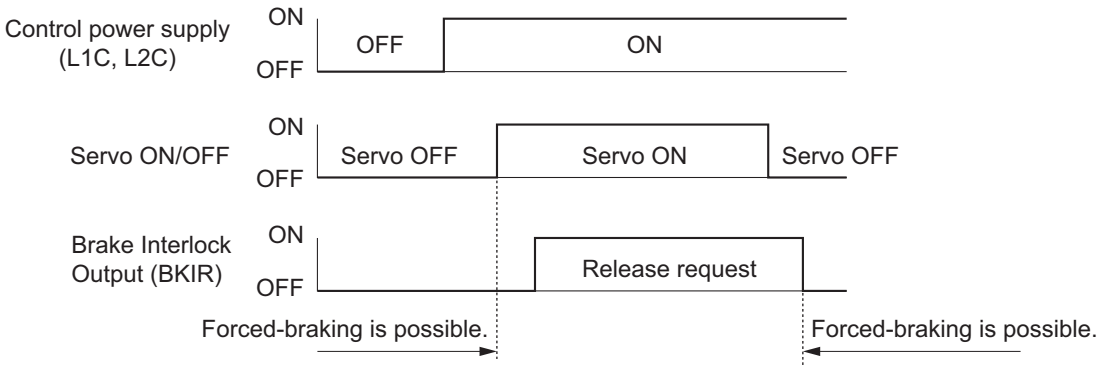

Servo ON/OFF Operation Timing When Motor Is Stopped

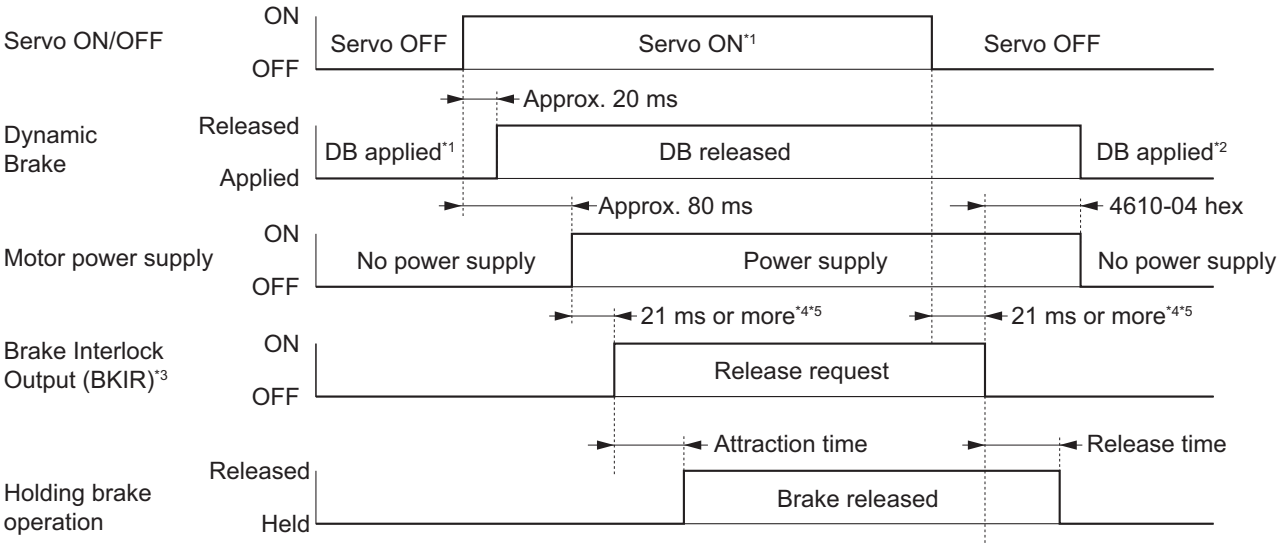

*1. The Servo does not turn ON until the motor rotation speed drops to approximately 30 r/min or lower.

*2. The operation of the dynamic brake when the Servo is OFF depends on the set value in **Stop Selection** – **Disable Operation Option Code** (3B20-02 hex).

*3. The Brake Interlock Output (BKIR) signal is output when a release request command is received from either servo control or EtherCAT communications. The above example shows when there is no brake release request from EtherCAT communications.

*4. Depends on the set value in **Brake Interlock Output** – **Hardware Delay Time** (4610-04 hex). The brake attraction time and release time vary depending on the Servomotor brake. For details, refer to *3-2 Servomotor Specifications* on page 3-31.

*5. 2 ms or more when the External Brake Interlock Output is used.

Servo ON/OFF Operation Timing When Motor Is Operating

Based on these operation timings, regenerative energy is produced if the motor rotation stops abnormally. Accordingly, repeated operation cannot be performed. Provide a wait time of at least 10 minutes for the motor to cool down.

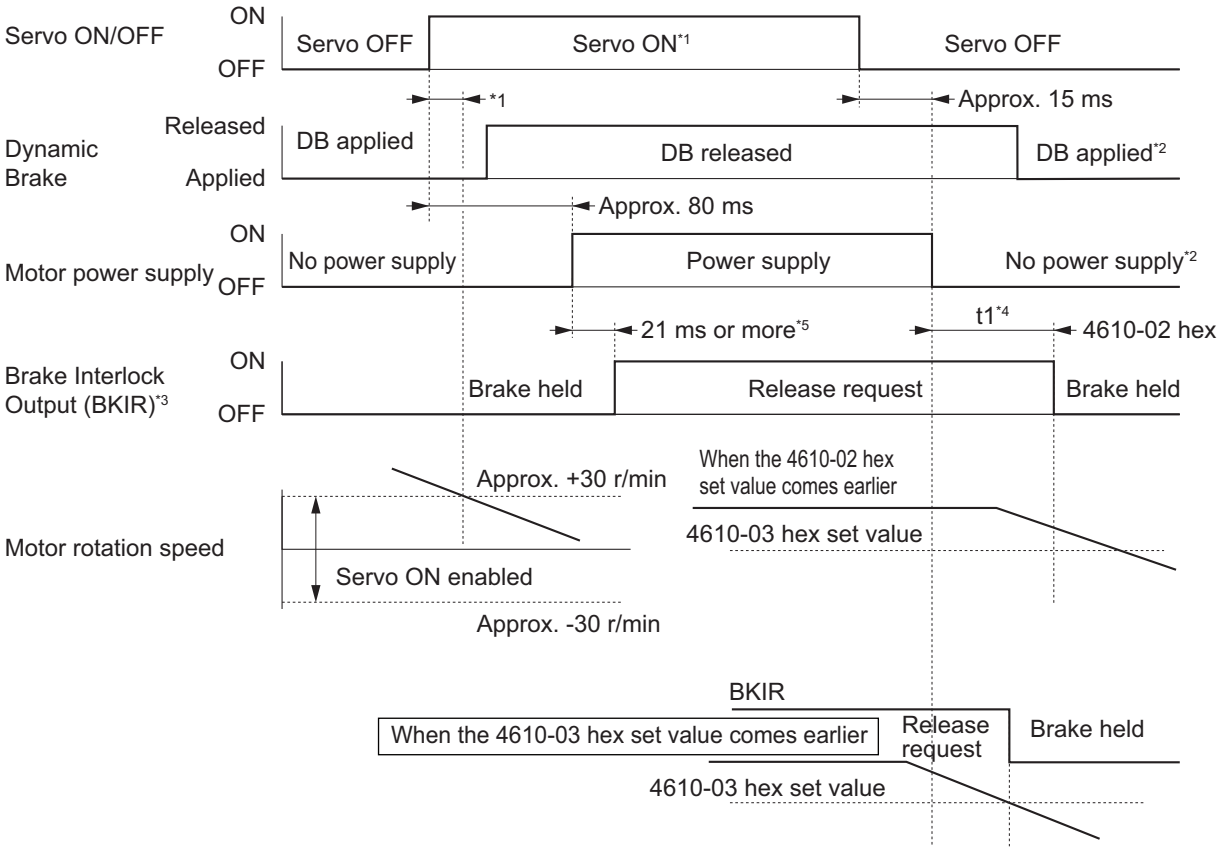

*1. The Servo does not turn ON until the motor rotation speed drops to 30 r/min or lower. If the Servo ON command is input during motor rotation, the Command Warning (Error No. B1.00) will occur. The Servo ON command is ignored.

*2. The operation of the dynamic brake when the Servo is OFF depends on the set value in **Stop Selection** – **Disable Operation Option Code** (3B20-02 hex).

*3. The Brake Interlock Output (BKIR) signal is output when a release request command is received from either servo control or EtherCAT communications. The above example shows when there is no brake release request from EtherCAT communications.

*4. “t1” is the period until the value becomes smaller than the set value in the **Timeout at Servo OFF** (4610-02 hex) or the **Threshold Speed at Servo OFF** (4610-03 hex), whichever comes earlier.

*5. Depends on the set value in **Brake Interlock Output** – **Hardware Delay Time** (4610-04 hex).

Note 1. Even when the Servo ON input is turned ON again while the motor is decelerating, the system does not enter the Servo ON state until the motor stops.

2. If the Brake Interlock Output (BKIR) is output because of **Timeout at Servo OFF** (4610-02 hex), a Brake Interlock Error (Error No. 97.00) will occur.

Operation Timing When an Error Occurs (Servo ON)

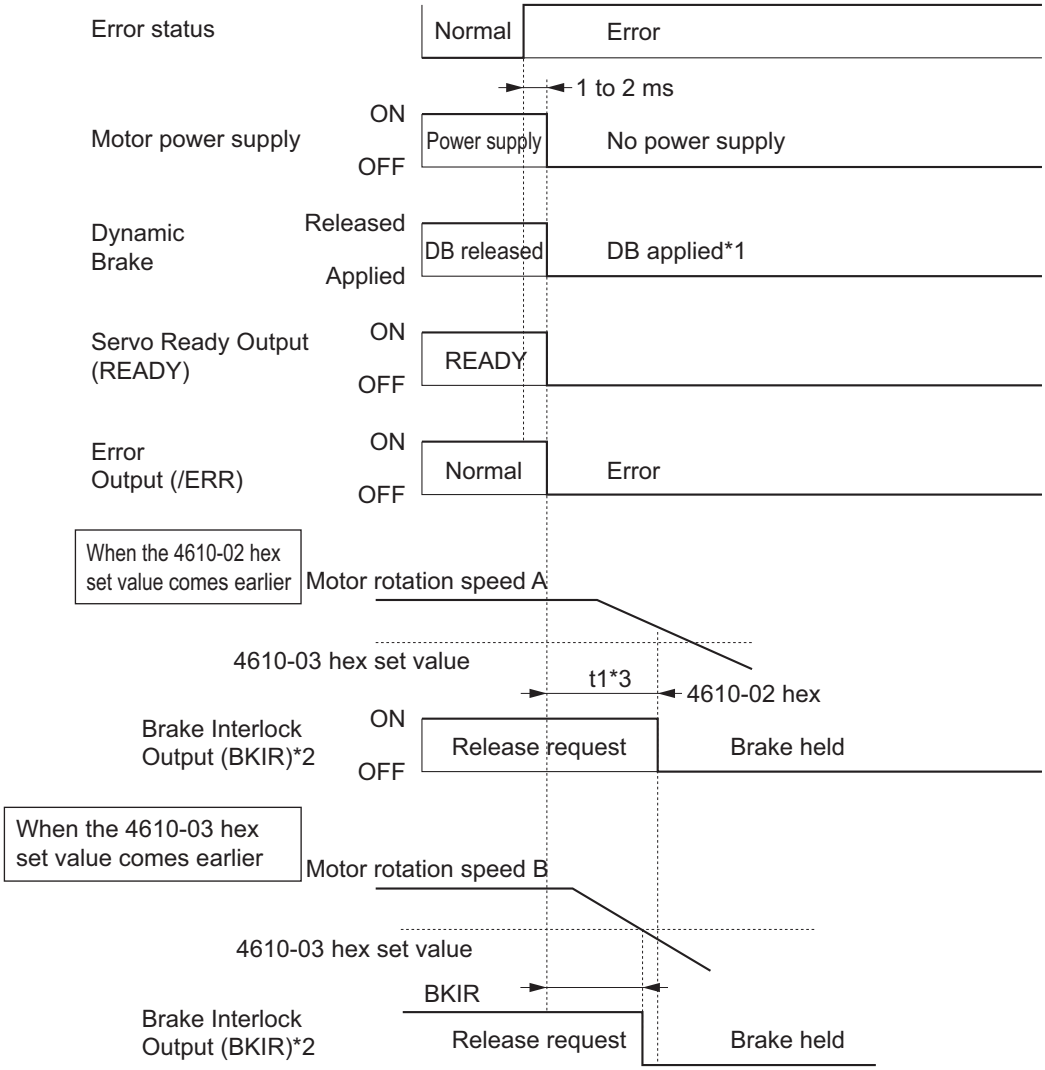

*1. The operation of the dynamic brake when there is an error depends on the set value in the **Stop Selection – Fault Reaction Option Code** (3B20-04 hex).

*2. The Brake Interlock Output (BKIR) signal is output when a release request command is received from either servo control or EtherCAT communications. The above example shows when there is no brake release request from EtherCAT communications.

*3. "t1" is the period until the value becomes smaller than the set value in the **Timeout at Servo OFF** (4610-02 hex) or the **Threshold Speed at Servo OFF** (4610-03 hex), whichever comes earlier.

Note 1. Even when the Servo ON input is turned ON again while the motor is decelerating, the system does not enter the Servo ON state until the motor stops.

2. If the main circuit power supply turns OFF while the motor is operating, a phase loss error or main circuit undervoltage will occur, in which case this operation timing is applied.

3. If the Brake Interlock Output (BKIR) is output because of **Timeout at Servo OFF** (4610-02 hex), a Brake Interlock Error (Error No. 97.00) will occur.

Operation Timing When an Error Is Reset

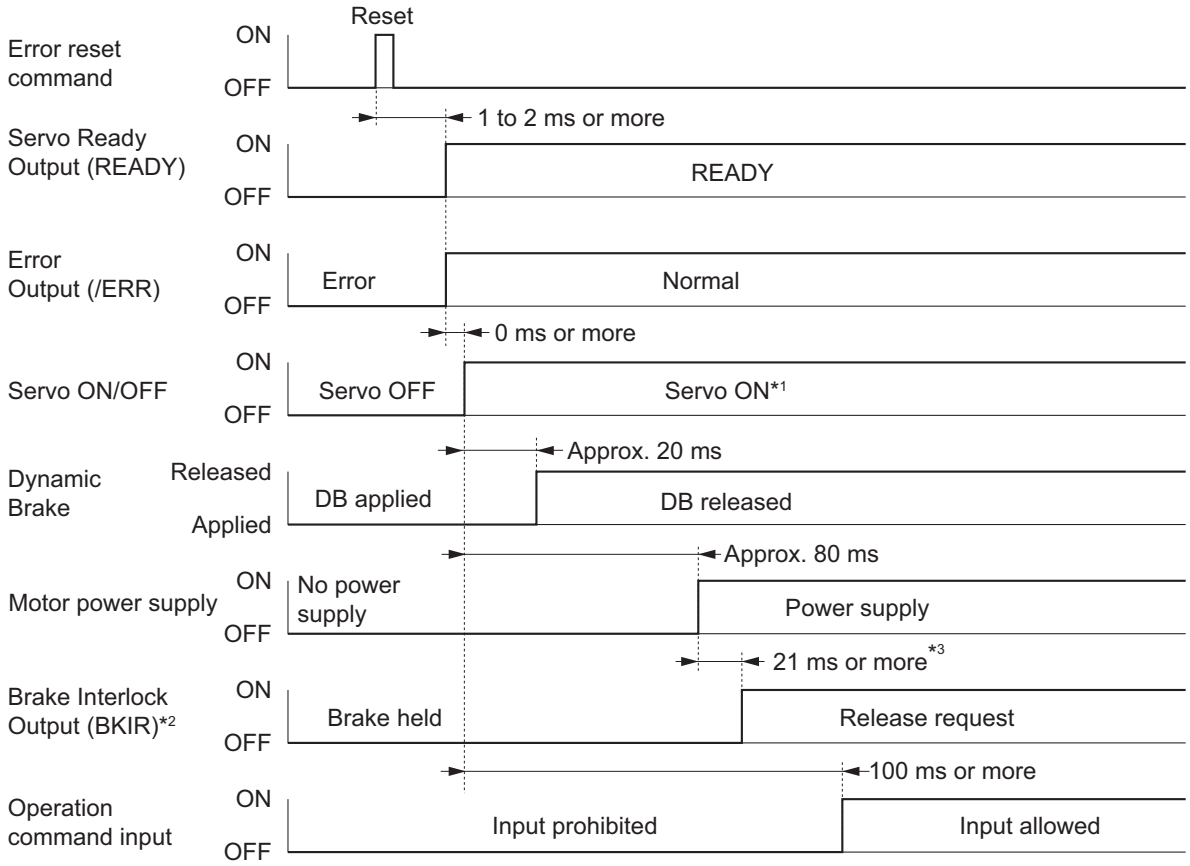

*1. The Servo does not turn ON until the motor rotation speed drops to approximately 30 r/min or lower.

*2. The Brake Interlock Output (BKIR) signal is output when a release request command is received from either servo control or EtherCAT communications. The above example shows when there is no brake release request from EtherCAT communications.

*3. Depends on the set value in **Brake Interlock Output** – **Hardware Delay Time** (4610-04 hex).

Note After an error is reset, the system enters the Servo OFF state (motor not energized). To turn ON the Servo, after resetting the error, send the Servo ON command again according to the above timing.

7-7 Electronic Gear Function

The Electronic Gear Function controls the position by using the value that is obtained by multiplication of the position command input from the host controller by the specified gear ratio.

The Electronic Gear Function can be used when the communications period is 250 μs or more. When the communications period is 125 μs, set the gear ratio to 1:1.

When the Servo Drive is connected to an OMRON Machine Automation Controller NJ/NX-series CPU Unit or NY-series IPC Machine Controller, the electronic gear ratio is set on the controller. Set the electronic gear ratio to 1:1 on the Servo Drive.

7-7-1 Objects Requiring Settings

Index (hex)	Subindex (hex)	Name	Description	Reference
3001	---	Machine	Sets the mechanical system which is connected to the motor.	P. 9-13
	05	Motor Revolutions*1	Set the numerator of the electronic gear ratio.	P. 9-14
	06	Shaft Revolutions*1	Set the denominator of the electronic gear ratio.	P. 9-14

*1. The electronic gear ratio must be between 1/2,000 and 2,000. If it is set outside the range, an Electronic Gear Setting Error (Error No. 93.00) will occur.

Precautions for Correct Use

To make the position command smoother after the electronic gear setting, adjust it by using the **Position Command Filter** (3011 hex).

7-7-2 Operation Example

This example uses a motor with a 20-bit encoder (1,048,576 pulses per rotation).

- If you set 3001-05 hex/3001-06 hex to 1,048,576/8,388,608, the operation is the same as the 23-bit Servomotor (8,388,608 pulses per rotation).

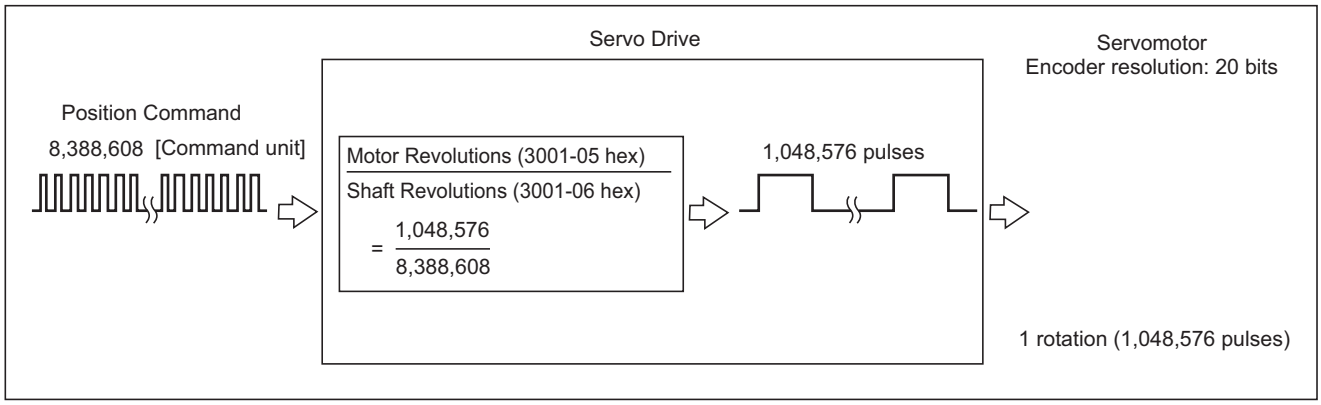

7-8 Torque Limit Switching

This function switches the torque limit according to the operation direction, and depending on the Positive Torque Limit (PCL), the Negative Torque Limit (NCL), and the Positive/Negative Torque Limit Input Commands from EtherCAT communications.

This function is used in the following conditions.

- When push-motion operation, such as pressing, is performed.
- When the torque at startup and during deceleration is suppressed to protect mechanical systems, etc.

The **Torque Limit - Switching Selection** (3330-01 hex) is used to select a method to switch the torque limit.

7-8-1 Operating Conditions

The torque limit switching function is enabled under the following conditions.

- Position control, velocity control, and torque control
- The Servo is ON.

7-8-2 Objects Requiring Settings

Index (hex)	Subindex (hex)	Name	Description	Reference
3330	---	Torque Limit	Sets the torque limit function.	P. 9-55
	01	Switching Selection	Selects the torque limit switching method.	P. 9-55
	02	Max Torque	Sets the maximum torque limit value.	P. 9-55
	03	Positive Torque Limit Value	Sets the positive torque limit value.	P. 9-56
	04	Negative Torque Limit Value	Sets the negative torque limit value.	P. 9-56
	05	Positive Torque Limit Value 2	Sets the positive torque limit value 2.	P. 9-56
	06	Negative Torque Limit Value 2	Sets the negative torque limit value 2.	P. 9-56
60E0	---	Positive torque limit value	Sets the positive torque limit value.	P. A-56
60E1	---	Negative torque limit value	Sets the negative torque limit value.	P. A-56

7-8-3 Torque Limit Switching Method

The following table shows the operations that are performed according to the setting of the **Torque Limit - Switching Selection** (3330-01 hex).

Torque limit switching selection	Positive torque limit		Negative torque limit	
	iPCL*1OFF	iPCL*1ON	iNCL*2OFF	iNCL*2ON
0	Positive torque limit value (60E0 hex or 3330-03 hex)		Negative torque limit value (60E1 hex or 3330-04 hex)	
1	Positive Torque Limit Value 2 (3330-05 hex)	Positive torque limit value (60E0 hex or 3330-03 hex)	Negative Torque Limit Value 2 (3330-06 hex)	Negative torque limit value (60E1 hex or 3330-04 hex)
2	Positive torque limit value (60E0 hex or 3330-03 hex)	Positive Torque Limit Value 2 (3330-05 hex)	Negative torque limit value (60E1 hex or 3330-04 hex)	Negative Torque Limit Value 2 (3330-06 hex)

*1. iPCL = Logical OR of the general-purpose input signal (PCL) and P_CL (Controlword)
*2. iNCL = Logical OR of the general-purpose input signal (NCL) and N_CL (Controlword)

For the **Positive torque limit value** (60E0 hex or 3330-03 hex) and **Negative torque limit value** (60E1 hex or 3330-04 hex), the values of 60E0 hex and 60E1 hex are used if 60E0 hex and 60E1 hex are mapped to a PDO. If they are not mapped to a PDO, the values of 3330-03 hex and 3330-04hex are used.

The positive torque limit and negative torque limit are limited by the maximum torque regardless of the settings.

7-9 Soft Start

This function performs auto acceleration and deceleration inside the Servo Drive when step-type velocity commands are input.

To reduce any impacts made by acceleration changes, you can also use the velocity command first-order lag filter.

7-9-1 Objects Requiring Settings

Index (hex)	Subindex (hex)	Name	Description	Reference
3021	---	Velocity Command Filter	---	P. 9-24
	01	Acceleration Time	Sets the acceleration time during acceleration.	P. 9-24
	02	Deceleration Time	Sets the deceleration time during deceleration.	P. 9-24
	03	IIR Filter Enable	Selects whether to enable or disable the IIR filter in the velocity command filter. 0: Disabled 1: Enabled	P. 9-24
	04	Filter Cutoff Frequency	Sets the cutoff frequency for the IIR filter.	P. 9-24

7-9-2 Soft Start Acceleration/Deceleration Time

For a step velocity command input, set the time required for the velocity command to reach 1,000 r/min in Acceleration Time.

Similarly, set the time required for the velocity command to decrease the velocity from 1,000 r/min to 0 r/min in Deceleration Time.

Acceleration Time [ms] = Vc/1,000 r/min × Acceleration Time × 0.1 ms

Deceleration Time [ms] = Vc/1,000 r/min × Deceleration Time × 0.1 ms

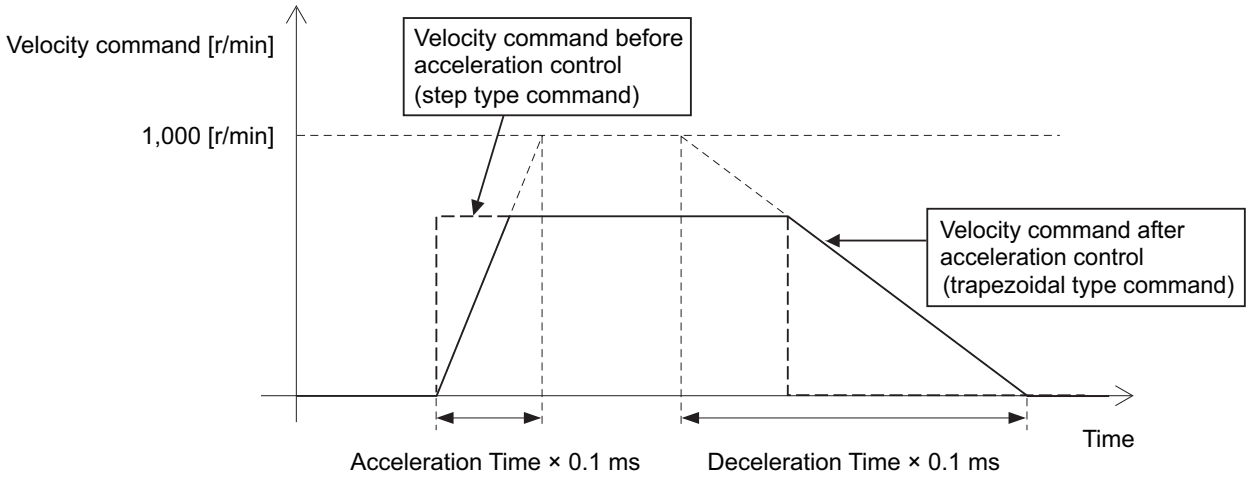

Precautions for Correct Use

Do not set the Acceleration Time and the Deceleration Time when the position loop structure with a host controller is used.

7-9-3 Velocity Command First-order Lag Filter

The command first-order lag filter is an IIR filter for velocity commands.

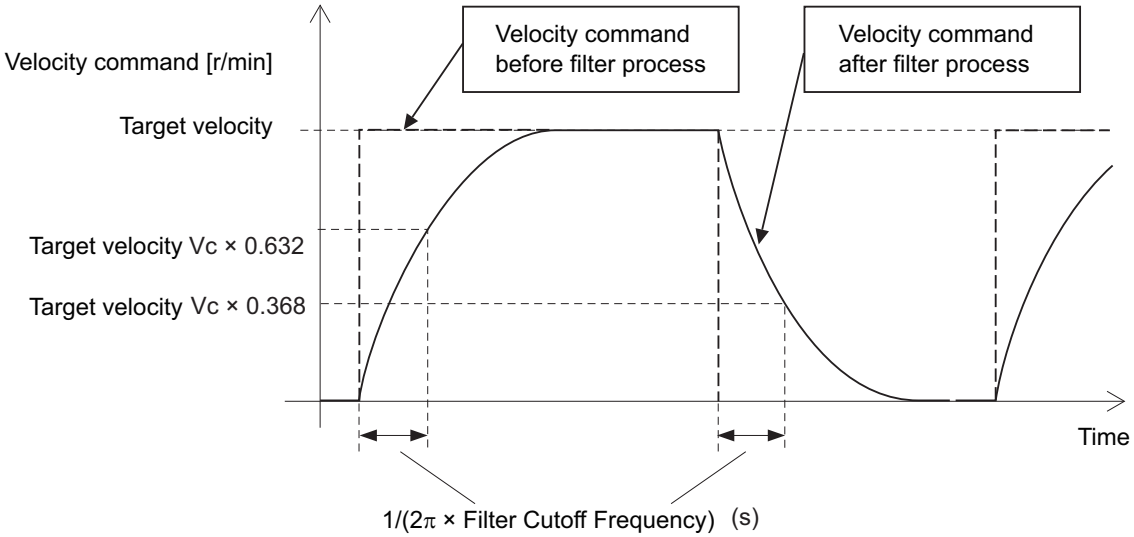

7-10 Gain Switching Function

This function switches the position control gain, velocity control gain, and torque command filter.

If the load inertia changes or you want to change the responsiveness depending on whether the motor is stopping or operating, you can perform optimal control by using gain switching.

7-10-1 Objects Requiring Settings

Index (hex)	Subindex (hex)	Name	Description	Reference
3212	---	Gain Switching in Position Control	Sets the gain switching method in the position control.	P. 9-35
	01	Mode Selection	Selects the condition to switch between Gain 1 and Gain 2. 0: Always Gain 1 1: Always Gain 2 2: Gain switching command input via EtherCAT communications 3: Actual motor velocity with position command	P. 9-36
	02	Delay Time	Sets the delay time when the gain returns from Gain 2 to Gain 1 when the Mode Selection is set to *3*.	P. 9-36
	03	Speed	Sets the speed threshold when Gain 2 switches to Gain 1. This object is enabled when the Mode Selection is set to *3*.	P. 9-36
	04	Time	Sets the time to switch the gain completely when the gain is switched from low to high in stages.	P. 9-36
3213	---	1st Position Control Gain	Sets the 1st position control gain.	P. 9-36
	01	Proportional Gain	Sets the proportional gain.	P. 9-36
3214	---	2nd Position Control Gain	Sets the 2nd position control gain.	P. 9-37
	01	Proportional Gain	Sets the proportional gain.	P. 9-37
3222	---	Gain Switching in Velocity Control	Sets the gain switching method in the velocity control.	P. 9-39
	01	Mode Selection	Selects the condition to switch between Gain 1 and Gain 2. 0: Always Gain 1 1: Always Gain 2 2: Gain switching command input via EtherCAT communications	P. 9-39
3223	---	1st Velocity Control Gain	Sets the 1st velocity control gain.	P. 9-39
	01	Proportional Gain	Sets the proportional gain.	P. 9-39
	02	Integral Gain	Sets the velocity integral gain.	P. 9-39
3224	---	2nd Velocity Control Gain	Sets the 2nd velocity control gain.	P. 9-40
	01	Proportional Gain	Sets the proportional gain.	P. 9-40
	02	Integral Gain	Sets the velocity integral gain.	P. 9-40

Index (hex)	Subindex (hex)	Name	Description	Reference
3232	---	Filter Switching in Torque Control	Sets the filter switching method in the torque control.	P. 9-41
	01	Mode Selection	Selects the condition to switch between 1st Filter and 2nd Filter. 0: Always 1st Filter 1: Always 2nd Filter 2: Gain switching command input via EtherCAT communications	P. 9-42
3233	---	1st Torque Command Filter	Sets the 1st torque command filter.	P. 9-42
	01	Enable	Selects whether to enable or disable the 1st torque command filter. 0: Disabled 1: Enabled	P. 9-42
	02	Cutoff Frequency	Sets the cutoff frequency for the filter.	P. 9-42
3234	---	2nd Torque Command Filter	Sets the 2nd torque command filter.	P. 9-43
	01	Enable	Selects whether to enable or disable the 2nd torque command filter. 0: Disabled 1: Enabled	P. 9-43
	02	Cutoff Frequency	Sets the cutoff frequency for the filter.	P. 9-43
4602	---	Function Output	Sets the function output.	P. 9-110
	01	Bit Mask	Selects whether to enable or disable the function outputs. bit 24: Gain Switching (G-SEL) 0: Gain switching disabled 1: Gain switching enabled	P. 9-110
60FE	---	Digital outputs	–	P. A-59
	01	Physical outputs	Changes the function output status of each bit. bit 24: Gain Switching (G-SEL) 0: Gain 1 1: Gain 2	P. A-59

7-10-2 Mode Selection

The **Mode Selection** is used to set the condition to switch between Gain 1 and Gain 2.

When you select Gain 1, control is performed based on **1st Position Control Gain**, **1st Velocity Control Gain**, and **1st Torque Command Filter**. When you select Gain 2, control is performed based on **2nd Position Control Gain**, **2nd Velocity Control Gain**, and **2nd Torque Command Filter**.

The following is an operation example.

Mode Selection:

Gain Switching in Position Control - Mode Selection (3212-01 hex) = 0: Gain1

Gain Switching in Velocity Control - Switching Selection (3222-01 hex) = 1: Gain 2

Switching when Filter Switching in Torque Control - Mode Selection (3232-01 hex) = 2: Input command (G-SEL)

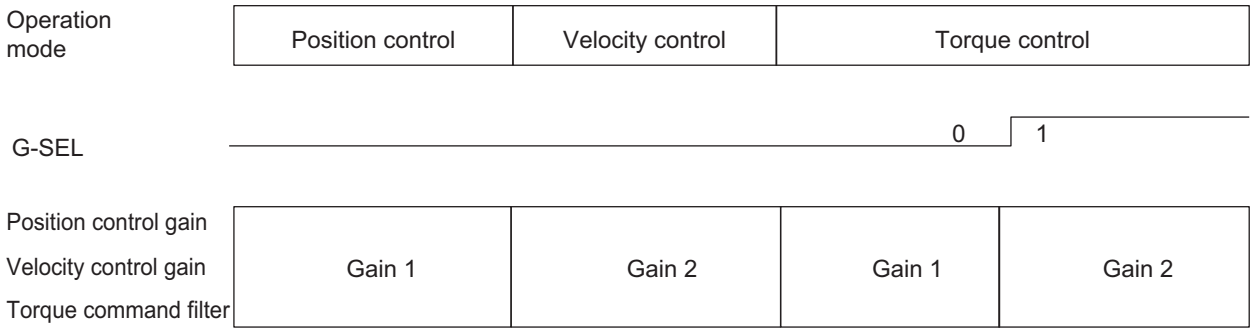

When Mode Selection = 0: Always Gain 1 or 1: Always Gain 2

If **Mode Selection** is set to *0*, **1st Position Control Gain** (3213 hex), **1st Velocity Control Gain** (3223 hex), and **1st Torque Command Filter** (3233 hex) are used.

If **Mode Selection** is set to *1*, **2st Position Control Gain** (3214 hex), **2st Velocity Control Gain** (3224 hex), and **2st Torque Command Filter** (3234 hex) are used.

When Mode Selection = 2: Gain switching command input via EtherCAT communications

If **Mode Selection** is set to *2*, you can switch between Gain 1 and Gain 2 by changing the value of *bit 24: G-SEL* of **Digital outputs - Physical outputs** (60FE-01 hex) via EtherCAT communications.

Set value	Description
0	Gain 1
1	Gain 2

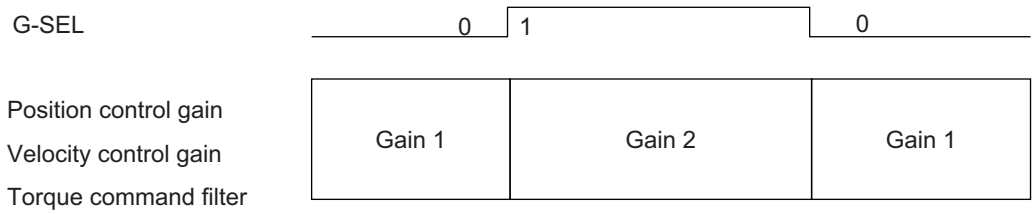

When Mode Selection = 3: Actual motor velocity with position command

If **Mode Selection** is set to *3*, you can switch between Gain 1 and Gain 2 by using the position command and the motor velocity.

Set the **Gain Switching in Position Control - Speed** (3212-03 hex) to a speed threshold to switch from Gain 2 to Gain 1. You can set the delay time for this switching operation in **Delay Time** (3212-02 hex).

Gain 1 switches to Gain 2 when the position command velocity becomes a value other than 0.

After the operation is performed, the position command velocity becomes 0, and Gain 2 switches to Gain 1 when the motor velocity reaches the set **Gain Switching in Position Control** – **Speed** (3212-03 hex) or lower and the **Gain Switching in Position Control – Delay Time** (3212-02 hex) elapses.

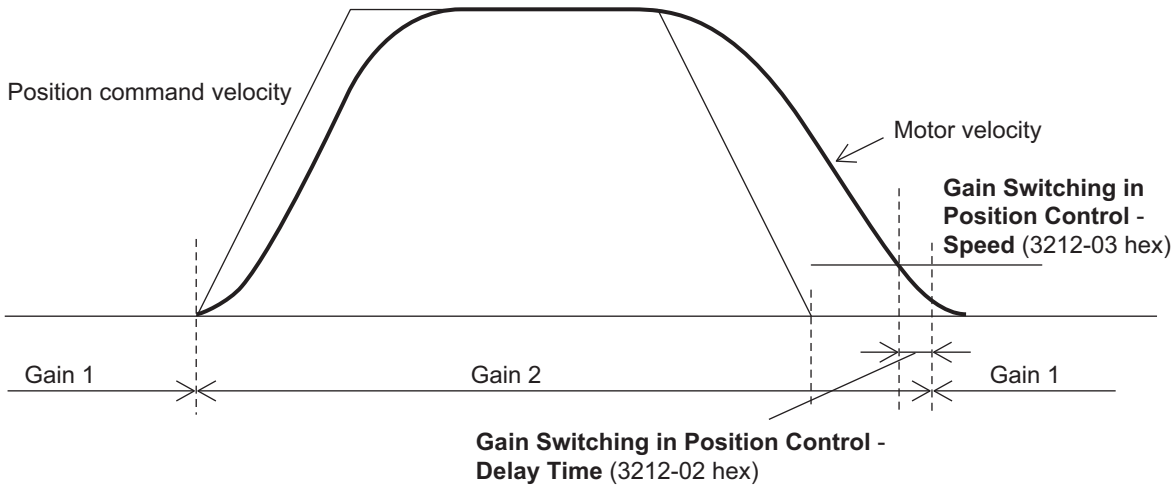

After Gain 2 switched to Gain 1, the Gain 1 is held even if overshooting occurs and the motor velocity exceeds the **Gain Switching in Position Control - Speed** (3212-03 hex).

7-10-3 Gain Switching in Position Control

In position control, vibration may occur if Gain 1 and Gain 2 are switched and the gain increases rapidly. To switch the gain gradually and suppress the vibration, set **Position Gain Switching - Time** (3212-04 hex).

When the gain changes from a lower set value to a higher set value, it increases in the specified time. When the gain changes to a lower value, the change occurs immediately.

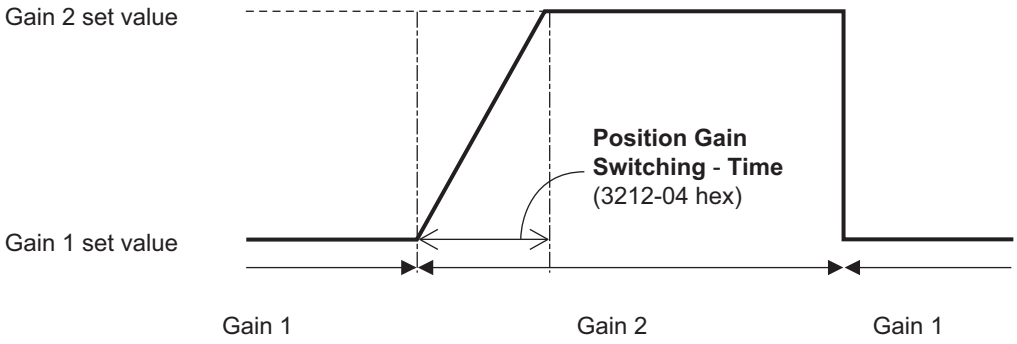

7-11 Touch Probe Function (Latch Function)

The touch probe function latches the actual position and time stamp at the rising edge of an external latch input signal or the encoder's phase-Z signal. 1S-series Servo Drives have two latch functions.

7-11-1 Related Objects

Index (hex)	Subindex (hex)	Name	Description	Reference
3B30	---	Touch Probe 1	---	P. 9-67
	01	Touch Probe 1 Source	1: External Latch Input 1 (EXT1) 2: External Latch Input 2 (EXT2) 6: Encoder Phase Z	P. 9-68
	83	Positive Edge Time Stamp	Gives the time which is latched by the Latch Function 1 (Touch Probe 1).	P. 9-68
3B31	---	Touch Probe 2	---	P. 9-70
	01	Touch Probe 2 Source	1: External Latch Input 1 (EXT1) 2: External Latch Input 2 (EXT2) 6: Encoder Phase Z	P. 9-70
	83	Positive Edge Time Stamp	Gives the time which is latched by the Latch Function 2 (Touch Probe 2).	P. 9-70
4632	---	External Latch Input 1	---	P. 9-117
	01	Port Selection	Selects the port to be allocated. 0: No allocation 1: General Input 1 (IN1) 2: General Input 2 (IN2) 3: General Input 3 (IN3) 4: General Input 4 (IN4) 5: General Input 5 (IN5) 6: General Input 6 (IN6) 7: General Input 7 (IN7) 8: General Input 8 (IN8)	
	02	Logic Selection	Select positive logic (NO contact) or negative logic (NC contact). 0: Positive logic (NO contact) 1: Negative logic (NC contact)	

Index (hex)	Subindex (hex)	Name	Description	Reference
4633	---	External Latch Input 2	---	P. 9-118
	01	Port Selection	Selects the port to be allocated. 0: No allocation 1: General Input 1 (IN1) 2: General Input 2 (IN2) 3: General Input 3 (IN3) 4: General Input 4 (IN4) 5: General Input 5 (IN5) 6: General Input 6 (IN6) 7: General Input 7 (IN7) 8: General Input 8 (IN8)	
	02	Logic Selection	Select positive logic (NO contact) or negative logic (NC contact). 0: Positive logic (NO contact) 1: Negative logic (NC contact)	
60B8	---	Touch probe function*1	Sets the latch (touch probe) function.	P. A-53
60B9	---	Touch probe status*2	Gives the status of the Latch Function (Touch Probe) 1 and 2.	P. A-54
60BA	---	Touch probe 1 positive edge	Gives the position which is latched by the Latch Function 1 (Touch Probe 1).	P. A-54
60BC	---	Touch probe 2 positive edge	Gives the position which is latched by the Latch Function 2 (Touch Probe 2).	P. A-54

*1. The bits of Touch probe function are specified as follows.

b15	b14	b13	b12	b11	b10	b9	b8	b7	b6	b5	b4	b3	b2	b1	b0
Rsv	Rsv	ENg	EPs	TriSel		Cont	Ena	Rsv	Rsv	ENg	EPs	TriSel		Cont	Ena
Latch Function 2								Latch Function 1							

Ena: Latch function disabled (0) or enabled (1)

Cont: Trigger First Event Mode (0)/Continuous Mode (1) in latch operation

TriSel: Latch trigger input switch

Bit 3 (11)	Bit 2 (10)	Selected trigger input
0	0	EXT1 (or 2)
0	1	Phase Z
1	0	Follow the setting in the Touch probe source (60D0 hex).
1	1	Reserved The trigger signal input is processed as *0*.

EPs: Latch enabled (1) or disabled (0) on the positive edge

ENg: Unsupported (Fixed to *0*)

Rsv: Reserved (Fixed to *0*)

*2. The bits of Touch probe status are specified as follows.

b15	b14	b13	b12	b11	b10	b9	b8	b7	b6	b5	b4	b3	b2	b1	b0
UD		Rsv	Rsv	Rsv	NLc	PLc	Enb	UD		Rsv	Rsv	Rsv	NLc	PLc	Enb
Latch Function 2								Latch Function 1							

Rsv: Reserved (Fixed to *0*)

Enb: Latch function disabled (0) or enabled (1)

PLc: Without (0) or with (1) Latch positive data

NLc: Latch negative data (Fixed to *0*)

UD: User-defined (Fixed to *0*)

7-11-2 Trigger Signal Settings

You can select the latch trigger as follows.

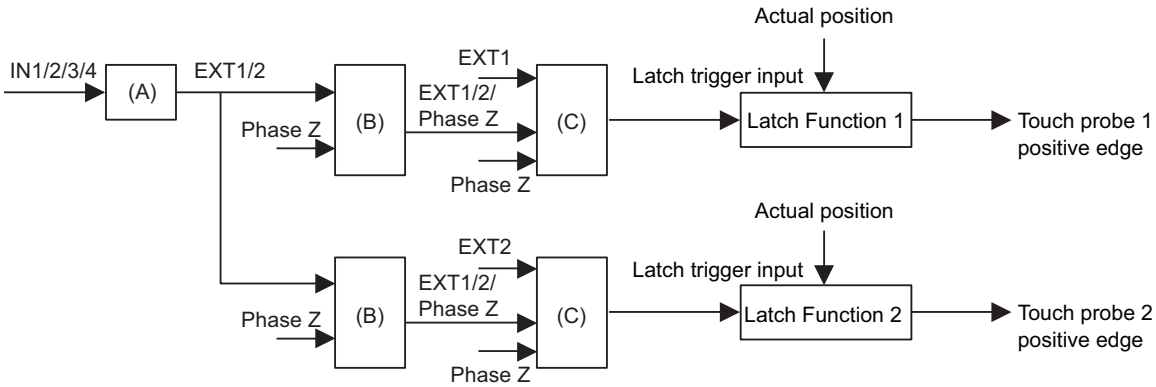

	Function	Description
(A)	General-purpose input function selection (including logic selection)	Allocation of general-purpose input signals and logic selection
(B)	Touch probe source	Selecting the latch trigger from EXT1, EXT2, and phase Z
(C)	Latch trigger input switching	Switching a trigger to be used from a signal selected in Touch probe source, EXT1, EXT2, and Phase Z

Precautions for Correct Use

When you use the general-purpose inputs as the external latch signals, use the general-purpose input signals 7 and 8. If you use the general-purpose input signals 1 to 6, a delay of approximately 2 ms will occur.

7-11-3 Operation Sequence

The operations when Cont (latch operation) is *0* (Trigger First Event Mode) and *1* (Continuous Mode) are explained below.

When the setting is changed when Ena (touch probe function) is *1* (enabled), the change is applied immediately. The value of the status is valid only when Ena (touch probe function) is *1* (enabled).

Trigger First Event (60B8 hex Bit 1/9 = 0: Trigger first event)

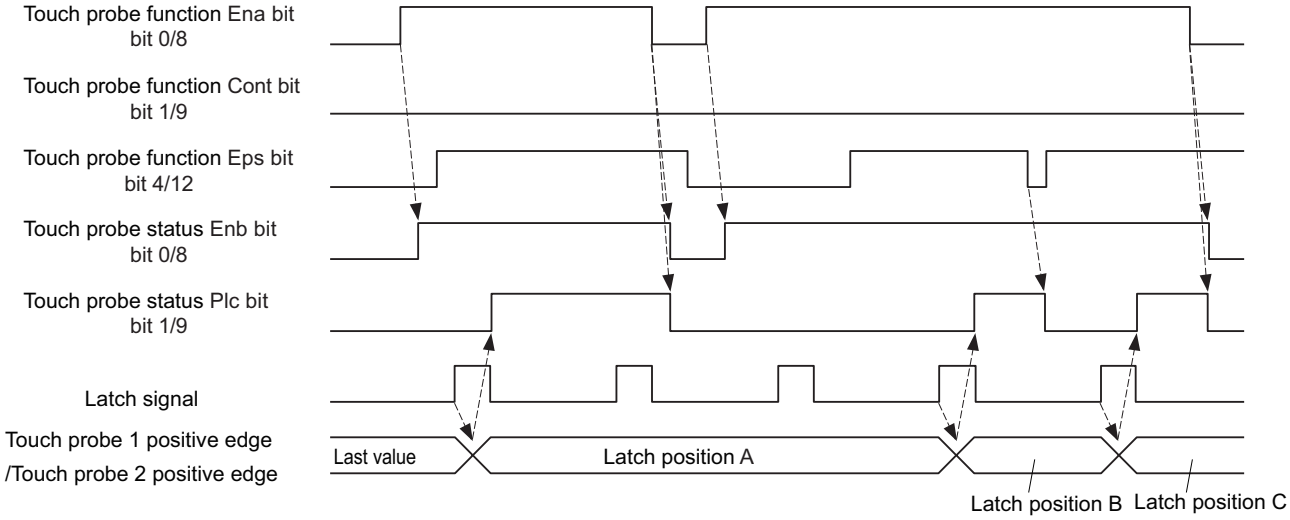

Continuous (60B8 hex Bit 1/9 = 1: Continuous)

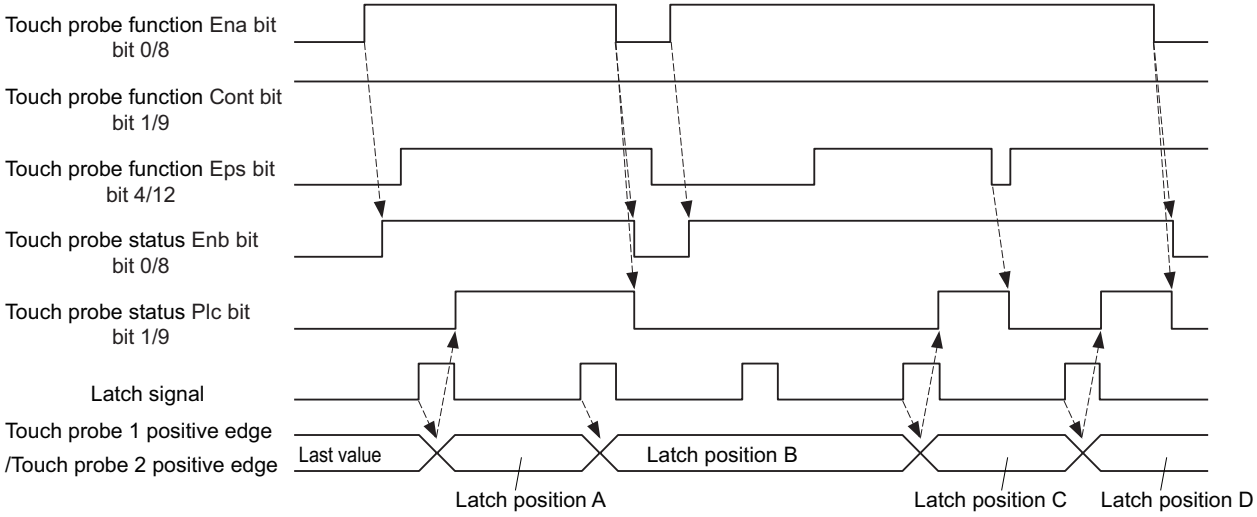

7-12 Encoder Dividing Pulse Output Function

The Encoder Dividing Pulse Output Function outputs the position information obtained from the encoder in the form of two-phase pulses (phase A and B) with a 90° phase difference. This function also supports Z-phase outputs.

Pulse Output Waveform

The following figure shows the waveforms of two-phase pulse outputs with 90° phase difference.

The maximum pulse output frequency is 4 Mpps.

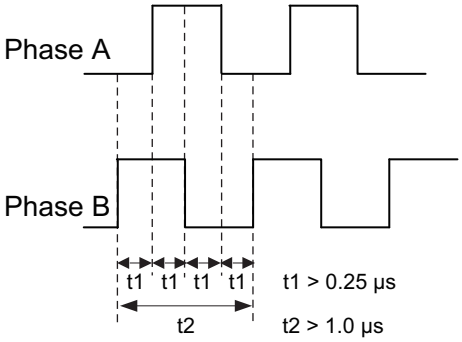

Pulse Output at Power ON

The following figure shows the pulses that are output when the power is turned ON.

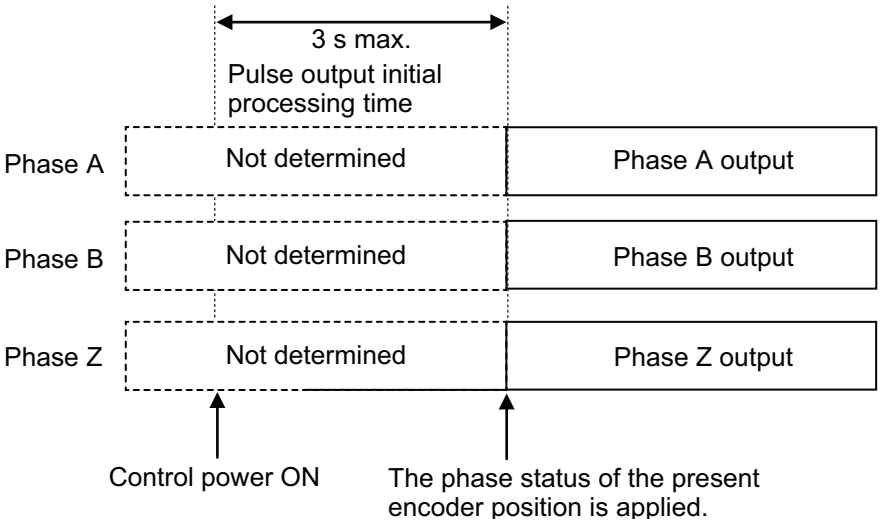

7-12-1 Objects Requiring Settings

Index (hex)	Subindex (hex)	Name	Description	Reference
4620	---	Encoder Dividing Pulse Output	Sets the encoder dividing pulse output.	P. 9-114
	01	Enable	Selects whether to enable or disable the encoder dividing pulse output function. 0: Disabled 1: Enabled	P. 9-114
	02	Dividing Numerator	Sets the number of output pulses per motor rotation.	P. 9-114
	03	Dividing Denominator	For applications for which the number of output pulses per rotation is not an integer, when this set value is set to a value other than 0, the number of output pulses per motor rotation can be set by the use of the dividing ratio which is calculated from the dividing numerator and dividing denominator.	P. 9-115
	04	Output Reverse Selection	Selects whether to reverse the encoder dividing pulse output or not. 0: Not reverse 1: Reverse	P. 9-115

7-12-2 Dividing Ratio

You can change the number of output pulses by setting the dividing ratio.

When Dividing Denominator (4620-03 hex) = 0

The number of output pulses is determined as follows when **Encoder Dividing Pulse Output - Dividing Denominator** (4620-03 hex) is set to 0. To enable **Dividing Numerator** (4620-02 hex), set the value from 0 to 262144. When you set the value to 262145 or more, this function is activated at 262144.

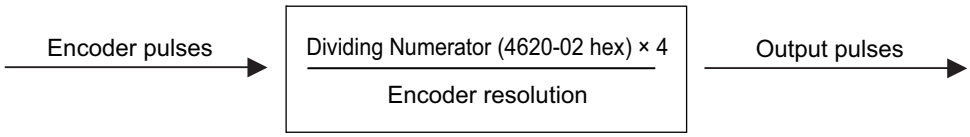

Number of output pulses per rotation = Encoder Dividing Numerator (4620-02 hex) × 4

When Dividing Denominator (4620-03 hex) ≠ 0

The number of output pulses is determined as follows when **Encoder Dividing Pulse Output - Dividing Denominator** (4620-03 hex) is set to a value other than 0.

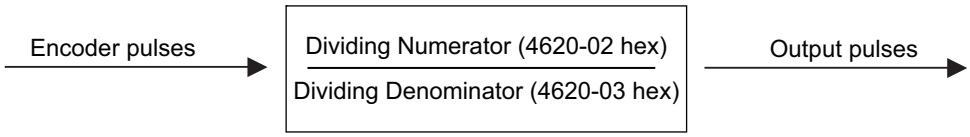

$$\text{Number of output pulses per rotation} = \frac{\text{Dividing Numerator (4620-02 hex)}}{\text{Dividing Denominator (4620-03 hex)}} \times \text{Encoder resolution}$$

7-12-3 Output Reverse Selection

You can use **Output Reverse Selection** (4620-04 hex) to reverse the output pulses.

Output Reverse Selection	CCW	CW
0: Not reverse	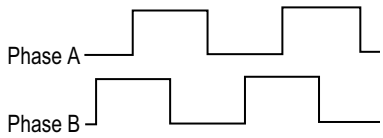	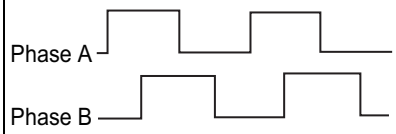
1: Reverse	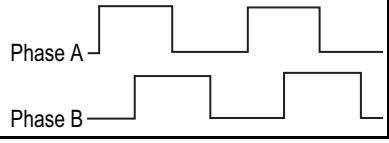	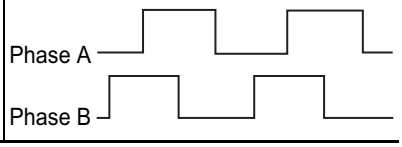

7-12-4 Z-phase Output

Phase Z is output in synchronization with phase A.

CCW	CW
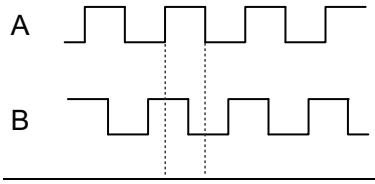	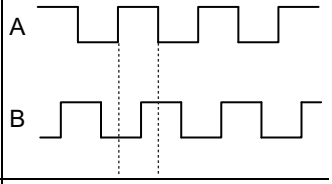
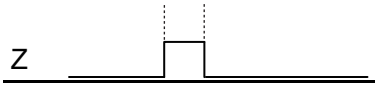	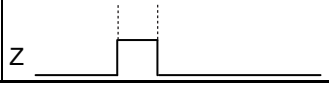

Precautions for Correct Use

- The maximum pulse output frequency is 4 Mpps. Use the function so that this frequency is not exceeded. If the maximum output frequency is exceeded, a Pulse Output Overspeed Error (Error No. 28.0) occurs.
- If the Dividing Denominator is not 0, set the values so that Dividing Numerator is equal to or smaller than Dividing Denominator. If the values are not set correctly, a Pulse Output Setting Error (Error No. 28.1) occurs.
- If you use phase Z when the Dividing Denominator is not 0, set the values so that the number of output pulses per rotation is a multiple of 4. If this condition is not met, phase Z is not output.

7-13 Dynamic Brake

The dynamic brake can be used to stop the Servomotor in the events such as drive prohibition input, Servo OFF, and occurrence of an error.

The dynamic brake stops the Servomotor quicker than a free-run stopping.

Precautions for Correct Use

- Do not use the dynamic brake frequently for deceleration operation because the dynamic brake is intended for the stop at the time of an error. Confirm the precautions that are given in *4-5 Adjustment for Large Load Inertia* on page 4-49 before use.
- Do not drive the Servomotor by the use of an external drive source when the power supply is OFF and the Dynamic brake is applied.
- The dynamic brake is intended for the stop at the time of an error and therefore it has a short-time rating.
  Do not use it for the stop in normal operation.
- The following frequency and number of times are the guideline for using the dynamic brake.
  Frequency of use: 3 minutes or more per activation
  Deceleration patterns: 1,000 times at rated rotation speed and applicable load inertia

7-13-1 Operating Conditions

The dynamic brake can be applied can be applied in the following cases.

- Drive prohibition
- Software position limit
- Servo OFF
- Main circuit power OFF
- Occurrence of error
- Control power supply OFF

7-13-2 Objects Requiring Settings

Index (hex)	Subin-dex (hex)	Name	Description	Refer-ence
3B10	---	Drive Prohibition	---	P. 9-61
	02	Stop Selection	Selects the operation when Positive Drive Prohibition or Negative Drive Prohibition is enabled.	
3B11	---	Software Position Limit	---	P. 9-62
	02	Stop Selection	Selects the operation when the software position limit is enabled.	

Index (hex)	Subin-dex (hex)	Name	Description	Refer-ence
3B20	---	Stop Selection	---	P. 9-64
	01	Shutdown Option Code	Selects the operation for the time when the PDS state machine is Shutdown. Mirror object of 605B hex	
	02	Disable Operation Option Code	Selects the operation for the time when the PDS state machine is Disable Operation. Mirror object of 605C hex	
	04	Fault Reaction Option Code	Selects the operation for the time when an error occurred in the Servo Drive (PDS state = Fault reaction active). Mirror object of 605E hex	

7-13-3 Description of Operation

This section describes the dynamic brake operation for each function.

Drive Prohibition

For the drive prohibition function, you can select the dynamic brake as a method to stop the Servomotor when Positive Drive Prohibition Input (POT) or Negative Drive Prohibition Input (NOT) is active.

Use the **Drive Prohibition** - **Stop Selection** (3B10-02 hex) for setting.

Stop Selection set value	During deceleration
	Deceleration method
2	The deceleration stop torque is used.
4	Stop according to the setting of Fault reaction option code

Software Position Limit

You can select the dynamic brake as a method to stop the Servomotor when the present position exceeds the specified movement range.

Use the **Software Position Limit** - **Stop Selection** (3B11-02 hex) for setting.

Stop Selection set value	During deceleration
	Deceleration method
2	The deceleration stop torque is used.
4	Stop according to the setting of Fault reaction option code

Main Circuit Power OFF

You can select the dynamic brake as a method to stop the Servomotor when the main circuit power is turned OFF (PDS state machine = Shutdown). Also, you can select the dynamic brake for the operation after stopping.

Use the **Stop Selection** - **Shutdown Option Code** (3B20-01 hex) for setting.

Set value	Deceleration operation		Operation after stopping
-7	Operation A*1	Deceleration stop (The deceleration stop torque is used.)	Free
	Operation B*1	Free-run	
-6	Operation A*1	Deceleration stop (The deceleration stop torque is used.)	Free
	Operation B*1	Dynamic brake operation	
-5	Operation A*1	Deceleration stop (The deceleration stop torque is used.)	Dynamic brake operation
	Operation B*1	Free-run	
-4	Operation A*1	Deceleration stop (The deceleration stop torque is used.)	Dynamic brake operation
	Operation B*1	Dynamic brake operation	
-3	Dynamic brake operation		Free
-2	Free-run		Dynamic brake operation
-1	Dynamic brake operation		Dynamic brake operation
0	Free-run		Free

*1. The Servomotor stops according to the setting of Operation B while in an STO status that does not cause the deceleration stop or when the P-N Voltage drops to the specified value or lower. In other cases, the Servomotor decelerates to stop according to the setting of Operation A.

Servo OFF

You can select the dynamic brake as a method to stop the Servomotor when the Servo is turned OFF (PDS state machine = Disable operation). Also, you can select the dynamic brake for the operation after stopping.

Use the **Stop Selection - Disable Operation Option Code** (3B20-02 hex) for setting.

Set value	Deceleration operation	Operation after stopping
-6	Deceleration stop (The deceleration stop torque is used.)	Free
-4		Dynamic brake operation
-3	Dynamic brake operation	Free
-2	Free-run	Dynamic brake operation
-1	Dynamic brake operation	Dynamic brake operation
0	Free-run	Free

Occurrence of Error

You can select the dynamic brake as a method to stop the Servomotor when an error occurs (PDS state = Fault reaction active). Also, you can select the dynamic brake for the operation after stopping.

Use the **Stop Selection** - **Fault Reaction Option Code** (3B20-04 hex) for setting.

Set value	Deceleration operation		Operation after stopping
-7	Operation A*1	Deceleration stop (The deceleration stop torque is used.)	Free
	Operation B*1	Free-run	
-6	Operation A*1	Deceleration stop (The deceleration stop torque is used.)	Free
	Operation B*1	Dynamic brake operation	
-5	Operation A*1	Deceleration stop (The deceleration stop torque is used.)	Dynamic brake operation
	Operation B*1	Free-run	
-4	Operation A*1	Deceleration stop (The deceleration stop torque is used.)	Dynamic brake operation
	Operation B*1	Dynamic brake operation	
-3	Dynamic brake operation		Free
-2	Free-run		Dynamic brake operation
-1	Dynamic brake operation		Dynamic brake operation
0	Free-run		Free

*1. Operation A and B indicate whether or not to perform the deceleration stop when an error occurs. If an error that causes the deceleration stop occurs, the deceleration stop is performed according to the setting of Operation A. If an error that does not cause the deceleration stop occurs, the dynamic brake operation or free-run is performed according to the setting of Operation B. For details on errors, refer to *12-3 Errors* on page 12-10.

Control Power Supply OFF

The dynamic brake is applied when the control power supply is turned OFF.

When the control power supply is turned ON, the dynamic brake operation or free-run is performed according to the setting of **Stop Selection** – **Shutdown Option Code** (3B20-01 hex).

Precautions for Correct Use

- Do not drive the Servomotor by the use of an external drive source when the power supply is OFF and the dynamic brake is applied.

7-14 Command Compensation Function for Communications Error

If a target position is lost because of a communications error, this function corrects the next target position on the basis of the previous target position.

7-14-1 Operating Conditions

The communications error period command correction function is always enabled under the following conditions.

- The mode of operation is Cyclic synchronous position mode (csp)
- The synchronous mode is Distributed Clock (DC) Mode

This function corrects a target position so that the **Position Command** – **Velocity** (3010-83 hex) becomes equal to the previous velocity. When the mode of operation is Cyclic synchronous velocity mode (csv) or Cyclic synchronous torque mode (cst), the previous command is retained.

7-14-2 Operation Example

The following is an operation example. The velocities corrected by this function are closer to the **Position Command** – **Velocity** (3010-83 hex), which is expected when no communications error occurs, than the velocities not corrected.

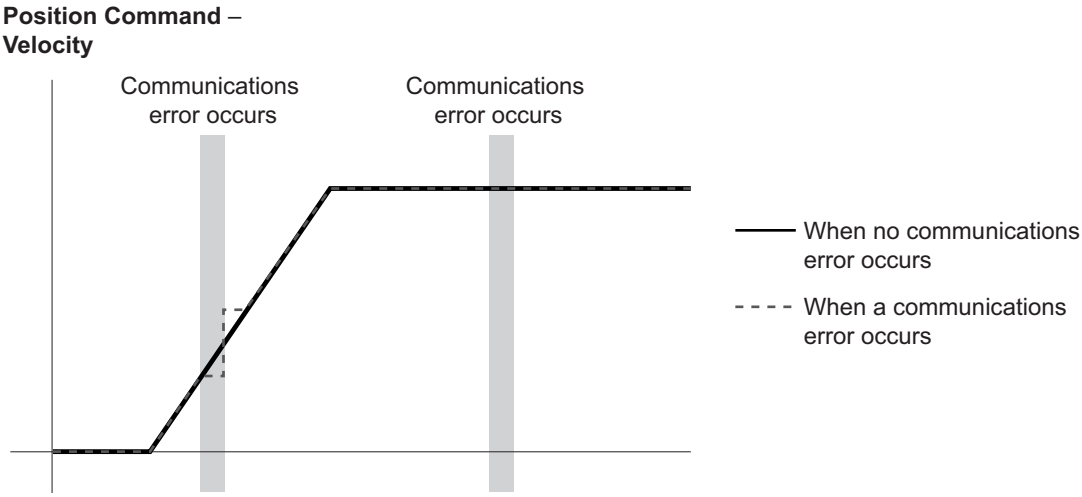

Without this function, the target positions will not be corrected and become as follows.

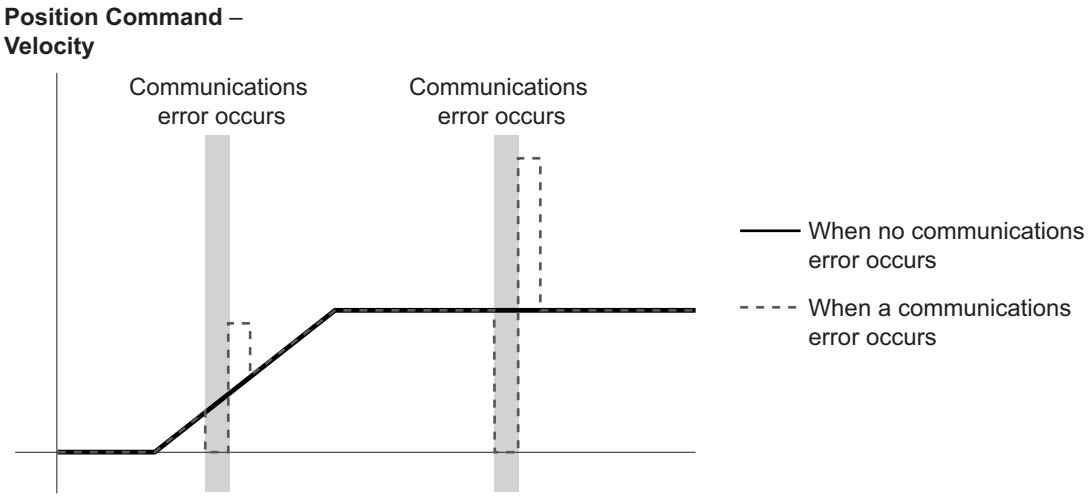

8

Safety Function

This section explains the Servo Drive safety function.

8-1 Outline of Safety Functions 8-3
8-1-1 Description of Safety Functions 8-3
8-1-2 Configuration for Safety System 8-4
8-1-3 Network Connection and Settings 8-7
8-1-4 Operating Procedure for Safety Function 8-8
8-1-5 Safety Reaction Time for Safety Distance 8-11
8-1-6 Data Necessary for Designing Programs of Each Controller 8-12
8-1-7 PFH 8-15
8-1-8 Position/Velocity Data Monitored by Safety Functions 8-16
8-1-9 Precaution on Use 8-19
8-1-10 Procedure for Reset of Safety Error 8-20
8-1-11 Safety Program 8-21

8-2 Safe Torque OFF (STO) Function 8-22
8-2-1 STO Function via Safety Input Signals 8-23
8-2-2 STO Function via EtherCAT Communications 8-32
8-2-3 STO with SBC Functions via EtherCAT Communications 8-36

8-3 Safe Stop 1 (SS1) Function 8-39
8-3-1 Objects Requiring Settings 8-41
8-3-2 Operation Procedure 8-43
8-3-3 Operation Timing 8-44
8-3-4 Example of Safety Program 8-47
8-3-5 Concurrent Use of SS1 Function and SBC Function 8-48

8-4 Safe Stop 2 (SS2) Function 8-54
8-4-1 Objects Requiring Settings 8-55
8-4-2 Operation Procedure 8-57
8-4-3 Operation Timing 8-58
8-4-4 Example of Safety Program 8-61

8-5 Safe Operating Stop (SOS) Function 8-62
8-5-1 Objects Requiring Settings 8-62
8-5-2 Operation Procedure 8-63
8-5-3 Operation Timing 8-64
8-5-4 Example of Safety Program 8-67

8-6 Safely-limited Speed (SLS) Function 8-68
8-6-1 Objects Requiring Settings 8-70
8-6-2 Operation Procedure 8-72
8-6-3 Operation Timing 8-73
8-6-4 Example of Safety Program 8-78
8-7 Safely-limited Position (SLP) Function 8-79
8-7-1 Configuration Example for SLP System 8-79
8-7-2 Objects Requiring Settings 8-81
8-7-3 Operation Procedure 8-84
8-7-4 Operation Timing 8-85
8-7-5 Example of Safety Program 8-88
8-7-6 Setting of Safety Origin Position 8-89
8-8 Safe Direction (SDI) Function 8-102
8-8-1 Objects Requiring Settings 8-102
8-8-2 Operation Procedure 8-103
8-8-3 Operation Timing 8-104
8-8-4 Example of Safety Program 8-110
8-9 Safe Brake Control (SBC) Function 8-112
8-9-1 Configuration Method for SBC 8-113
8-9-2 Objects Requiring Settings 8-115
8-9-3 Operation Procedure 8-116
8-9-4 Connection Method 8-117
8-9-5 Connection Examples 8-119
8-9-6 Operation Timing 8-120
8-9-7 SBC Power Monitor 8-120
8-9-8 Safety Relay Stuck Error Detection 8-122
8-10 Safety Position/Velocity Validation Monitoring Function 8-124
8-10-1 Details about Validation Monitoring 8-124
8-10-2 Objects Requiring Settings 8-125
8-10-3 Operation Procedure 8-125
8-10-4 Operation Timing 8-126

8-1 Outline of Safety Functions

This section describes connections, settings necessary for use of safety functions and the information about configuration of safety system.

8-1-1 Description of Safety Functions

Servo Drive has the following safety functions:

Function	Description	Reference
Safe Torque OFF (STO)	This function is used to cut off a motor current and stop the motor.	P. 8-22
Safe Stop 1 (SS1)	This function is used to stop a motor by activating STO function at any timing after receiving a command from a safety controller.	P. 8-39
Safe Stop 2 (SS2)	This function is used to monitor a motor's stop by activating SOS function at any timing after receiving a command from a safety controller.	P. 8-54
Safe Operating Stop (SOS)	This function is used to monitor that a motor stops at any position. Both a position and velocity are monitored. Excessive limit value error occurs when the motor operates from a position where it stops.	P. 8-62
Safely-Limited Speed (SLS)	This function is used to monitor a safety present motor velocity. When the safety present motor velocity exceeds the velocity limit for monitoring, excessive limit value error occurs.	P. 8-68
Safely-Limited Position (SLP)	This function is used to monitor a safety present position. Excessive limit value error occurs when the position surpass a range for monitoring.	P. 8-79
Safe Direction (SDI)	This function is used to monitor a motor rotation direction. Excessive limit value error occurs when the motor rotates toward the banned rotating direction.	P. 8-102
Safe Brake Control (SBC)	This function is used to provide safety output for a holding brake. The function can be used with STO, SS1 functions and the brake operation.	P. 8-112

Servo Drives have the following two types of STO functions. Use either or both functions according to your safety device configuration.

- STO function by safety input signals
- STO function via EtherCAT communications

When you use just STO function by safety input signals, you do not need a setting related EtherCAT network described in section *8-1-2 Configuration for Safety System* on page 8-4 to *8-1-4 Operating Procedure for Safety Function* on page 8-8.

Achievable safety levels for each safety function at maximum are shown as the below table.

Function	Achievable safety level
STO	SIL3/PLe
SS1	SIL3/PLe
SS2	SIL3/PLe
SOS	SIL3/PLe*1

Function	Achievable safety level
SLS	SIL3/PLe*1
SLP	SIL3/PLe*2
SDI	SIL3/PLe*1
SBC	SIL3/PLe*3

*1. Achievable safety level varies in a basic control for use. Refer to *8-10 Safety Position/Velocity Validation Monitoring Function* on page 8-124.

*2. Achievable safety level varies in Safety Origin Position Determination Method or SOPT input devices for use. Refer to *8-7 Safely-limited Position (SLP) Function* on page 8-79 and *8-10 Safety Position/Velocity Validation Monitoring Function* on page 8-124.

*3. Achievable safety level varies in Brake structure. Refer to *8-9 Safe Brake Control (SBC) Function* on page 8-112.

8-1-2 Configuration for Safety System

To make devices go into safe state, a combined control among a safety controller, a standard controller and a Servo Drive is required.

Typical roles of each device are shown as below.

Device	Role
Safety Controller	• Monitor safety input and output • Notify a standard controller of states of safety input and output • Issue commands to the Servo Drive to activate and reset safety functions • Issue commands to the Servo Drive to reset errors of safety functions
Standard Controller	• Issue commands to the Servo Drive to turn Servo ON/OFF and reset errors • Issue command to the Servo Drive to control a specified position, velocity and torque
Servo Drive	• Turn Servo ON/OFF and reset errors after receiving commands from the standard controller • Control the Servomotor after receiving commands from the standard controller • Activate and interrupt safety functions after receiving commands from the safety controller • Reset errors of safety functions after receiving commands from the safety controller • Stop the Servomotor when an error occurs

A procedure for the control is described as follow.

1 The safety controller detects the following cases with a safety sensor or safety switch.
- When workers entered exclusion zones
- When workers is about touch hazardous sites of the device
- When workers come closely to the devices for the purpose of a check of devices/products, maintenance and supply of materials

2 The safety controller notifies the standard controller of the detected data.

3 The standard controller issues commands to the Servo Drive to decelerate or stop. At the same time, the safety controller issues commands to the Servo Drive to activate safety functions for use.

4 The Servo Drive receives and executes the commands from both controllers.

Thus, a safety controller and a standard controller must issue commands to a Servo Drive at an appropriate timing according to states of switches, sensors and devices, and then have the programs to issue the commands.

To secure the combined operation between a safety controller and a standard controller, design programs for each device with consideration of the following times. Without this consideration mentioned earlier, STO may be active and an Excessive Limit Value Error (Error No. 71.03) may occur.

- Time until safety functions starts the activations

  It refers to “Time until a safety controller issues command to activate safety functions + Delay time of safety functions”.
- Delay time of safety functions

  Time until STO becomes active or a Servo Drive starts monitoring after it receives commands of safety functions.

As for the details, refer to *8-1-6 Data Necessary for Designing Programs of Each Controller* on page 8-12.

This section describes a flow of control with an example of SLS function.

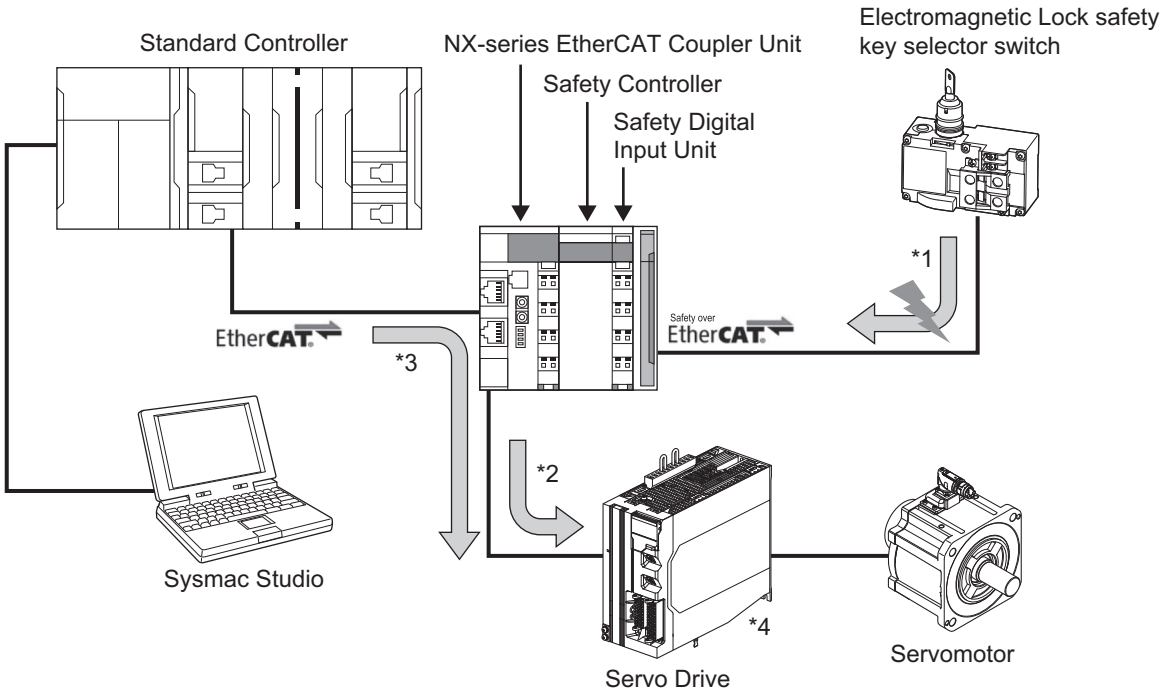

Safety system configuration equipment	Model
Standard Controller	NX701
EtherCAT Coupler Unit	NX-ECC201 NX-ECC202
Safety Controller	NX-SL3300 NX-SL3500
Safety Digital Input Unit	NX-SIH400
Electromagnetic Lock safety key selector switch	A22LK
Servo Drive	R88D-1SAN

Safety system is achieved in the following controls with use of the equipment.

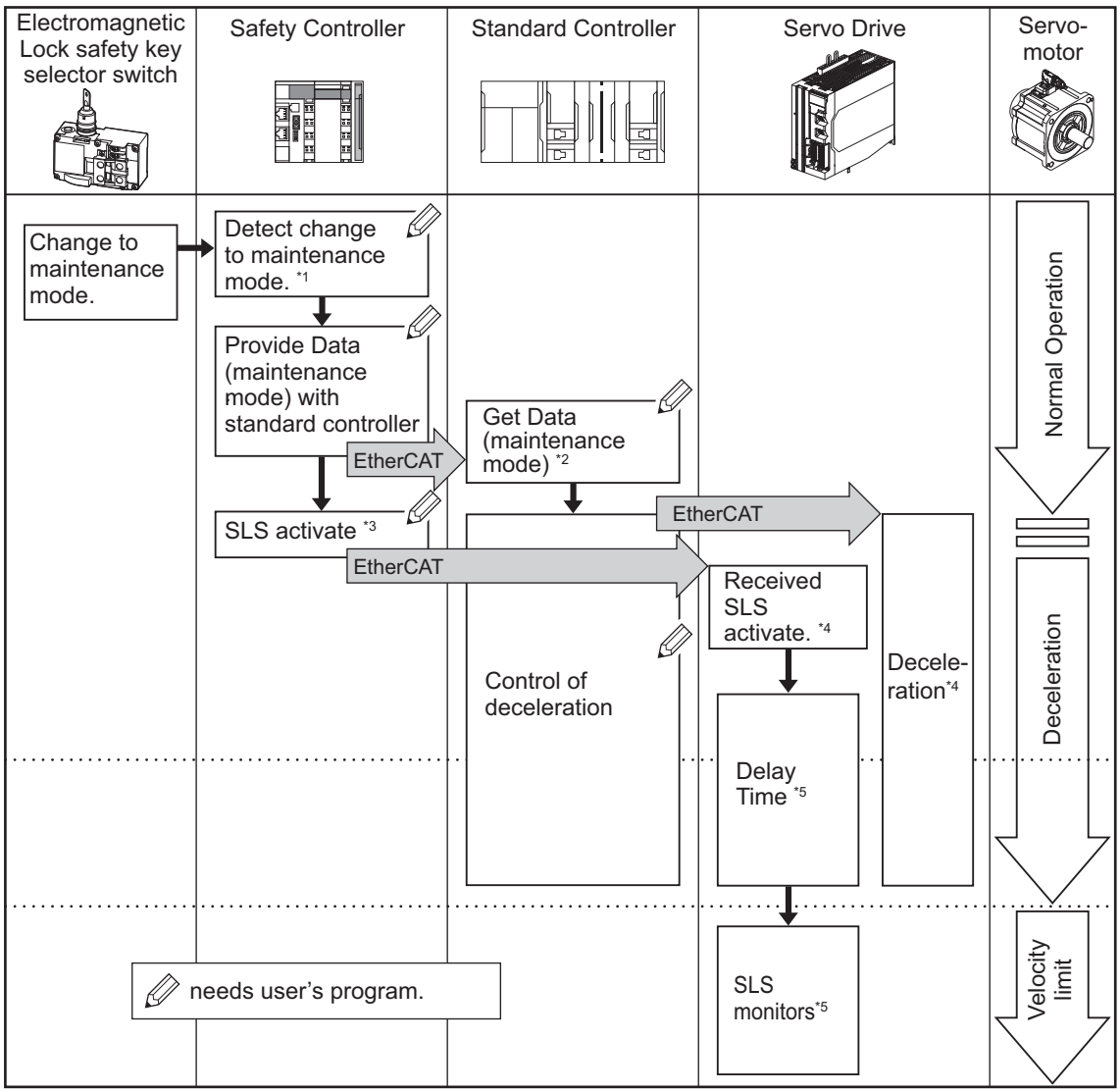

*1. The safety key selector switch and the safety controller detect that workers come closer to devices due to the reason such as maintenance, etc.

*2. The standard controller reads data from the safety controller and checks a switch to maintenance mode. In such case, it issues a command to decelerate a velocity of the Servomotor and gives the command to the Servo Drive.

*3. The safety controller issues/gives a command to activate SLS function to the Servo Drive.

*4. The Servo Drive controls the motor's deceleration, following the command from the standard controller. In addition, it activates SLS function after receiving the command to activate SLS from the safety controller.

*5. The Servo Drive starts monitoring of the motor's velocity after the delay time elapsed from the receipt of the command to activate SLS.

Precautions for Correct Use

- Safety programs for a safety controller shall be created and controlled to achieve controls mentioned earlier *1 and *3.
  In the same way, user's programs for a standard controller shall be created and controlled to achieve controls mentioned earlier *2.
  These examples are some of control methods to configure safety system. Create and control appropriate programs according to user's equipment and systems.

8-1-3 Network Connection and Settings

Connect the EtherCAT network, and configure the EtherCAT master and safety controller to use safety functions in Servo Drives. For safety controller, the controller that supports FSoE master function can be used.

You can easily build the safety system when you use Omron's Sysmac products.

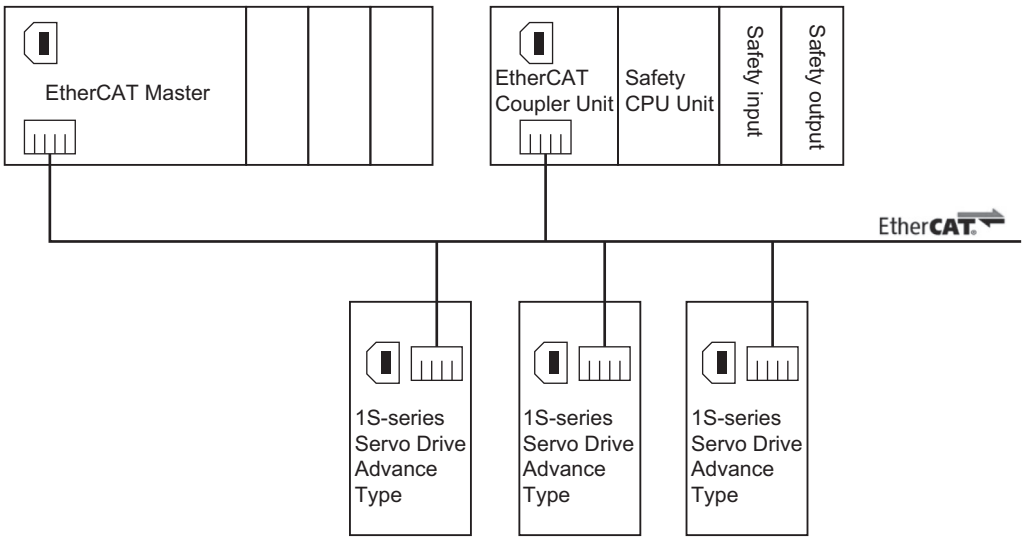

Settings on Sysmac Studio

In Sysmac Studio, the following batch settings can be done easily; settings of the network configurations of the designed safety systems, safety PDO mapping and each setting of safety functions, etc. Carry out these settings by the procedure mentioned below.

1. EtherCAT Network configurations
2. PDO Mapping settings
3. Safety functions settings
4. Safety I/O map settings
5. Designing safety programs for safety controller
6. Designing user programs for standard controller

As for the details about the setting procedure on Sysmac Studio, refer to *A-5 Use Case of Safety Function* on page A-207.

8-1-4 Operating Procedure for Safety Function

Addition of Safety PDO

Add the following safety PDO to Servo Drive PDO assignment for EtherCAT network setting **Sync Manager 2 PDO Assignment** (1C12 hex) and **Sync Manager 3 PDO Assignment** (1C13 hex) for use of safety functions.

- RxPDO:17th receive PDO Mapping (1610 hex)
- TxPDO:17th transmit PDO Mapping (1A10 hex)

You can set the safety PDO from a standard controller.

As for the setting method, refer to *5-4 Process Data Objects (PDOs)* on page 5-7.

As for the default setting of safety PDO mapping, refer to *5-4-5 Safety PDO Mapping* on page 5-12.

Setting of Fixed Safety PDO

Set safety functions for use to the added safety PDO. You can carry out these settings from a safety controller.

The following table shows the default settings.

Index (hex)	Subindex (hex)	Fixed assignment safety function	Default setting (hex)
1610	---	17th receive PDO Mapping	---
	01	FSoE Master CMD	E7000108 (Fixed)
	02	STO command	66400001 (Fixed)
	03	SS1 command 1	66500101 (Fixed)
	04	SS2 command 1	66700101 (Fixed)
	05	SOS command 1	66680101 (Fixed)
	06	Reserved	---
	07	SDI positive direction command	66D00001 (Fixed)
	08	SDI negative direction command	66D10001 (Fixed)
	09	error acknowledge	66320001 (Fixed)
1A10	---	17th transmit PDO Mapping	---
	01	FSoE Slave Command	E6000108 (Fixed)
	02	STO status	66400001 (Fixed)
	03	Reserved	---
	04	Reserved	---
	05	SOS status 1	66680101 (Fixed)
	06	Reserved	---
	07	SDI positive direction status	66D00001 (Fixed)
	08	SDI negative direction status	66D10001 (Fixed)
	09	error status	66320001 (Fixed)

As for safety functions for non-use, set **Safety Function Disable Setting - 1st Byte Disable Setting** (4F20-01 hex) to 1:disable.

Index (hex)	Subindex (hex)	Name	Description	Reference
4F20	---	Safety Function Disable Setting	Disable safety functions assigned to safety PDO mapping.	P. 9-140
	01	1st Byte Disable Setting	Disable safety functions to safety PDO 1st Byte. bit 1: SS1 command 1 bit 2: SS2 command 1 bit 3: SOS command 1 bit 5: SDI positive direction command bit 6: SDI negative direction command 0: Enable 1: Disable	

Setting of Optional Safety PDO

Assign optional instances for safety functions to the below safety PDO mapping when you use safety functions other than the safety functions assigned to fixed PDO. You can carry out these settings from a safety controller.

The following table shows the default settings.

Index (hex)	Subindex (hex)	Optional assignment safety function	Default setting (hex)
1610	---	17th receive PDO Mapping	---
	0A	Optional instances for assignment	00000001 (not assigned)
	0B		
	0C		
	0D		
	0E		
	0F		
	10		
	11		
1A10	---	17th transmit PDO Mapping	---
	0A	Optional instances for assignment	00000001 (not assigned)
	0B		
	0C		
	0D		
	0E		
	0F		
	10		

When optional instances are assigned, set index and subindex for safety functions to be used in the following ways.

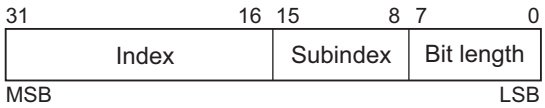

Bit 16 to 31: Index of safety function object to be used
Bit 8 to 15: Subindex of safety function object to be used
Bit 0 to 7: 01 (Bit length = 1) Fixed

Assignable safety functions and instances are followings.

Safety function	Assignable instance	Setting value
SS1	SS1 command 1 to 8	66500101 to 66500801
SS2	SS2 command 1 to 8	66700101 to 66700801
SOS	SOS command 2 to 8	66680201 to 66680801
SLS	SLS command 1 to 8	66900101 to 66900801
SLP	SLP command 1 to 8	66A00101 to 66A00801
SBC	SBC command 1	66600101

Additional Information

There are eight instances on safety functions except for STO, SDI and SBC. These instances are activated independently.

Setting of Safety Function

This section describes the details about the setting of each safety function set in the procedures mentioned earlier. For details, refer to each section of safety functions.

Precautions for Correct Use

- In the following cases, RxPDO mapping error (Error No.90.07) will occur.
  - The fixed assignment of **17th receive PDO Mapping** (1610 hex) is changed
  - The same instance of the safety function is assigned to **17th receive PDO Mapping** (1610 hex)
  - The safety function is assigned to PDO mapping objects other than **17th receive PDO Mapping** (1610 hex)
- In the following cases, TxPDO mapping error (Error No.90.08) will occur.
  - The fixed assignment of **17th transmit PDO Mapping** (1A10 hex) is changed,
  - The same instance of the safety function is assigned to **17th transmit PDO Mapping** (1A10 hex),
  - The safety function is assigned to the PDO mapping objects other than **17th transmit PDO Mapping** (1A10 hex).
- For **Deactivate Safety Function Setting - 1st Byte Disable Setting** (4F20-01 hex), when you set SS2 command 1 to activate and SOS command 1 to deactivate, Safety Function Setting Error (Error No. 71.00) occurs.

8-1-5 Safety Reaction Time for Safety Distance

Safety reaction time (Safety response performance) is the maximum time required for cutting off outputs with consideration for failures and breakdowns in safety chain[*1]. Under the safety system design, safety distance can be calculated from the safety reaction time. In all segments of the safety chain, the maximum time length, from safety sensor/switch input to actuator response time, must satisfy the required specification.

*1. Safety chain means a logical connection to achieve safety functions linking from safety input equipment to safety output equipment through Safety Controller.

The safety reaction time is the sum of following items: (a) Safety Sensor/Switch response time, (b) Safety Input Unit/Slave response time, (c) Network response time, (d) Safety Controller response time, (e) Safety Output Unit/Slave response time, and (f) Actuator response time. The number/time of each item depends on the configuration of the safety chain.

As for the detail, refer to the *NX-series Safety Control Unit User's Manual* (Cat. No. Z930).

This section describes safety reaction time of Servo Drive.

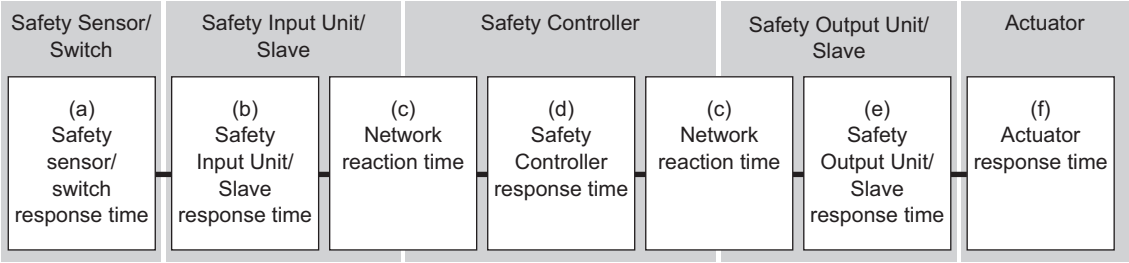

Symbol	Time element	Description
(e)	Safety Output Unit/Slave response time	The following values are the processing time of 1S Servo Drive Advance Type: STO: 7 ms SS1: 7 ms + **SS1 time to STO**

8-1-6 Data Necessary for Designing Programs of Each Controller

To secure a combined control between a safety controller and a standard controller, design programs for each controller and install the Servo Drive with the consideration of the followings.

Time Length Required to Activate the Safety Function

The minimum time length is required to activate the safety functions after the safety controller sent command signals.

The minimum time length to activate the safety function = EtherCAT Communication Cycle

The safety controller issues commands to activate safety functions to the Servo Drive, considering this shortest time mentioned earlier and the timing of completion of deceleration by the motor's control.

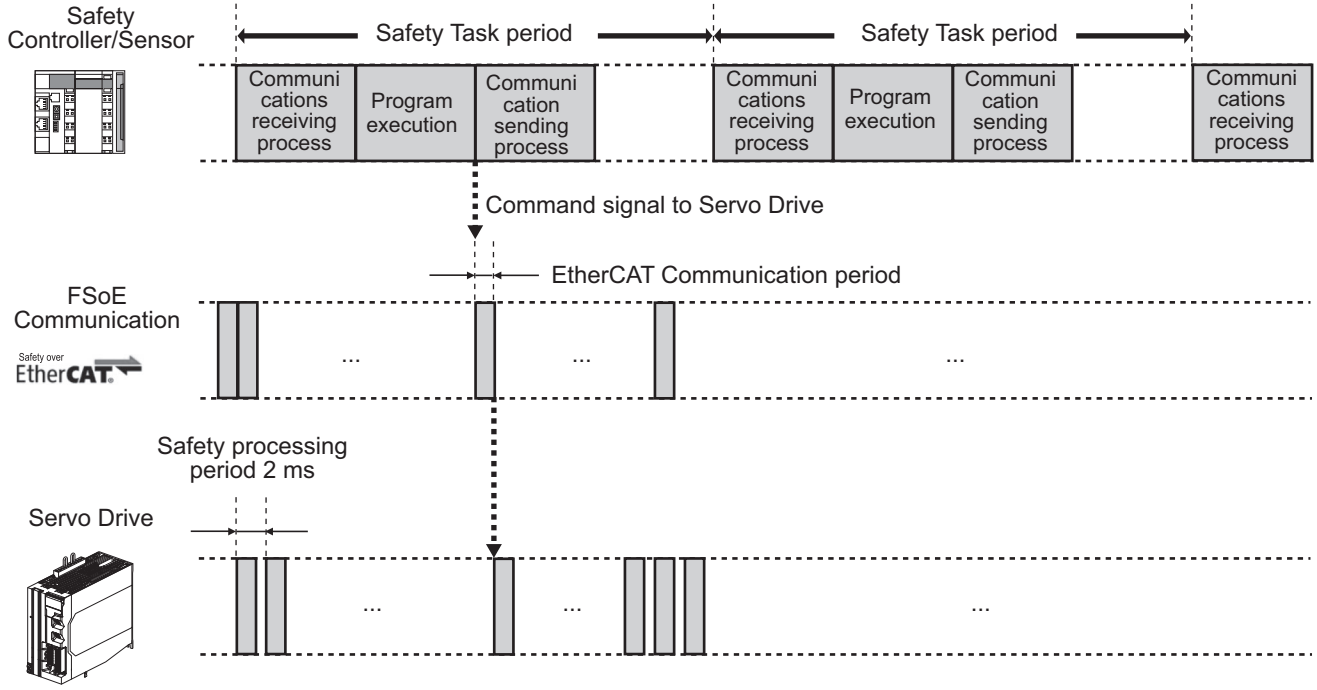

Delay Time of Safety Functions

“The delay time” setting is required for SS1, SS2, and SLS functions to activate their safety functions. The delay time is used for the standard controller to decelerate and stop the motor rotation. Calculate times needed for the deceleration according to user’s program and set the time to the Servo Drives. If you use the delay time, the safety controller saves time to calculate the time of the deceleration/stop. That enables a design of easy program.

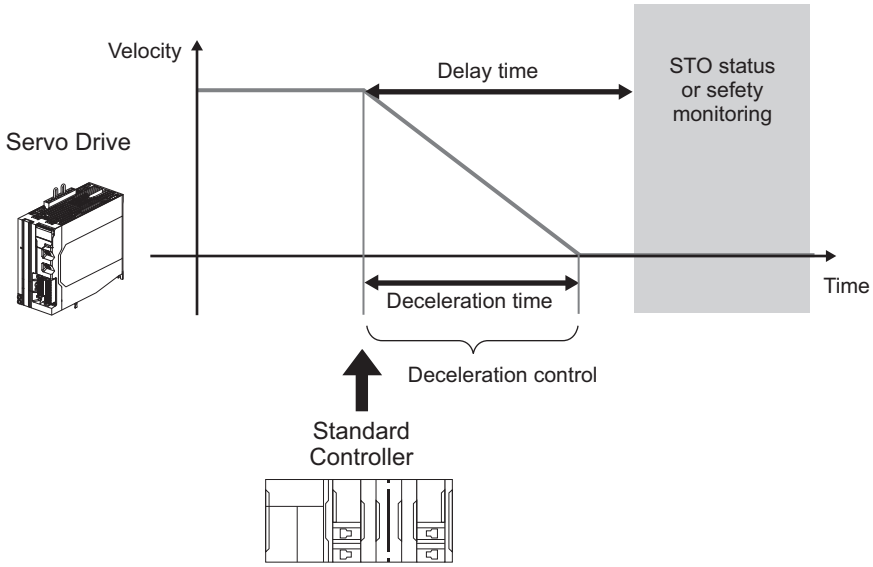

Timing to Issue a Command to Activate Safety Functions by the Safety Controller

The timing to issue a command to activate safety functions by the safety controller varies in existence or non-existence of delay time shown in the following figure.

SS1, SS2 or SLS functions can detect automatically that the Servomotor decelerates up to the set velocity. Also they can start STO functions and the safety monitoring function. In such case, the command is issued if there is the delay time.

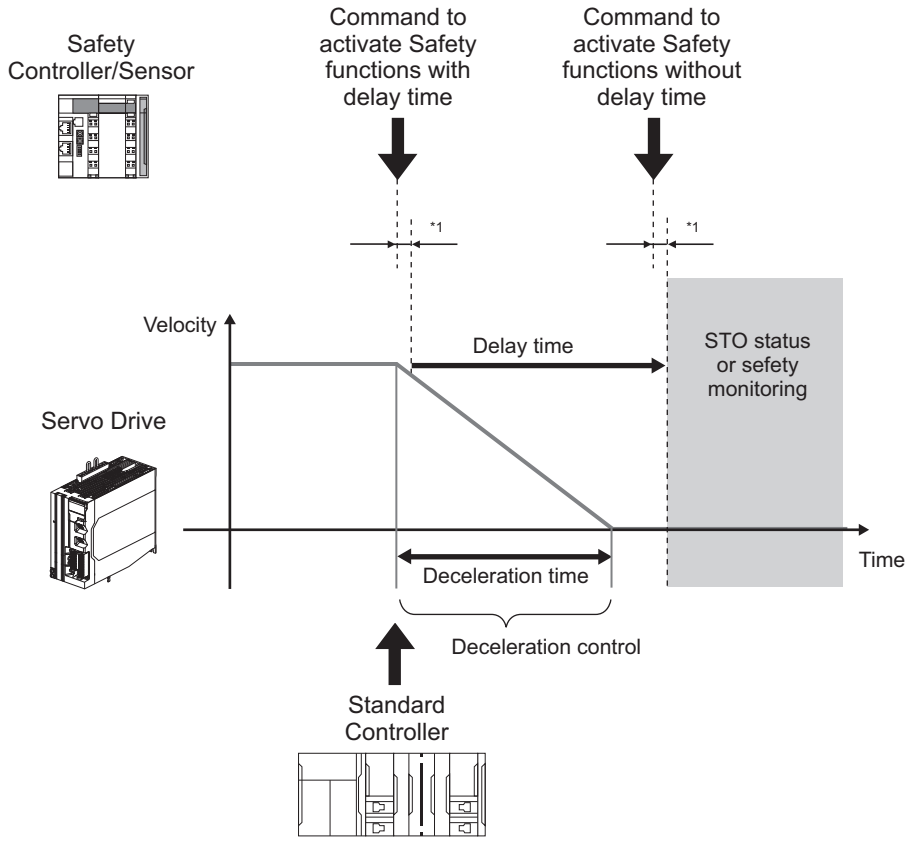

*1. The shortest time until the safety functions are activated.

8-1-7 PFH

The PFH value of using STO/SS1/SBC is 1.1x 10^{-8} [1/h].

But the PFH value of using SS2/SOS/SLS/SDI/SLP is 4.2 x 10^{-8} [1/h].

Even the PFH value of using multiple functions including SS2/SOS/SLS/SDI/SLP is 4.2 x 10^{-8} [1/h].

Example	PFH
Use STO Function via EtherCAT Communications only	1.1x 10^{-8} [1/h]
Use STO Function via Safety Input Signals and STO Function via EtherCAT Communications	1.1x 10^{-8} [1/h]
Use Safely-limited Speed (SLS) Function only	4.2 x 10^{-8} [1/h]
Use STO Function via EtherCAT Communications and Safe Operating Stop (SOS)	4.2 x 10^{-8} [1/h]
Use Safely-limited Speed (SLS) and Safe Operating Stop (SOS)	4.2 x 10^{-8} [1/h]

Precautions for Correct Use

As for updated PHF

Confirm http://www.ia.omron.com/support/sistemalibrary/index_jp.html.

8-1-8 Position/Velocity Data Monitored by Safety Functions

Safety Present Motor Velocity, **Safety Present Pulse Position** and **Safety Present Position** monitored by safety functions have each characteristic.

Safety Present Motor Velocity

Safety Present Motor Velocity (4F1A-00 hex), which is used for operations each of SS1, SS2, SOS, SLS and SDI functions and for a monitoring range setting, is different from **Present Motor Velocity** (3221-82 hex) and **Velocity actual value** (606C-00 hex) as shown below explanation.

● Update Cycle

Safety Present Motor Velocity is 2 ms while **Present Motor Velocity** and **Velocity actual value** are 125 μs. Due to this difference of the update cycles, even if **Present Motor Velocity** and **Velocity actual value** momentarily exceed a monitoring velocity by monitoring functions, in some cases, **Safety Present Motor Velocity** does NOT exceed the monitoring velocity. Also, **Safety Present Motor Velocity** may be displayed about 7% larger than **Present Motor Velocity** (3221-82 hex).

Read **Safety Present Motor Velocity** when you adjust a monitoring range and survey causes of safety functions errors and the mal-functions.

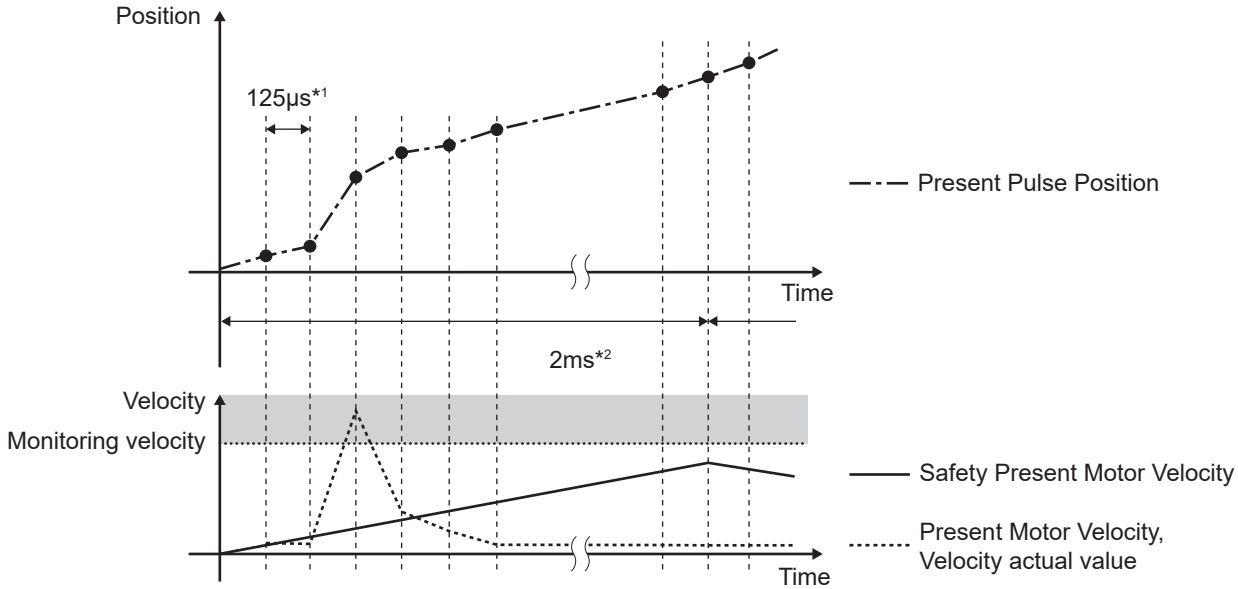

*1. Update cycle of **Present Motor Velocity** and **Velocity actual value**

*2. Update cycle of **Safety Present Motor Velocity**

Safety Present Pulse Position

Safety Present Pulse Position (4F18-00 hex), which is used for setting monitoring ranges for SS2, SOS and SDI functions and for determining safety origin position with SLP function, is different from **Position actual internal value** (6063-00 hex).

Reference of Position Data

Safety Present Pulse Position does NOT restore the position data of **Encoder - Multi-rotation Data** (4510-85 hex) while it restores the position data of **Encoder - One-rotation Data** (4510-84 hex) when the power supply is turned ON. Therefore, there is a difference between the multi-rotation data and **Position actual internal value** when you use a Servomotor with the data of **Encoder - Operation Selection when Using Absolute Encoder** (4510-01 hex) = 0 or 2. When you convert the data of **Safety Present Pulse Position** to that of **Position actual internal value**, use the following formulas in accordance with settings of each motor rotation direction.

In the case of **Basic Functions - Motor Rotation Direction Selection** (3000-01 hex) and **Safety Motor Rotation Direction Selection** (4F03-00 hex) = 1 (CCW direction setting):

Position actual internal value = Multi-rotation Data × Resolution per Rotation + Resolution per Rotation + **Safety Present Pulse Position**

In the case of **Basic Functions - Motor Rotation Direction Selection** (3000-01 hex) and **Safety Motor Rotation Direction Selection** (4F03-00 hex) = 0 (CW direction setting):

Position actual internal value = (Multi-rotation Data × Resolution per Rotation + Resolution per Rotation - **Safety Present Pulse Position**) × (-1)

When you use a Servomotor with the data of **Encoder - Operation Selection when Using Absolute Encoder** (4510-01 hex) = 1, after the power supply ON, **Safety Present Pulse Position** restores the encoder position data within one rotation as mentioned earlier while **Position actual internal value** is Zero. Therefore, in such case, when you subtract **Safety Present Pulse Position** while FSoE communication is established from **Safety Present Pulse Position**, the data equivalent to **Position actual internal value** can be converted.

Update Cycle

Safety Present Pulse Position is 2 ms while **Position actual internal value** is 125 µs.

Read **Safety Present Pulse Position** when you adjust a monitoring range and survey causes of safety functions errors and the mal-functions.

Safety Present Position

Safety Present Position (4F19-00 hex), which is used for setting monitoring ranges with SLP function, is different from **Position actual value** (6064-00 hex).

Reference of Position Data

Encoder position is counted with safety origin position Zero.

Zero is always displayed until the safety origin position is determined.

Update Cycle

Safety Present Position is 2 ms while **Position actual value** is 125 μs.

Read **Safety Present Position** when you adjust a monitoring range of SLP function and survey causes of the mal-functions.

Relation between Safety Position/Velocity Data and each Safety Functions

Data for use on each safety function is shown in the below table.

Safety Position/Velocity Data	Safety Monitoring Function					
	SS1	SS2	SOS	SLS	SLP	SDI
Safety Present Motor Velocity	√	√	√	√		√
Safety Present Pulse Position			√		√	√
Safety Present Position					√	

Precautions for Correct Use

The data of **Safety Present Motor Velocity**, **Safety Present Pulse Position**, **Safety Present Position** is displayed as Zero until FSoE communications is established.

8-1-9 Precaution on Use

In Test Run and Adjustment

Deactivate safety functions when you use a function for adjustment of the Servo Drive. Otherwise, you may face a failure for adjustment of the Servo Drive.

In System Configuration and Its Operation

- When you use safety functions, after FSoE communication is established, set all commands of safety functions mapped to safety PDO to *1* (Reset).
- When external forces (e.g. force of gravity on a vertical axis) are applied to a motor after STO function is activated, the motor runs. In such case, take safety measures like providing external brakes, etc. Take precautions that a motor with a brake is used only for holding and cannot be used for controlling.
- Even if external forces are not applied, when **Stop Selection** - **Shutdown Option Code** (3B20-01 hex) is set to free-run (with the dynamic brake deactivate), the motor turns free-run and the stop distance becomes longer.
- Due to failures of power transistor, a motor may operate within the range 180 degrees max. of electrical angle.
- When STO functions, the power supply to the Servo Drive is neither cut off nor electrically insulated while the power supply to a motor is cut off. When you conduct Servo Drive maintenance, cut off the power supply to the Servo Drive separately.
- When you use STO function and SBC function, confirm that the each function operates once every three months.
- Design a system with the safety functions, which conforms to the related safety standards and specifications in the user's manuals that you thoroughly understand.
- Qualified engineers must carry out system building and setting for the related safety area. Verify that the systems are installed as expected while testing when you use the systems.
- Comply with descriptions of specifications, precautions and user's manuals when you use safety equipment that is appropriately selected. The operation methods other than the descriptions of specifications, precautions and user's manuals may not activate functions as expected. Furthermore, they may lead to unexpected breakdowns/failures and cause factors of accidents by the breakdowns and failures.
- Conduct a user test to confirm that all safety equipment operates correctly before system operation. Otherwise, safety functions may malfunction and you may suffer serious injury.
- Enable the security function of the EtherCAT master so that the PDO mapping assignment is not changed.
- Use Operation Authority Verification function in the NJ/NX/NY-series CPU Unit to enable the security function. Set authorities so that synchronization of the transfer function cannot be operated. As for the details, refer to the *Sysmac Studio Version 1 Operation Manual* (Cat. No. W504).
- Set interval 1 seconds or more until you turn the control power supply to the Servo Drive ON again after the power supply OFF.
- When you use STO function for a vertical axis, in some cases, the power supply of a Servomotor becomes OFF before the brake is held. As a result, a workpiece may fall. Take a caution of the timing when the brake is held. Refer to *7-6 Brake Interlock* on page 7-22 for details.

8-1-10 Procedure for Reset of Safety Error

This section describes a procedure for error reset other than “Cycle Power Supply” in failures of safety functions.

1 Refer to *Section 12 Troubleshooting* based on error No. and error code and take appropriate measures.

2 Set **error acknowledge** from *0* to *1* in the safety PDO of a safety controller and check *0* (No error) on **error acknowledge (Status)**.

3 Execute Fault reset of the **Controlword** in the PDO of a standard controller or execute **Sysmac Error - Sysmac Error Status Clear** (2002-02 hex).

The following chart shows error reset by Fault reset.

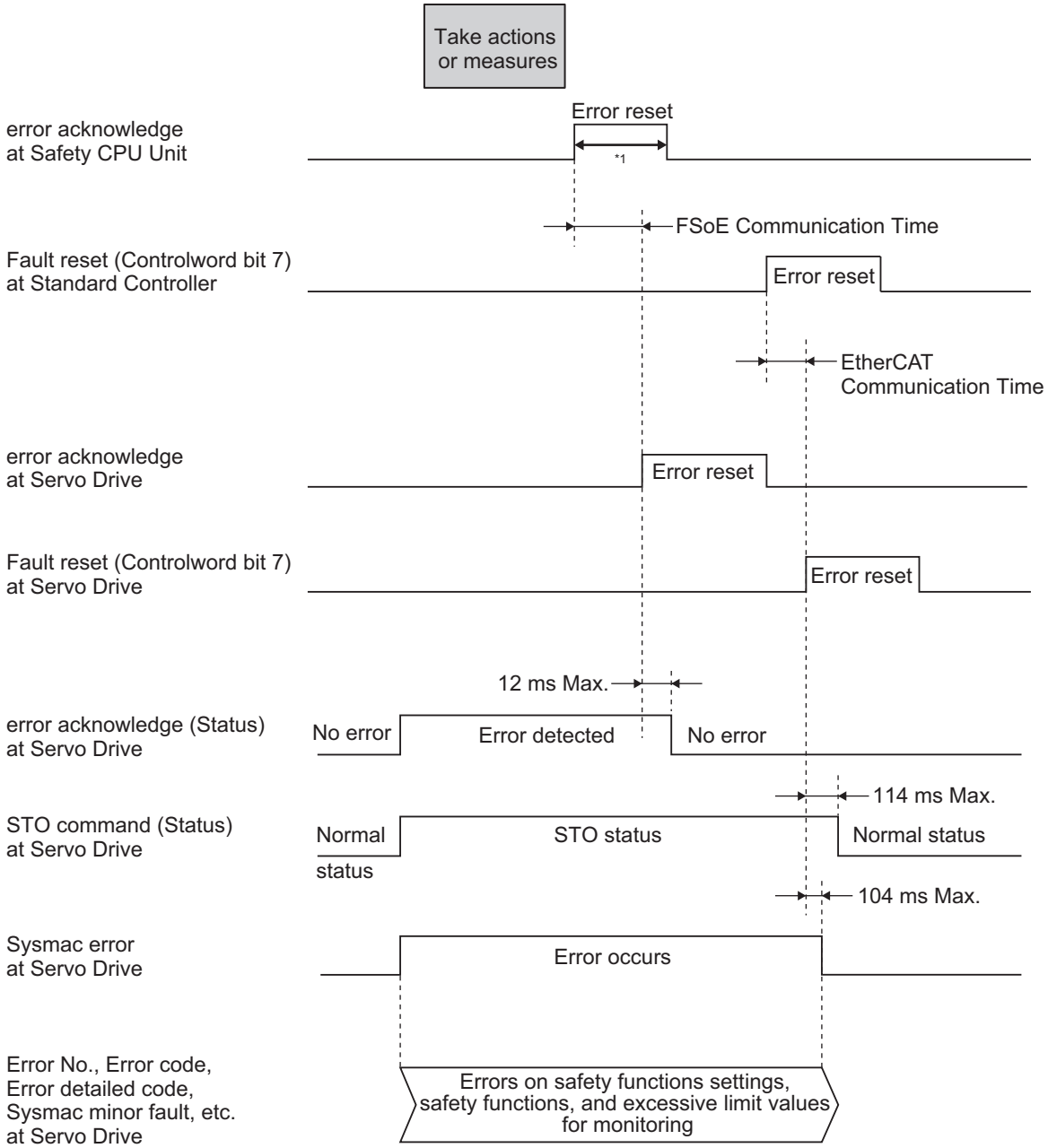

*1. Keep the same time or longer of FSoE Watchdog Timer setting.

8-1-11 Safety Program

This is an example to reset the safety errors of the Servo Drive via the safety CPU unit. Set safety process data communications to 1S-series Servo Drives Advance Type to use function block by Sysmac Studio.

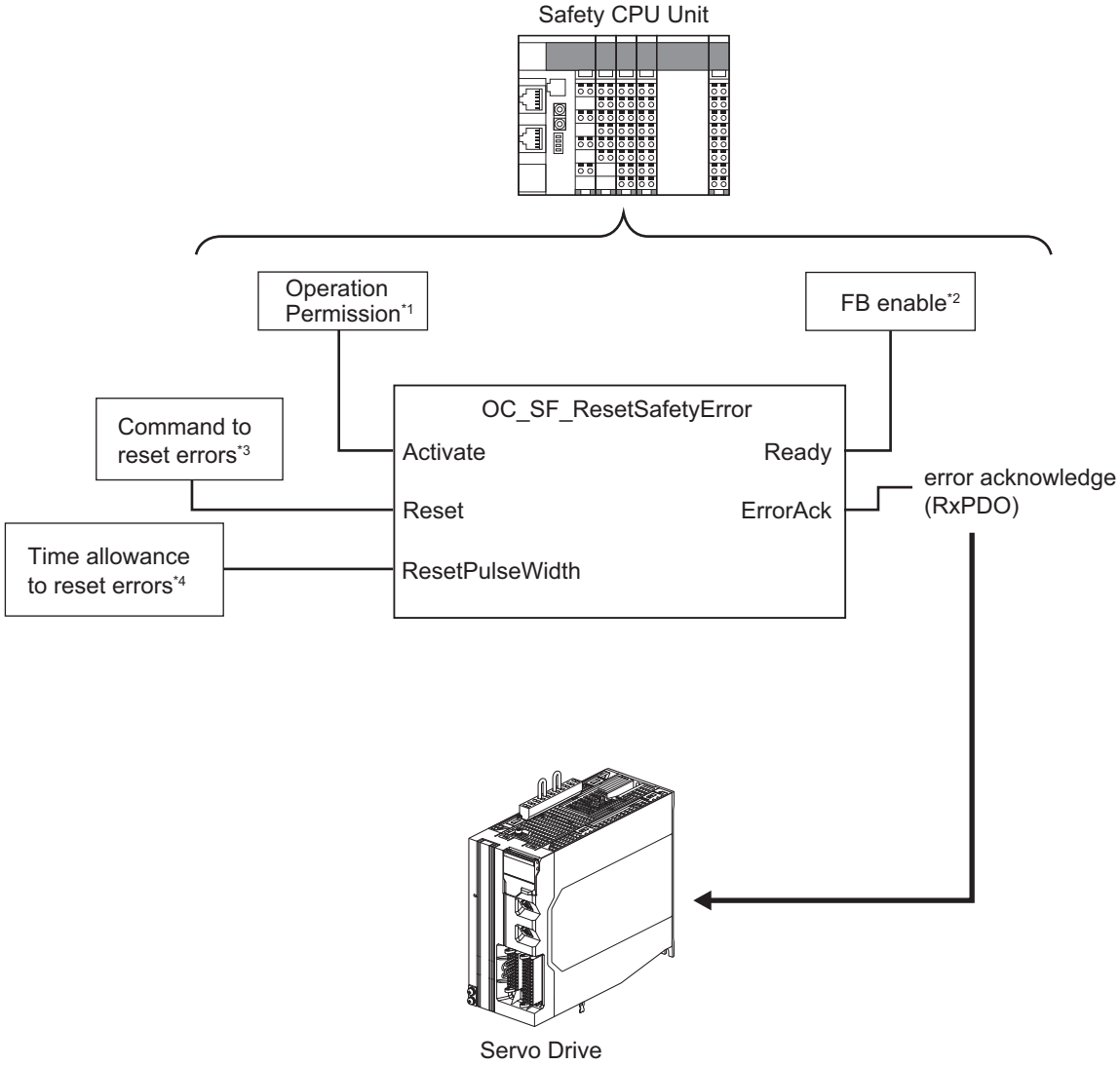

*1. Input the condition retained by the safety controller, such as safety connection status, to control the function blocks according to the system and programs.

*2. FB Enable means that function blocks are operable. You can input other function blocks and programs.

*3. Input a command to reset the safety error.

*4. Set “ON” time allowance to reset the safety errors. 100 ms or longer time allowance is required.

For further information about function block “OC_SF_ResetSafetyError”, refer to *A-5-3 Function block for 1S-series Servo Drives Advance Type* on page A-229.

8-2 Safe Torque OFF (STO) Function

This function is used to cut off motor's currents by commands from a safety controller and stop the motor.

When the STO function is activated, a Servo Drive turns OFF the Servo Ready Output (READY) and enters the safe state.

Servo Drives have the following two types of STO functions. Use either or both functions according to your safety device configuration.

- STO function via safety input signals
- STO function via EtherCAT communications

While the STO function is activated via EtherCAT communications, Safe Brake Control (SBC) function can be used. As for Safe Brake Control (SBC) function, refer to *8-9 Safe Brake Control (SBC) Function* on page 8-112.

Precautions for Correct Use

When you use just STO function via safety input signals, the STO function cannot be used with Safe Brake Control (SBC).

8-2-1 STO Function via Safety Input Signals

This section explains how to use the STO function via safety input signals.

Specification of Safety I/O Signals

The following I/O signals are available to use the STO function: the safety input signals (SF1 and SF2) and the external device monitoring (EDM) output signal.

Refer to *3-1-11 Safety Signal Connector (CN14) Specifications* on page 3-20 for safety signal connection and external signal processing.

● Safety Input Signals

Two safety input circuits are installed to operate the STO function.

Signal	Symbol	Pin No.	Description
Safety input 1	SF1+	3,14	Input 1 and Input 2 that activate STO function. These inputs cut off drive signal of the power transistor inside the Servo Drive
	SF1-	4,15	
Safety input 2	SF2+	5,16	
	SF2-	6,17	

- When safety input 1 or 2 turns OFF, the STO function will start operating within 7 ms after the input, and the motor output torque will be cut off.
- Connect the equipment so that the safety input circuit turns OFF when the STO function is activated.
- Set the operation when the safety input turns OFF in the **Stop Selection** – **Shutdown Option Code** (3B20-01 hex).

Precautions for Correct Use

L pulses for self-diagnosis of safety equipment

When you connect a safety device, such as a safety controller or a safety sensor, the safety output signal of the device may include L pulses for self-diagnosis. To avoid malfunction due to the L pulses for self-diagnosis, a filter that removes the L pulses is built into the safety input circuit. If the OFF time of the safety input signal is 640 µs or less, the safety input circuit does not recognize it as OFF. To make sure that OFF is recognized, maintain the OFF status of safety input signal for at least 5 ms.

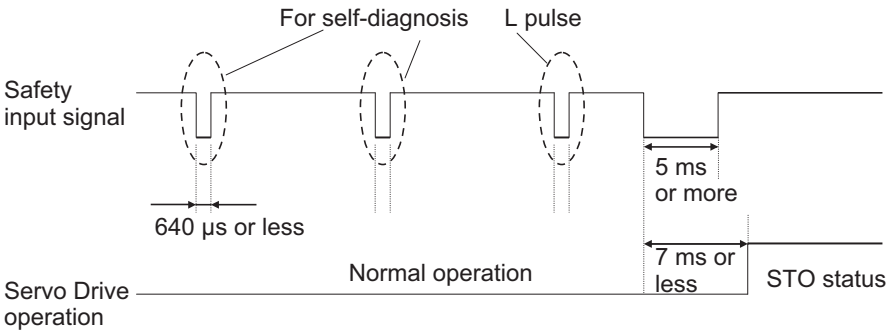

Safety input has diagnosis function, which can detect wiring errors like incorrect wiring. When the wiring error is detected in safety input, Discrepancy Error at SF Input (Error No. 71.04) occurs.

The wiring errors are the followings:

Wiring error	Timing of detection
Contact to power supply line (+)	Detect when safety input is OFF.
Ground fault	Detect when safety input is ON.
Open circuit	Detect when safety input is ON.

External Device Monitoring (EDM) Output Signal

This is a monitor output signal that is used to monitor the status of safety input signals from an external device.

Connect the EDM output signal to the external device monitoring terminal on a safety device, such as a safety controller or a safety sensor.

For the safety controller, such as G9SP series, has a function to detect wiring errors, this EDM function is not required.

Signal	Symbol	Pin No.	Description
EDM output	EDM+P	1	A monitor signal is output to detect a safety function failure. This is not a safety output.
	EDM+	2	
	EDM-	12	

Relationship between Safety Input Signals and EDM Output Signal

Normally when both safety inputs 1 and 2 are OFF, the EDM output circuit signal is ON. When both safety inputs 1 and 2 are OFF, this means the STO function is active in both 1 and 2 safety input circuits.

You can detect a failure of the safety input circuit and the EDM output circuit by monitoring all of the following 4 signal status from an external device.

These are the two cases of errors:

- Both safety inputs 1 and 2 are OFF, but the EDM output circuit signal does not turn ON.
- Either or both safety inputs 1 and 2 are ON, but the EDM output circuit signal is ON.

Signal	Symbol	Signal status			
Safety input 1	SF1	ON	ON	OFF	OFF
Safety input 2	SF2	ON	OFF	ON	OFF
EDM output	EDM	OFF	OFF*1	OFF*1	ON*2

*1. After either safety input 1 or 2 is continuously ON for 200 ms, Discrepancy Error at SF Input (Error No. 71.04) occurs and EDM output is turned ON.

*2. During Unit Restart, the EDM output will be turned OFF.

The maximum delay time is 7 ms after the safety input signal is input until the EDM output signal is output.

Relationship Safety Function via FSoE and EDM Output Signals

When a servo drive goes into the STO status by safety functions via FSoE communication, EDM output is turned ON.

Relationship between EtherCAT and EDM Output Signal

When a 1S-series Servo Drive is not connected to the EtherCAT network, its safe state is held by the STO function. The EDM signal is ON while in this state.

Precautions for Correct Use

Start the applications of the safety controller after the Servo Drive established EtherCAT communications. If this condition is not met, an EDM error may be detected.

EDM Output Signal and Errors Occurrence

When an error leading to STO occurs, EDM Output turns ON.

Errors leading to STO are as follows:

Error No.		Error name
Main (hex)	Sub (hex)	
21	04	Encoder Error
21	05	Encoder power supply Error
35	07	Encoder Self-diagnosis Error
70	00	Safety Parameter Error
70	01	Safety Communications Setting Error
70	02	FSoE Slave Address Error
70	03	Safety Frame Error
70	04	Safety Communications Timeout
71	00	Safety Function Setting Error
71	01	SOPT Input Monitoring Error
71	02	Safety Function Error
71	03	Monitoring Limit Exceedance Error
71	04	Discrepancy Error at SF Input
71	05	SBC Relay Diagnosis Error
71	06	External Test Signal Failure at SOPT Input
71	07	Overload Detected at Test Output
71	08	Stuck-at-high Detected at Test Output
71	09	Overload Detected at SBC Output
71	10	Stuck-at-high Detected at SBC Output
71	11	IOV Power Supply Voltage Error
71	12	SBC Power Supply Voltage Error
71	13	Internal Circuit Error at SF Input
71	14	Internal Circuit Error at SOPT Input
71	15	Internal Circuit Error at Test Output
71	16	Internal Circuit Error at SBC Output

Operation Example

This section gives the timing charts to show the operation timing to a safe state as well as the timing of return from safe state.

● Operation Timing to Safe State

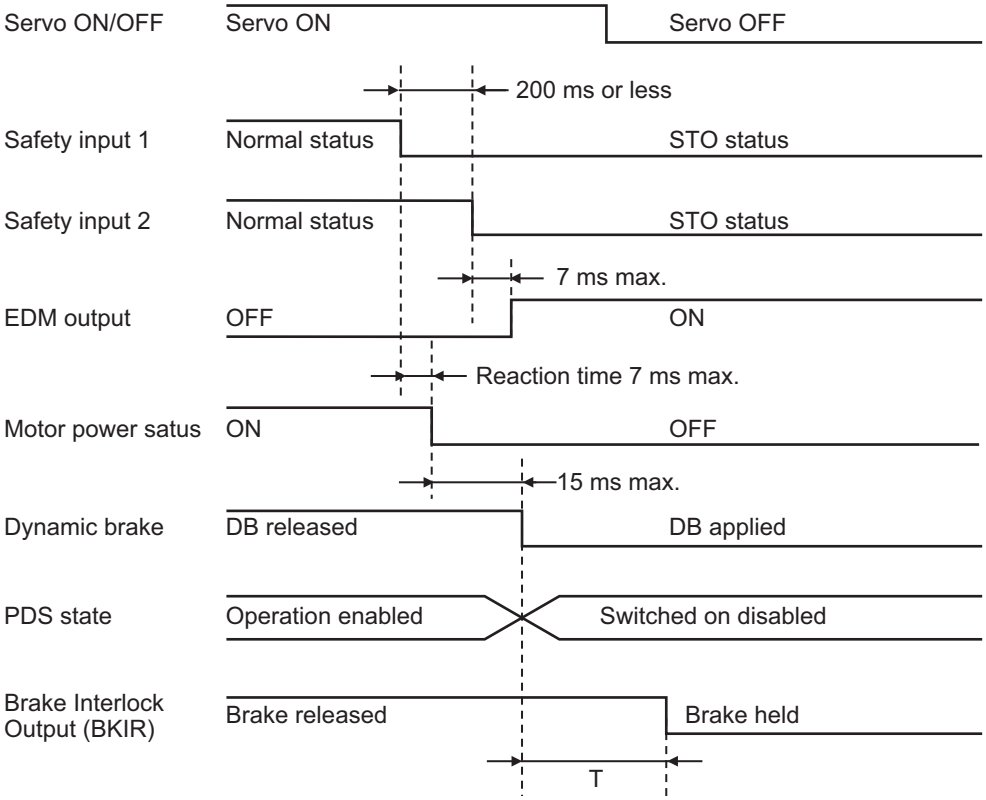

T is determined by a set value of the following objects, whichever comes earlier.
4610-02 hex : **Brake Interlock Output** – **Timeout at Servo OFF**
4610-03 hex : **Brake Interlock Output** – **Threshold Speed at Servo OFF**

When there is discrepancy between Safety input 1 and Safety input 2 for 200 ms or longer, Discrepancy Error at SF Input (Error No. 71.04) occurs.

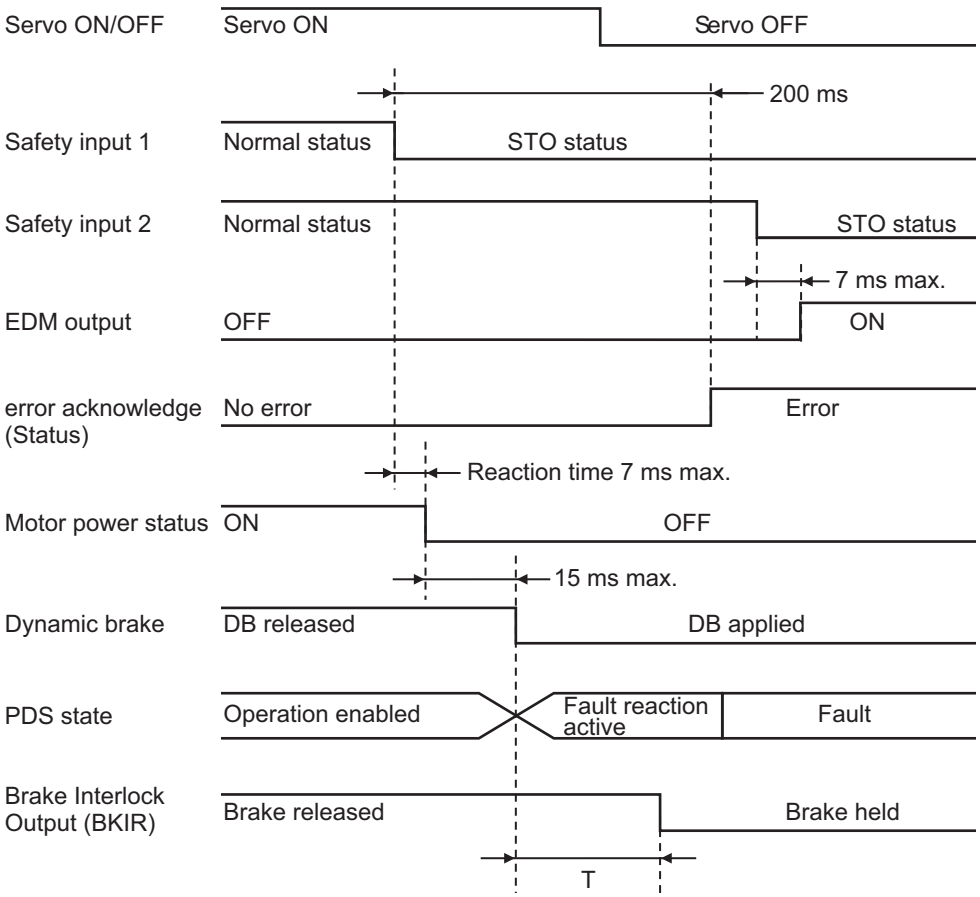

T is determined by a set value of the following objects, whichever comes earlier.
4610-02 hex : **Brake Interlock Output** – **Timeout at Servo OFF**
4610-03 hex : **Brake Interlock Output** – **Threshold Speed at Servo OFF**

The dynamic brake operates according to the setting of the **Stop Selection** – **Shutdown Option Code** (3B20-01 hex).

Recovery Timing from Safe State

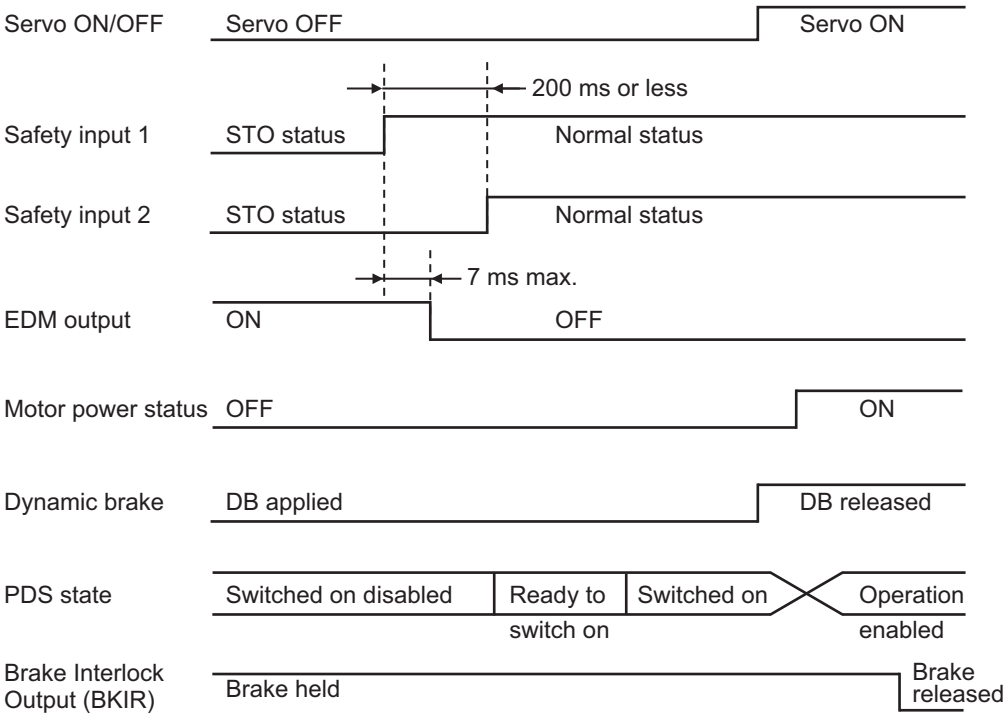

Precautions for Correct Use

- Design programs for the safety controller so that the STO function is not canceled automatically even when the emergency stop switch is released.
- Design programs for the safety controller so that the STO function is not canceled automatically when a Servo Drive failure is detected through the EDM output.

Connection Example

The following connection examples show how to connect the safety inputs and the EDM output to the safety controller.

● Connection with a Safety Controller

Connect a safety controller and safety inputs to a Servo Drive as the following diagram. For the safety controller, such as G9SP series, has a function to detect wiring errors, this EDM function is not required.

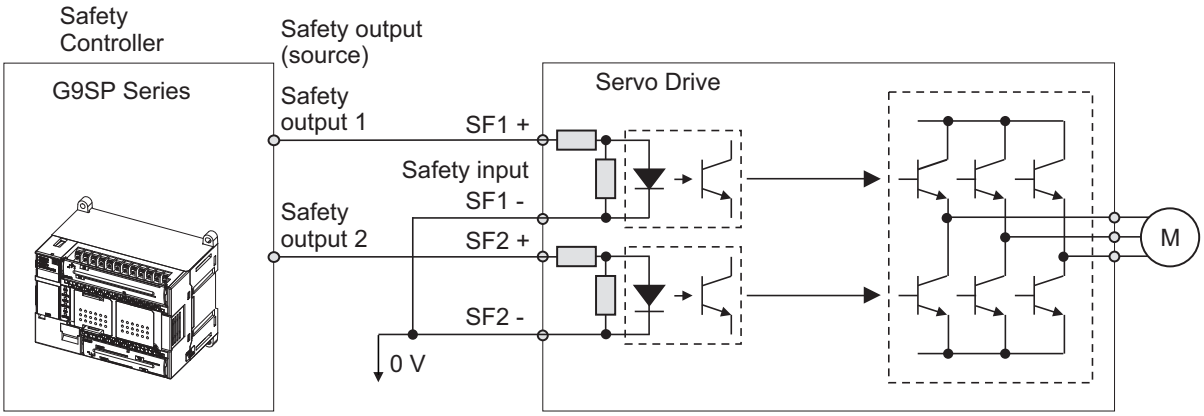

Wire SF1 and SF2 to different safety outputs.

✕ Wiring SF1 and SF2 to the same safety output

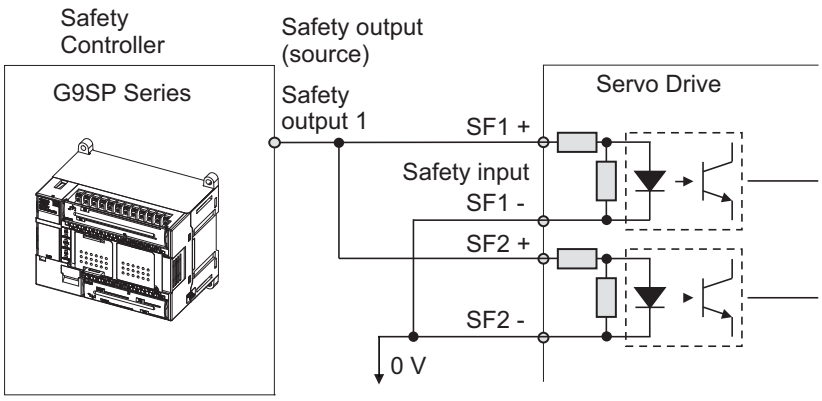

When EDM output is used with the same way of connection to existing Servo Drive, connect to a safety controller as the following diagram.

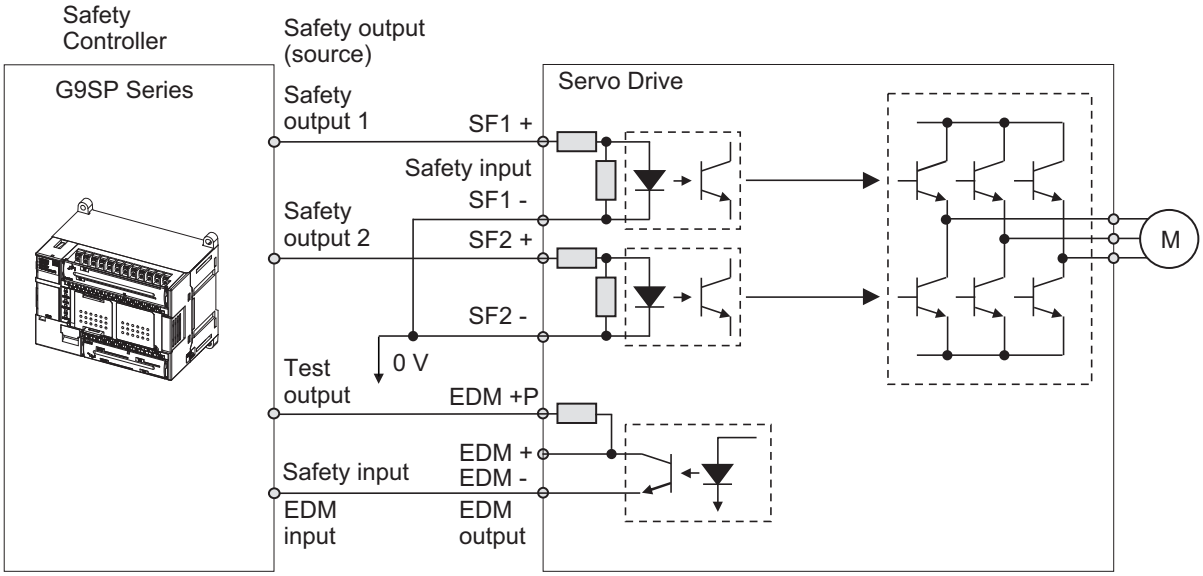

● Connection with a Safety Controller (Multiple Servo Drives)

This example shows how to connect multiple Servo Drives.

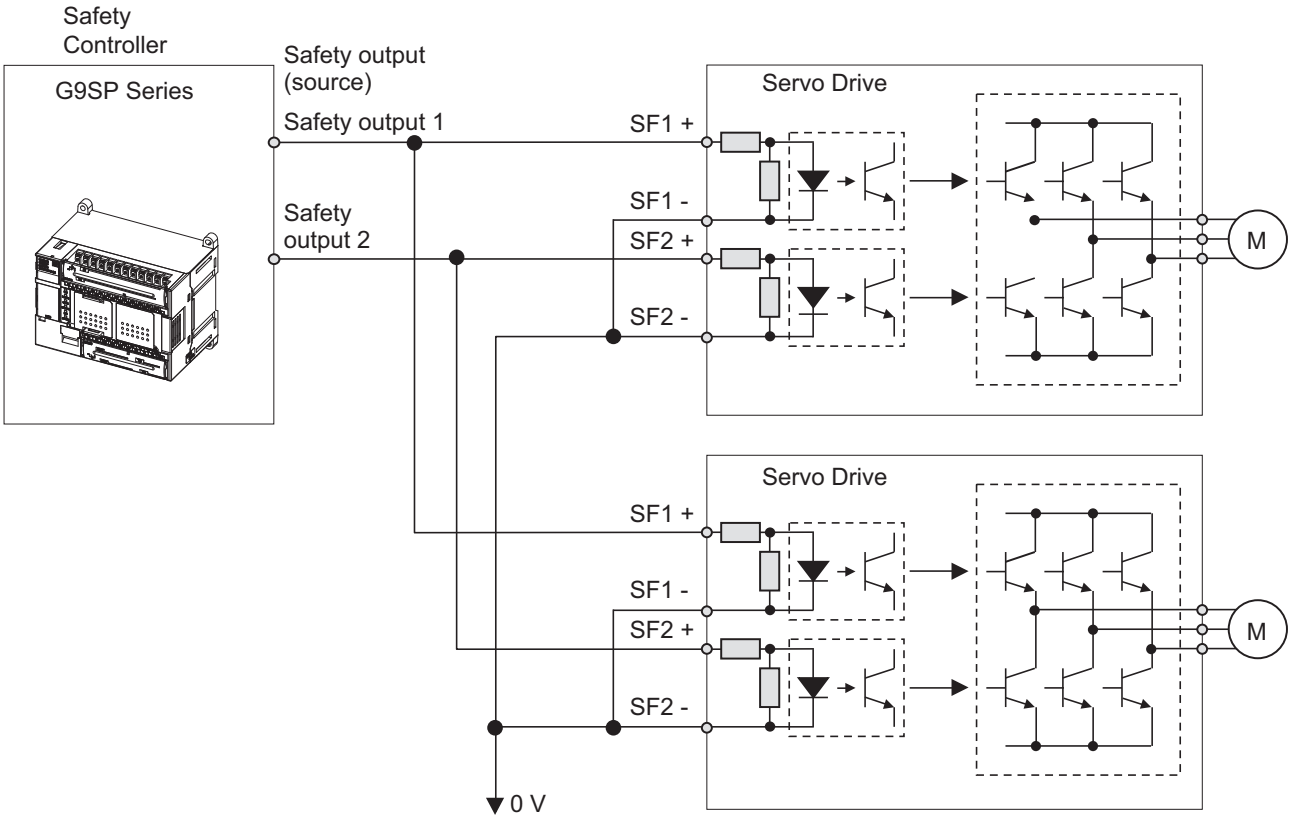

When EDM output is used with the same way of connection to existing servo drive, connect the EDM signal to the terminal EDM + P on the first Unit, and to the terminal EDM + on a Unit from the second as shown in the following diagram.

When a G9SP-series safety controller is used, you can connect up to four 1S-series Servo Drives Advance Type.

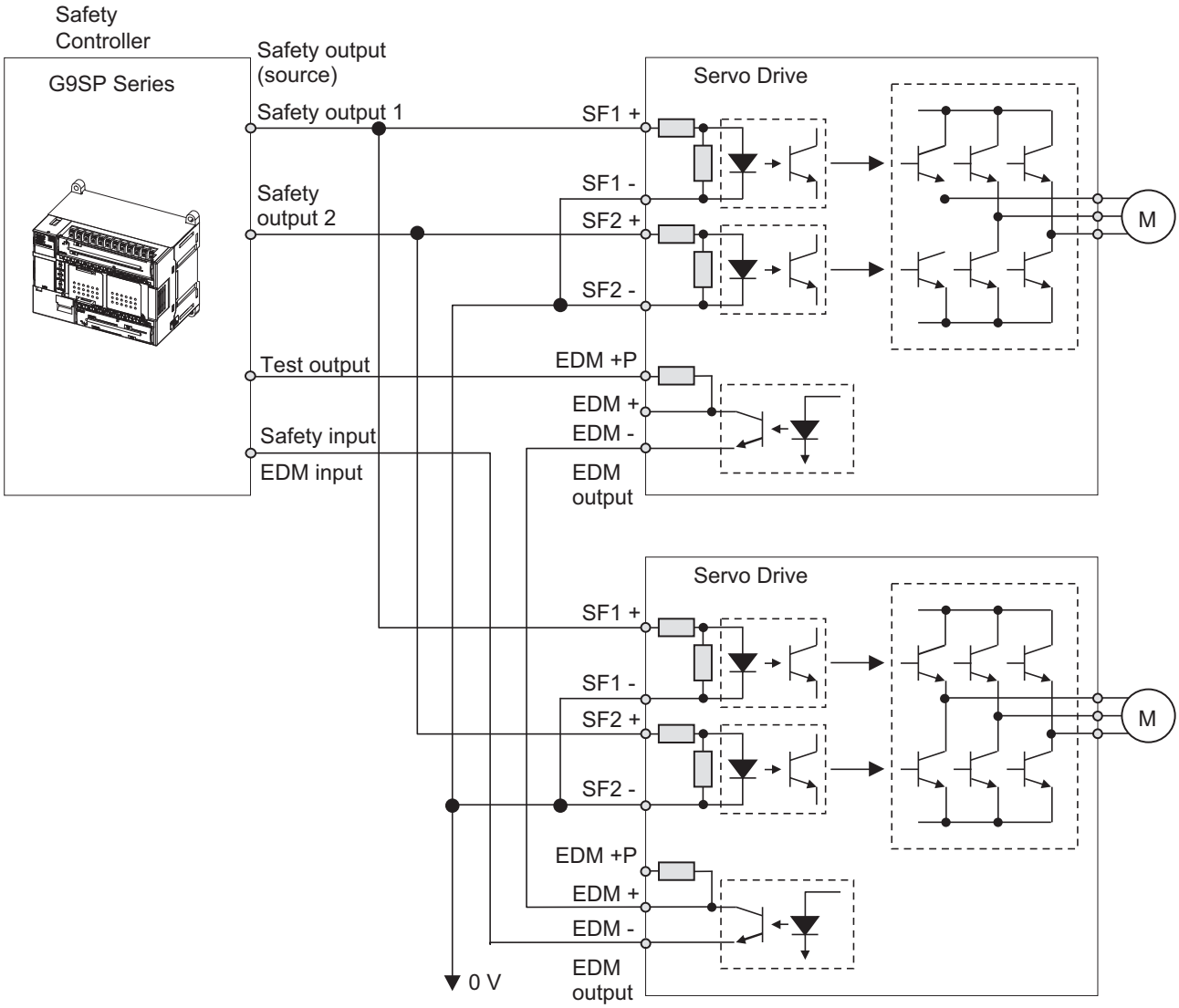

Programming Example

This is a programming example in which the STO function of the 1S-series Servo Drives Advance Type is operated from the Safety Controller.

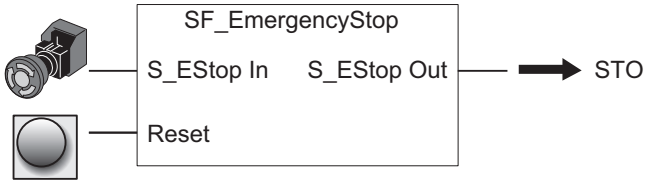

Precautions for Correct Use

- Design programs for the safety controller so that the STO function is not canceled automatically even when the emergency stop switch is released.
- Design programs for the safety controller so that the STO function is not canceled automatically when a Servo Drive failure is detected through the EDM output.

8-2-2 STO Function via EtherCAT Communications

This section explains how to use the STO function via EtherCAT communications.

Object Required for Settings

Index (hex)	Subindex (hex)	Name	Description		Reference
6640	00	STO command	Gives the STO status and issues the STO command.		P. A-62
			Read	Gives the STO status. 0: Normal status 1: STO status	
			Write	Issues the STO command. 0: Activate STO 1: Reset STO	

Operation Procedure

This section describes how to use the STO function.

1 Assign **STO command** to PDO.

STO command is assigned to PDO. Use **STO command** as it is.

As for the details, refer to *Setting of Fixed Safety PDO* on page 8-8.

2 Activate STO function.

STO function is activated after making **STO command** assigned to PDO *0* (Activate STO) from a safety controller.

Operation Timing

Operation Timing to Safe State

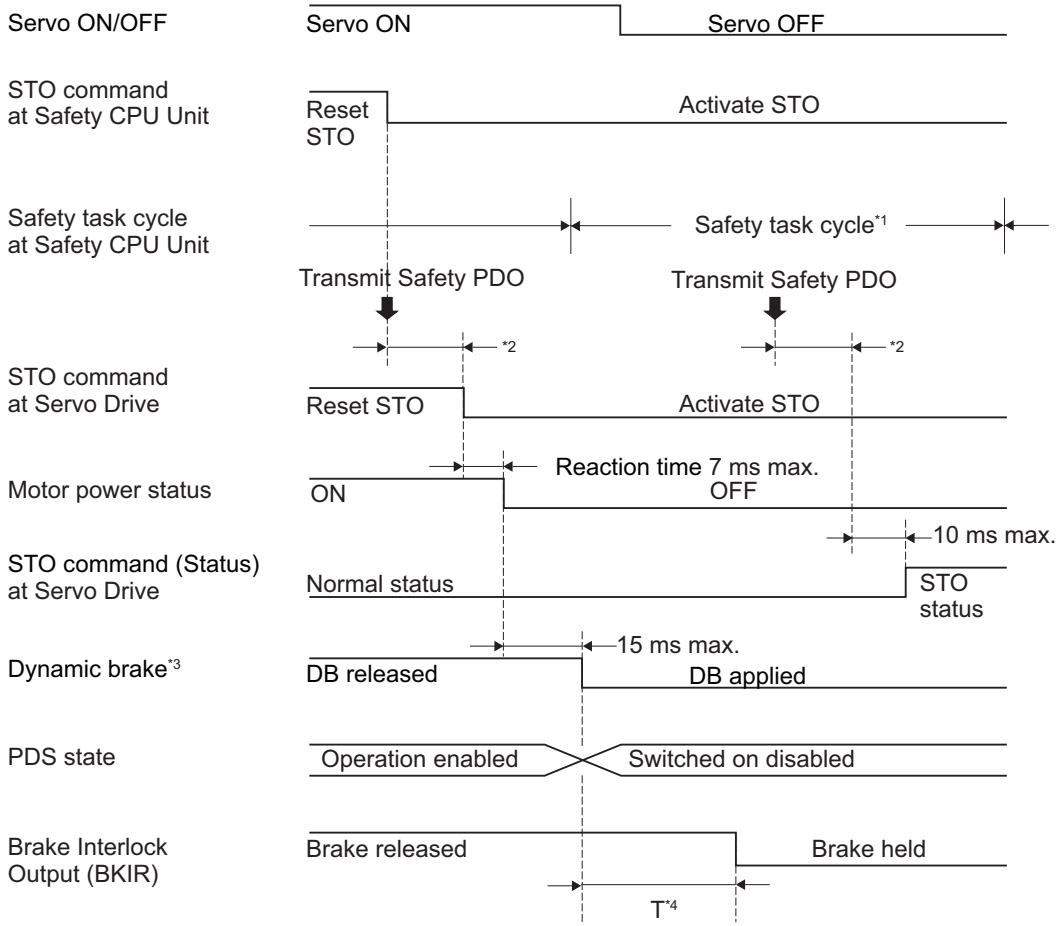

*1. As for safety task cycle, refer to *NX-series Safety Control Units User's Manual* (Cat. No. Z930).

*2. FSoE Communication Time.

*3. Follow the setting of **Stop Selection - Shutdown Option Code** (3B20-01hex).

*4. Follow the earlier setting time below.
Brake Interlock Output - Threshold Speed at Servo OFF (4610-03hex)
Brake Interlock Output - Timeout at Servo OFF (4610-02hex)

● Recovery Timing from Safe State

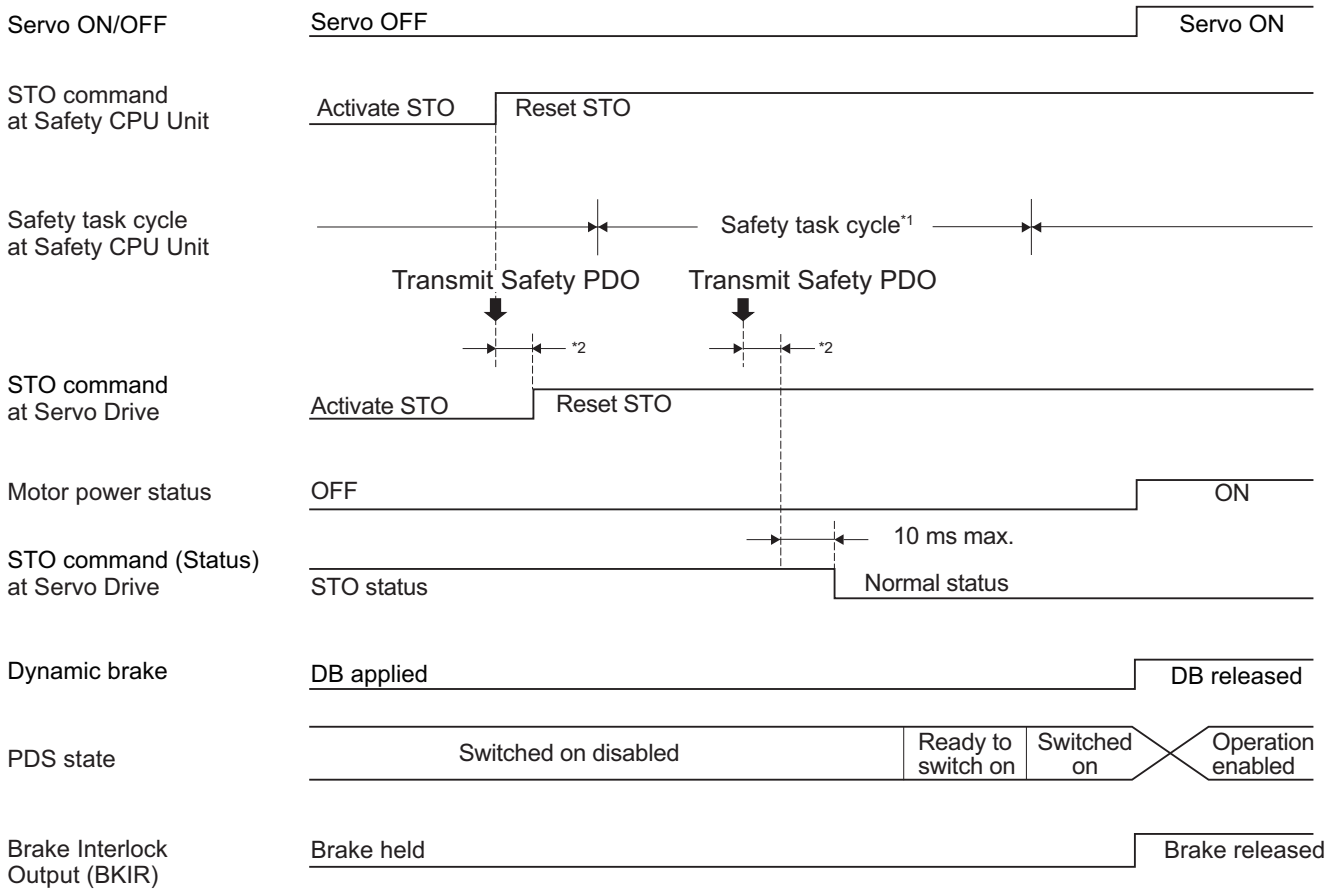

*1. As for safety task cycle, refer to *NX-series Safety Control Units User's Manual* (Cat. No. Z930).

*2. FSoE Communication Time.

The STO is also activated if a hardware failure is detected during the self diagnosis. In this case, the STO remains active until the power is turned OFF.

Precautions for Correct Use

Design programs for the safety controller so that the STO function is not canceled automatically even when the emergency stop switch is released.

Programming Example

This is a programming example in which the STO function of the 1S-series Servo Drives Advance Type is operated from the Safety CPU Unit.

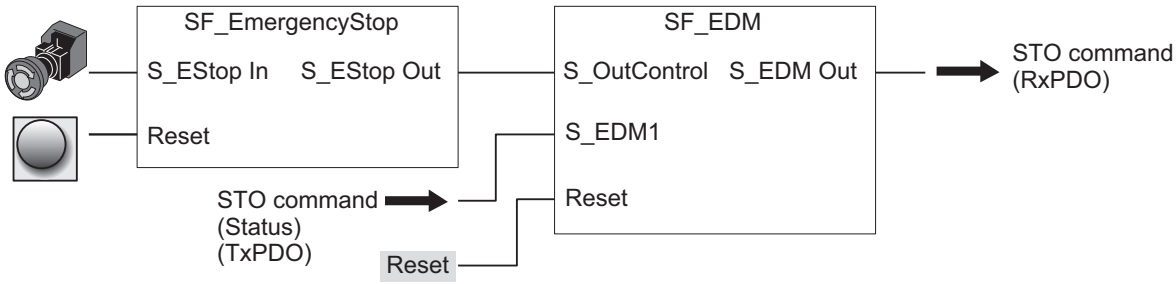

Precautions for Correct Use

Design programs for the safety controller so that the STO function is not canceled automatically even when the emergency stop switch is released.

8-2-3 STO with SBC Functions via EtherCAT Communications

While the STO function is activated via EtherCAT communications, Safe Brake Control (SBC) function can be used.

When concurrent use of SBC and STO functions is set, SBC function is activated in the following cases.

- STO function is used via safety input signals.
- Servo Drive goes into the STO status when using SS1 function.
- Servo Drive goes into the STO status when an error is detected by safety function.

Object Requiring Settings

Index (hex)	Subindex (hex)	Name	Description	Reference
6643	---	STO activate SBC	It is a setting to activate SBC function while STO is activated.	P. A-63
	01	STO activate SBC 1	Sets SBC command to be activated to STO command. 0000 0000 hex: Not activate SBC command 6660 0101 hex: Activate SBC command 1	

Operation Procedure

This section describes how to use the STO function with SBC function.

1 Carry out brake wiring.

As for brake wiring, refer to *8-9 Safe Brake Control (SBC) Function* on page 8-112.

2 Set the parameters.

Set SBC command to instances for **STO activate SBC - STO activate SBC 1** (6643-01 hex).

When you connect a brake via safety relay, set parameters **Safety Relay Activate** (4F08-00 hex), etc. As for the detail, refer to *8-9 Safe Brake Control (SBC) Function* on page 8-112.

3 Use STO function.

Once a Servo Drive goes into the STO status, it activates SBC function at the same time.

Operation Timing

When you make STO command assigned to safety process data *0* (Activate STO), STO function is activated with SBC function at the same time.

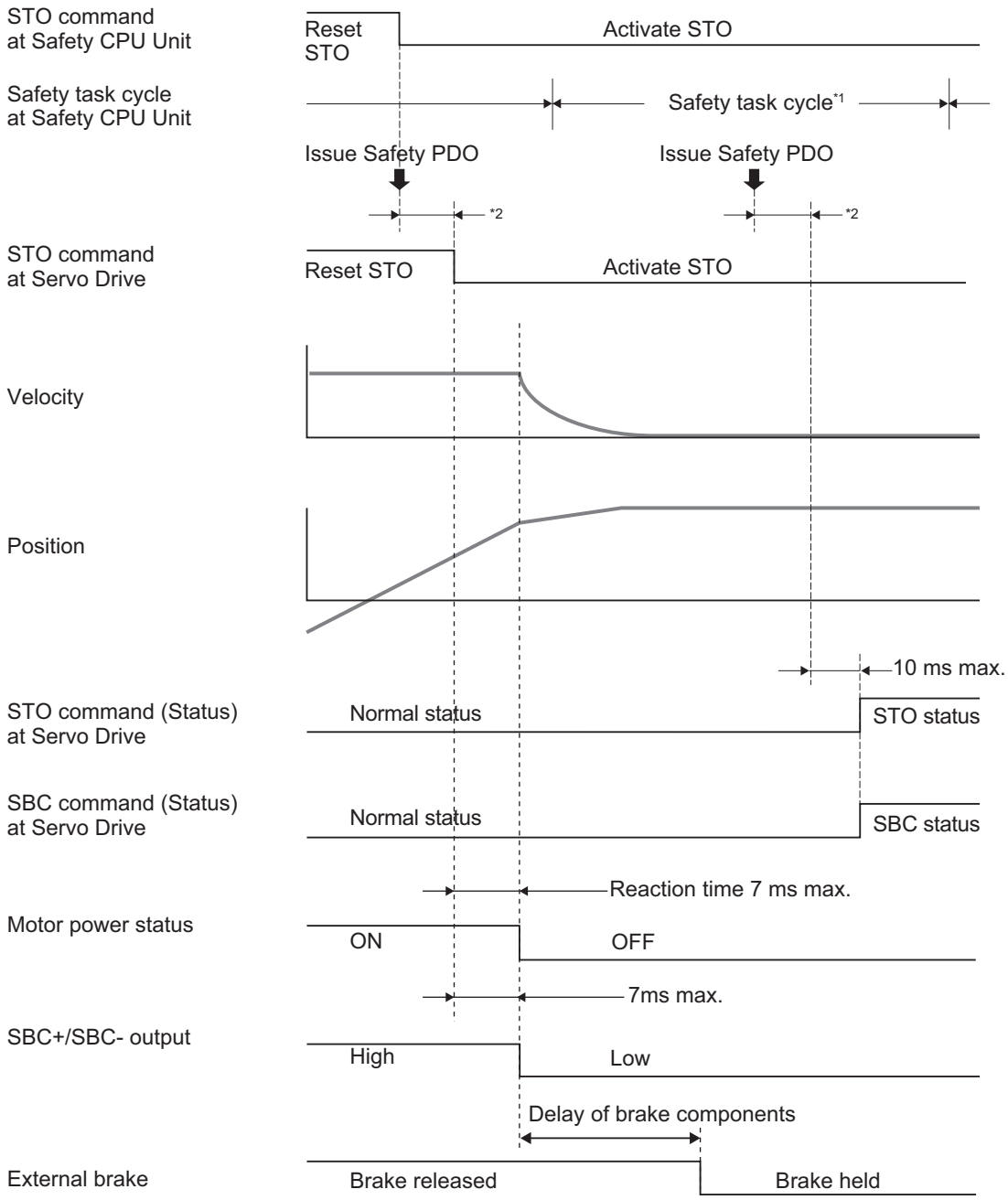

*1. As for safety task cycle, refer to *NX-series Safety Control Units User's Manual* (Cat. No. Z930).

*2. FSoE Communication Time.

Once STO function is deactivated, SBC function is deactivated, too.

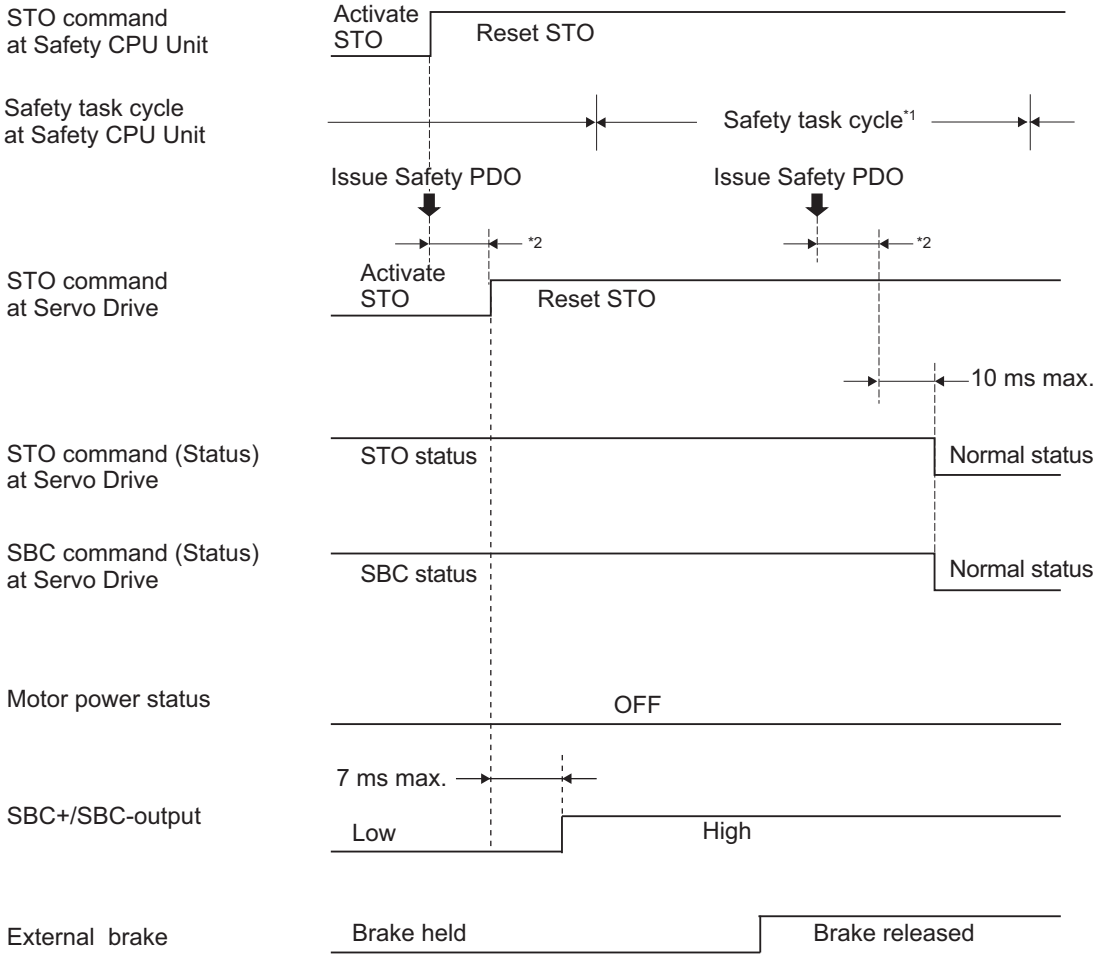

*1. As for safety task cycle, refer to *NX-series Safety Control Units User's Manual* (Cat. No. Z930).

*2. FSoE Communication Time.

8-3 Safe Stop 1 (SS1) Function

This function is used to stop a motor by activating STO function at any timing after receiving a command from a safety controller. It receives the command from the safety controller via EtherCAT (FSoE) communications.

Set timing to activate STO function with the two following ways.

(a) To activate STO after the delay time passed.

Set the time length, from receiving SS1 Command Activate signal to running STO, to SS1 time to STO. Refer to *8-1-6 Data Necessary for Designing Programs of Each Controller* on page 8-12 to set SS1 time to STO.

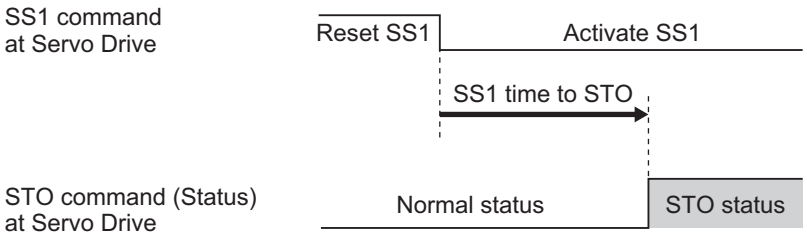

(b) Before the delay time passed, to activate STO at the same time when the motor stopped.

In addition to (a), when the motor is controlled to stop before the SS1 time to STO passed, STO starts at the same time when the motor stopped. In this case, the motor velocity should be within the range of the SS1 velocity zero window. Set the appropriate SS1 time for velocity zero.

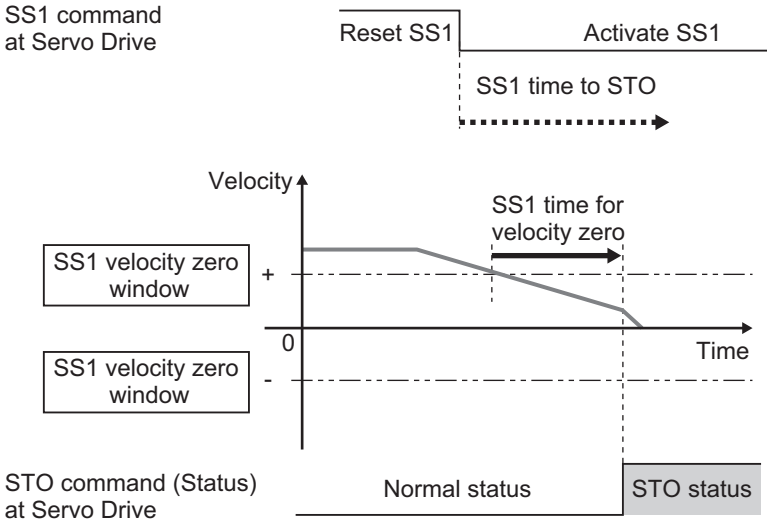

STO is activated when either condition of the **SS1 time to STO** or the **SS1 time for velocity zero** is met earlier.

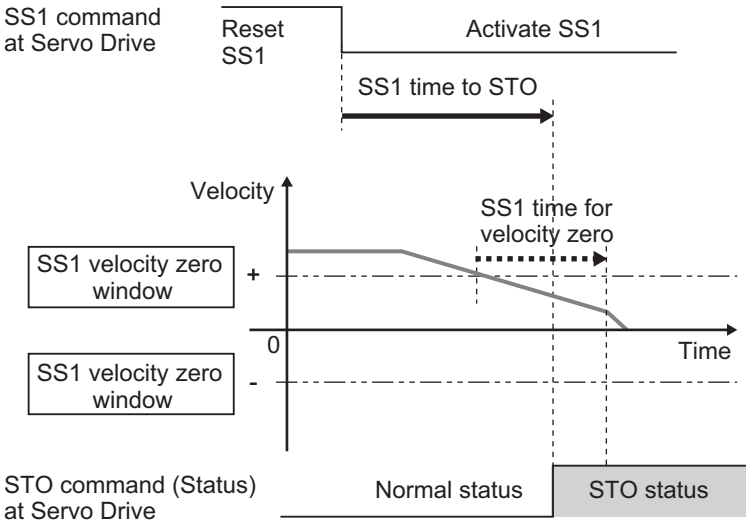

Safe brake control (SBC) function can be activated after STO function is activated when a motor and a device are fixed. Refer to *8-3-5 Concurrent Use of SS1 Function and SBC Function* on page 8-48 for details.

Precautions for Correct Use

- Set times so that **SS1 time for velocity zero** is less than or equal to **SS1 time to STO**.
- Set times so that **SS1 time for velocity zero** is equal to **SS1 time to STO** when activating STO function with only way (a).

8-3-1 Objects Requiring Settings

Index (hex)	Subindex (hex)	Name	Description		Reference
6650	–	SS1 command	Gives SS1 function status and issues SS1 command.		P. A-63
	01	SS1 command 1	Gives SS1 instance 1 state and issues SS1 command.		
			Read	Gives SS1 status. 0: Normal status 1: SS1 status	
			Write	Issues SS1 command. 0: Activate SS1 1: Reset SS1	
	02	SS1 command 2	The function is the same as 01 hex.		
	03	SS1 command 3	The function is the same as 01 hex.		
	04	SS1 command 4	The function is the same as 01 hex.		
	05	SS1 command 5	The function is the same as 01 hex.		
	06	SS1 command 6	The function is the same as 01 hex.		
	07	SS1 command 7	The function is the same as 01 hex.		
	08	SS1 command 8	The function is the same as 01 hex.		
6651	–	SS1 time to STO	Sets a time until it activates STO function after receiving SS1 command. Sets the time for each SS1 command.		P. A-64
	01	SS1 time to STO 1	Sets a time until it activates STO function after receiving SS1 command 1.		
	02	SS1 time to STO 2	The function is the same as 01 hex.		
	03	SS1 time to STO 3	The function is the same as 01 hex.		
	04	SS1 time to STO 4	The function is the same as 01 hex.		
	05	SS1 time to STO 5	The function is the same as 01 hex.		
	06	SS1 time to STO 6	The function is the same as 01 hex.		
	07	SS1 time to STO 7	The function is the same as 01 hex.		
	08	SS1 time to STO 8	The function is the same as 01 hex.		
6653	–	SS1 velocity zero window	It is a setting to activate SS1 function with motor's velocity. Sets a limit for velocity to detect that a motor stops. Sets the limit for each SS1 command.		P. A-64
	01	SS1 velocity zero window 1	Sets a limit for velocity to detect that a motor stops after receiving SS1 command 1.		
	02	SS1 velocity zero window 2	The function is the same as 01 hex.		
	03	SS1 velocity zero window 3	The function is the same as 01 hex.		
	04	SS1 velocity zero window 4	The function is the same as 01 hex.		
	05	SS1 velocity zero window 5	The function is the same as 01 hex.		
	06	SS1 velocity zero window 6	The function is the same as 01 hex.		
	07	SS1 velocity zero window 7	The function is the same as 01 hex.		
	08	SS1 velocity zero window 8	The function is the same as 01 hex.		

Index (hex)	Subindex (hex)	Name	Description	Reference
6654	–	SS1 time for velocity zero	It is a setting to activate SS1 function with motor's velocity. Sets a time for monitoring to detect that a motor stops. STO function is activated after SS1 time for velocity zero passed when the motor's velocity continuously fulfills one within SS1 velocity zero window. Sets the time for each SS1 command.	P. A-65
	01	SS1 time for velocity zero 1	Sets a time to determine that a motor stops after receiving SS1 command 1.	
	02	SS1 time for velocity zero 2	The function is the same as 01 hex.	
	03	SS1 time for velocity zero 3	The function is the same as 01 hex.	
	04	SS1 time for velocity zero 4	The function is the same as 01 hex.	
	05	SS1 time for velocity zero 5	The function is the same as 01 hex.	
	06	SS1 time for velocity zero 6	The function is the same as 01 hex.	
	07	SS1 time for velocity zero 7	The function is the same as 01 hex.	
	08	SS1 time for velocity zero 8	The function is the same as 01 hex.	

Precautions for Correct Use

- Use even numbers when you set values for **SS1 time to STO - SS1 time to STO 1** to **SS1 time to STO 8** (6651-01 hex to 08 hex). The value +1 activates STO function when using uneven numbers.
- Use even numbers when you set values for **SS1 time for velocity zero - SS1 time for velocity zero 1** to **SS1 time for velocity zero 8** (6654-01 hex to 08 hex). The value +1 activates STO function when using uneven numbers.

8-3-2 Operation Procedure

This section describes how to use the SS1 function.

1 Assign SS1 function to PDO.

SS1 function was already assigned when only **SS1 command 1** is used.

Assign an instance to be used from **SS1 command 2** to **SS1 command 8** (6650-02 hex to 08 hex) when other **SS1 command** is used.

Refer to *Setting of Fixed Safety PDO* on page 8-8 for details.

2 Set parameters.

- Set a timing to activate STO function into instances from **SS1 time to STO - SS1 time to STO 1** to **SS1 time to STO 8** (6651-01 hex to 08 hex).
- Set a velocity limit to detect motor's stop to instances from **SS1 velocity zero window - SS1 velocity zero window 1** to **SS1 velocity zero window 8** (6653-01 hex to 08 hex).
- Set a monitoring time to determine motor's stop into instances from **SS1 time for velocity zero - SS1 time for velocity zero 1** to **SS1 time for velocity zero 8** (6654-01 hex to 08 hex).

3 Enable SS1 function.

STO function is activated at the set timing when **SS1 command** assigned to safety PDO mapping is set to *0* (Activate SS1) from a safety controller.

8-3-3 Operation Timing

This section describes operation timing for SS1 function.

Operation Timing in Start

(a) To activate STO after the delay time passed.

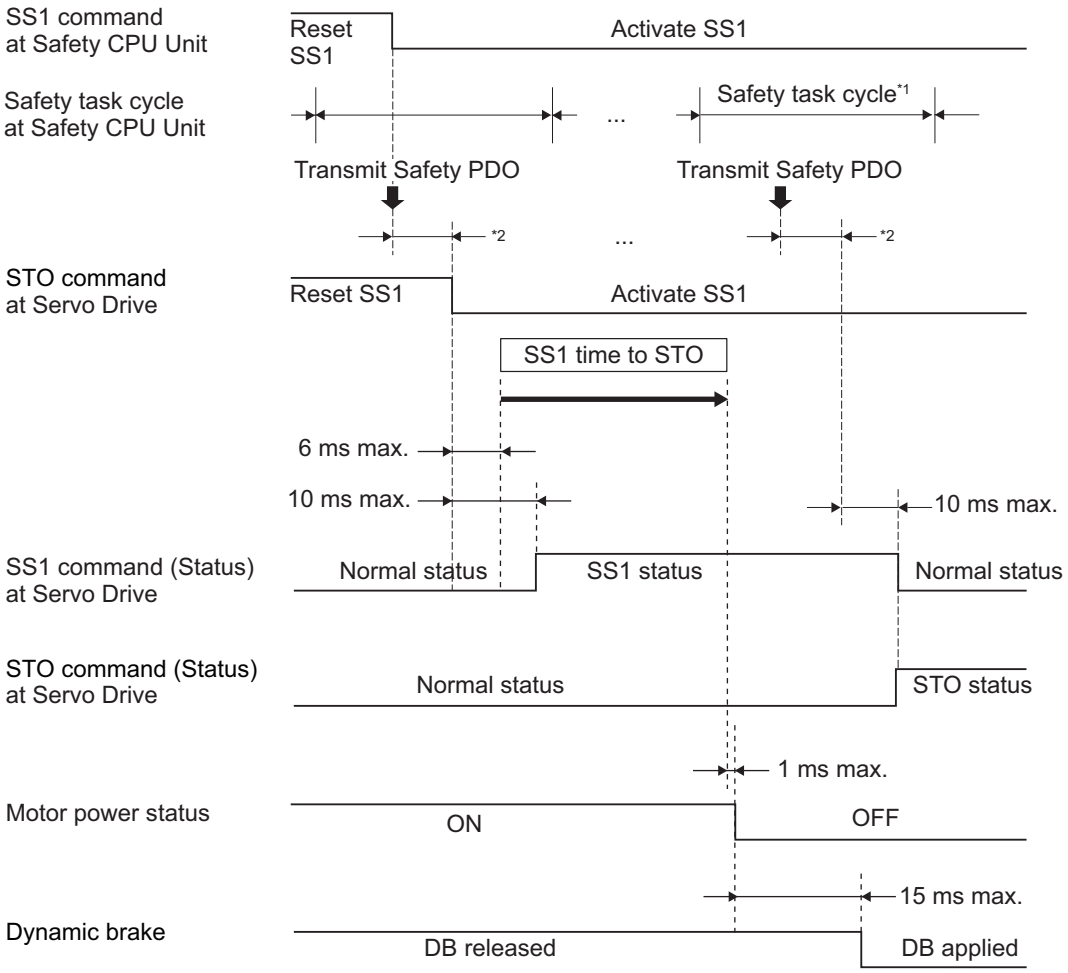

*1. As for safety task cycle, refer to *NX-series Safety Control Units User's Manual* (Cat. No. Z930).

*2. FSoE Communication Time.

Precautions for Correct Use

Even if SS1 Reset Command is used, the Servo Drive cannot cancel the SS1 function on the way, once after receiving SS1 Activate Command.

(b) Before the delay time passed, to activate STO at the same time when the motor stopped.

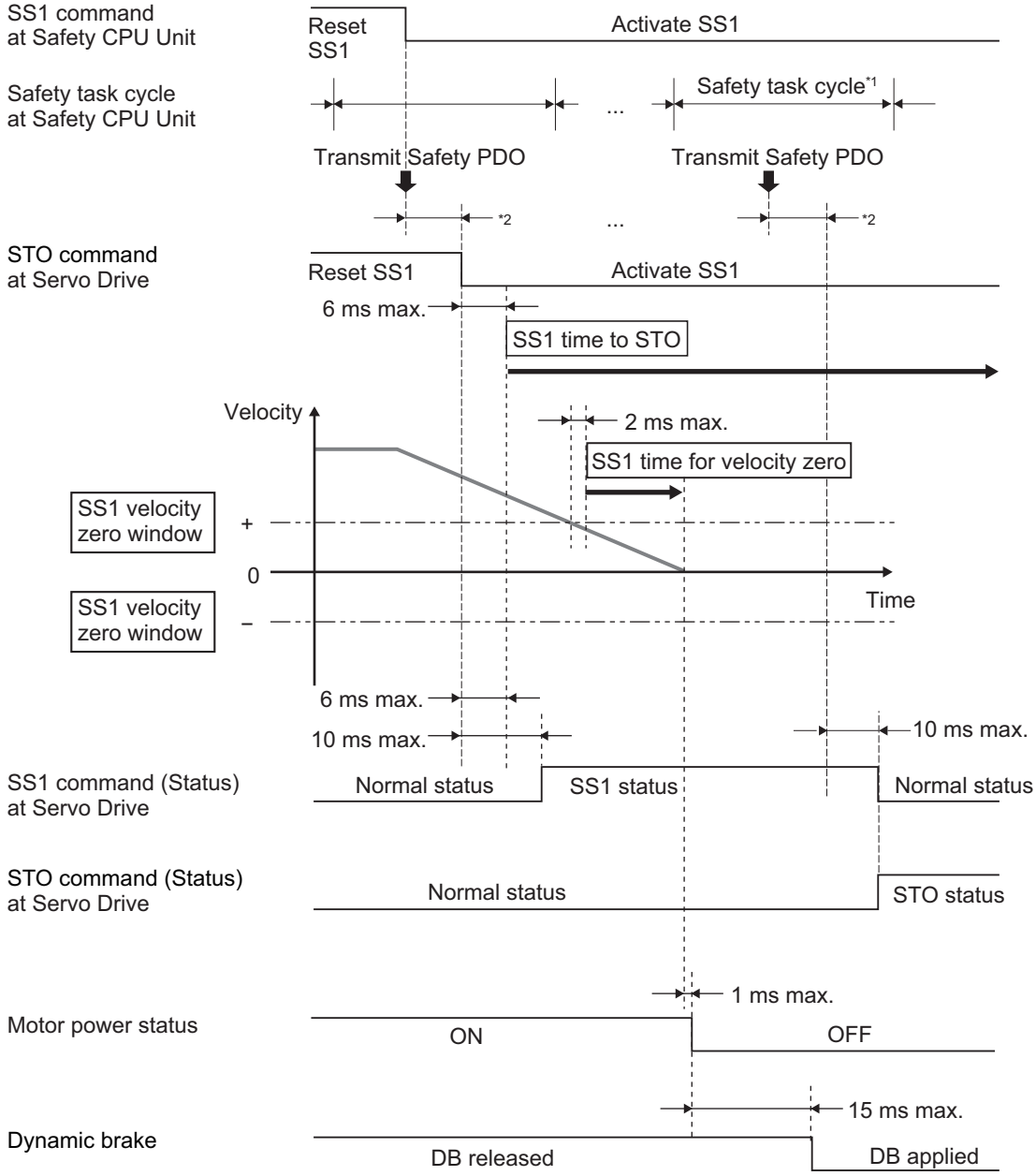

*1. As for safety task cycle, refer to *NX-series Safety Control Units User's Manual* (Cat. No. Z930).

*2. FSoE Communication Time.

Precautions for Correct Use

Even if SS1 Reset Command is used, the Servo Drive cannot cancel the SS1 function on the way, once after receiving SS1 Activate Command.

Operation Timing in Termination

This section describes timing when a Servo Drive terminates SS1 function by SS1 command.

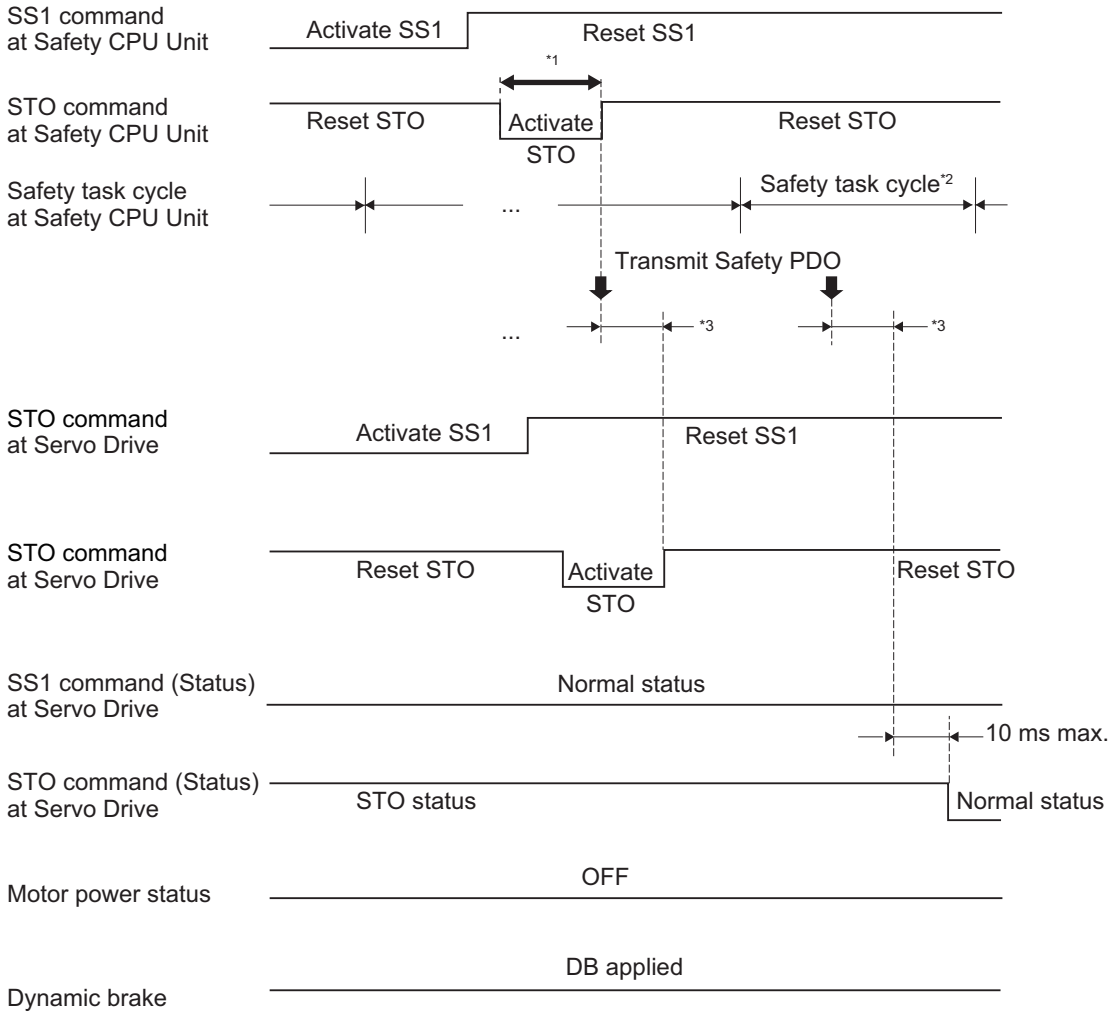

*1. Keep the same or longer length of FSoE Watch dog Timer setting.

*2. As for safety task cycle, refer to *NX-series Safety Control Units User's Manual* (Cat. No. Z930).

*3. FSoE Communication Time.

Precautions for Correct Use

For STO command, ensure to keep the same or longer of FSoE Watch dog Timer setting.

8-3-4 Example of Safety Program

This section gives an example of a program to use SS1 function of Servo Drive from Safety CPU Unit. Set safety process data communications to 1S-series Servo Drives Advance Type to use function block by Sysmac Studio.

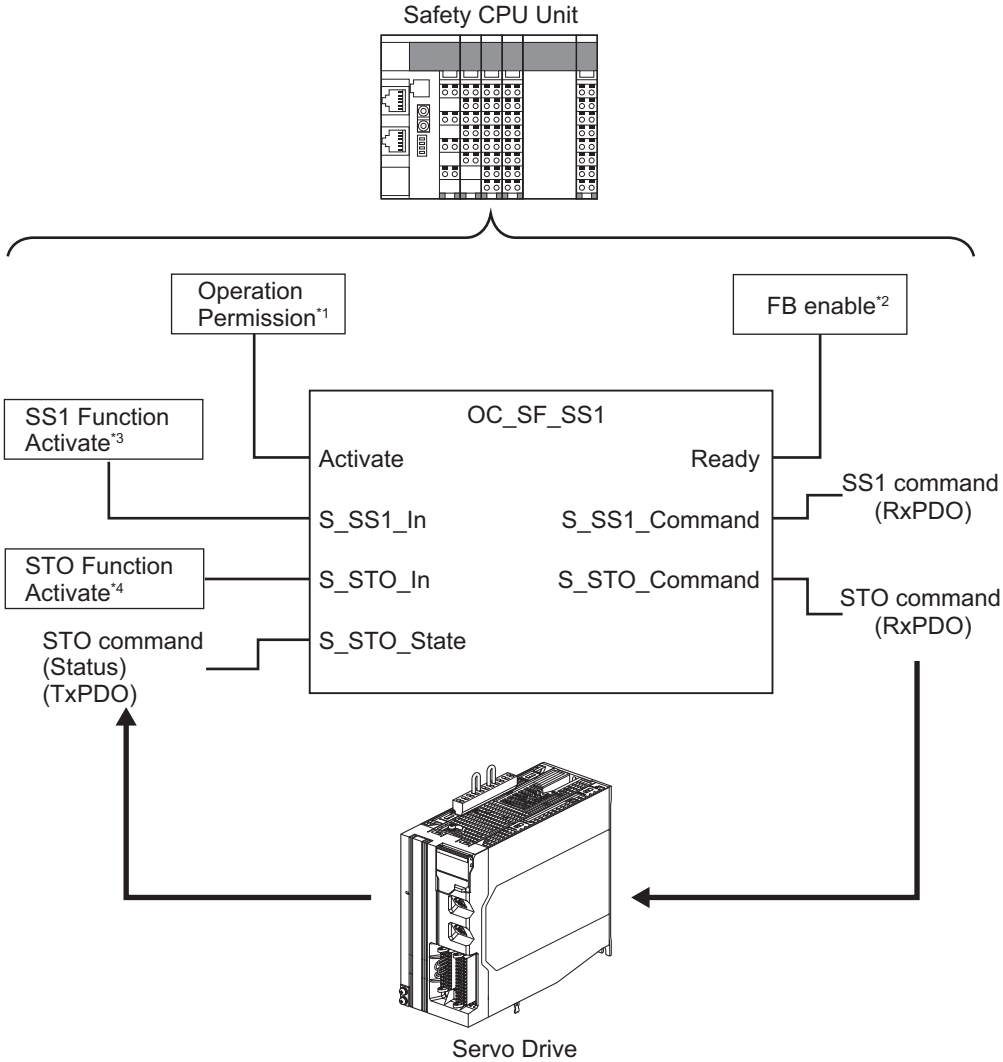

*1. Input the condition retained by the safety controller, such as safety connection status, to control the function blocks according to the system and programs.

*2. FB Enable means that function blocks are operable. You can input other function blocks and programs.

*3. Input SS1 function result on the system.

*4. Input STO function result on the system. Also you can use this to finish STO function.

For further information about function block “OC_SF_SS1”, refer to *A-5-3 Function block for 1S-series Servo Drives Advance Type* on page A-229.

For an example of using SS1 function, refer to *A-5-1 Function to Stop Servomotor* on page A-207.

8-3-5 Concurrent Use of SS1 Function and SBC Function

You can use SS1 function with Safe Brake Control (SBC) function concurrently.

Object Requiring Setting

Index (hex)	Subindex (hex)	Name	Description	Reference
6658	–	SS1 activate SBC	This setting is to activate SBC function concurrently while STO function is activated by SS1 function. Execute the setting for each SS1 command.	P. A-63
	01	SS1 activate SBC 1	Sets SBC command to SS1 command 1 00000000h: Not activate SBC command. 66600101h: Activate SBC command 1.	
	02	SS1 activate SBC 2	The function is the same as 01 hex.	
	03	SS1 activate SBC 3	The function is the same as 01 hex.	
	04	SS1 activate SBC 4	The function is the same as 01 hex.	
	05	SS1 activate SBC 5	The function is the same as 01 hex.	
	06	SS1 activate SBC 6	The function is the same as 01 hex.	
	07	SS1 activate SBC 7	The function is the same as 01 hex.	
	08	SS1 activate SBC 8	The function is the same as 01 hex.	
6661	–	SBC brake time delay	–	P. A-64
	01	SBC brake time delay	Set a brake delay time on use of SBC function.	

Operation Procedure

This section describes how to use the SS1 function with SBC function.

1 Carry out the brake wiring.

For wiring the brake, refer to *8-9 Safe Brake Control (SBC) Function* on page 8-112.

2 Set parameters.

- Set a SBC command to instances from **SS1 activate SBC - SS1 activate SBC 1** to **SS1 activate SBC 8** (6658-01 hex to 08 hex). Set a brake delay time on SBC use to **SBC brake time delay** (6661-01 hex).
  SBC brake time delay (6661-01 hex) interlocks with **SS1 time to STO** to **SS1 time to STO8** (6651-01 hex to 08 hex). For more detailed operation, refer to the timing chart.
- When you connect a brake via safety relay, set parameters **Safety Relay Activate** (4F08-00 hex), etc. As for the details, refer to *8-9 Safe Brake Control (SBC) Function* on page 8-112.

3 Use SS1 function.

When you use SS1 function, the condition goes into the STO status and SBC function is activated.

Operation Timing in Start

SBC function is activated at the timing when either of the following conditions are fulfilled.

(a) The time of "**SS1 time to STO** - **SBC brake time delay**" elapsed after count start of **SS1 time to STO**.

(b) The condition of "**Safety Preset Motor Velocity** ≤ **SS1 velocity zero window 1**" was continuously fulfilled during **SS1 time for velocity zero**.

When the SBC function is activated under condition (b) mentioned earlier, the following condition shall be additionally fulfilled.

"Deceleration time within **SS1 velocity zero window** + **SS1 time for velocity zero**" < "**SS1 time to STO** - **SBC brake time delay**"

The following are the examples of the timing described concretely.

(a) The time of "**SS1 time to STO - SBC brake time delay**" elapsed after count start of **SS1 time to STO**.

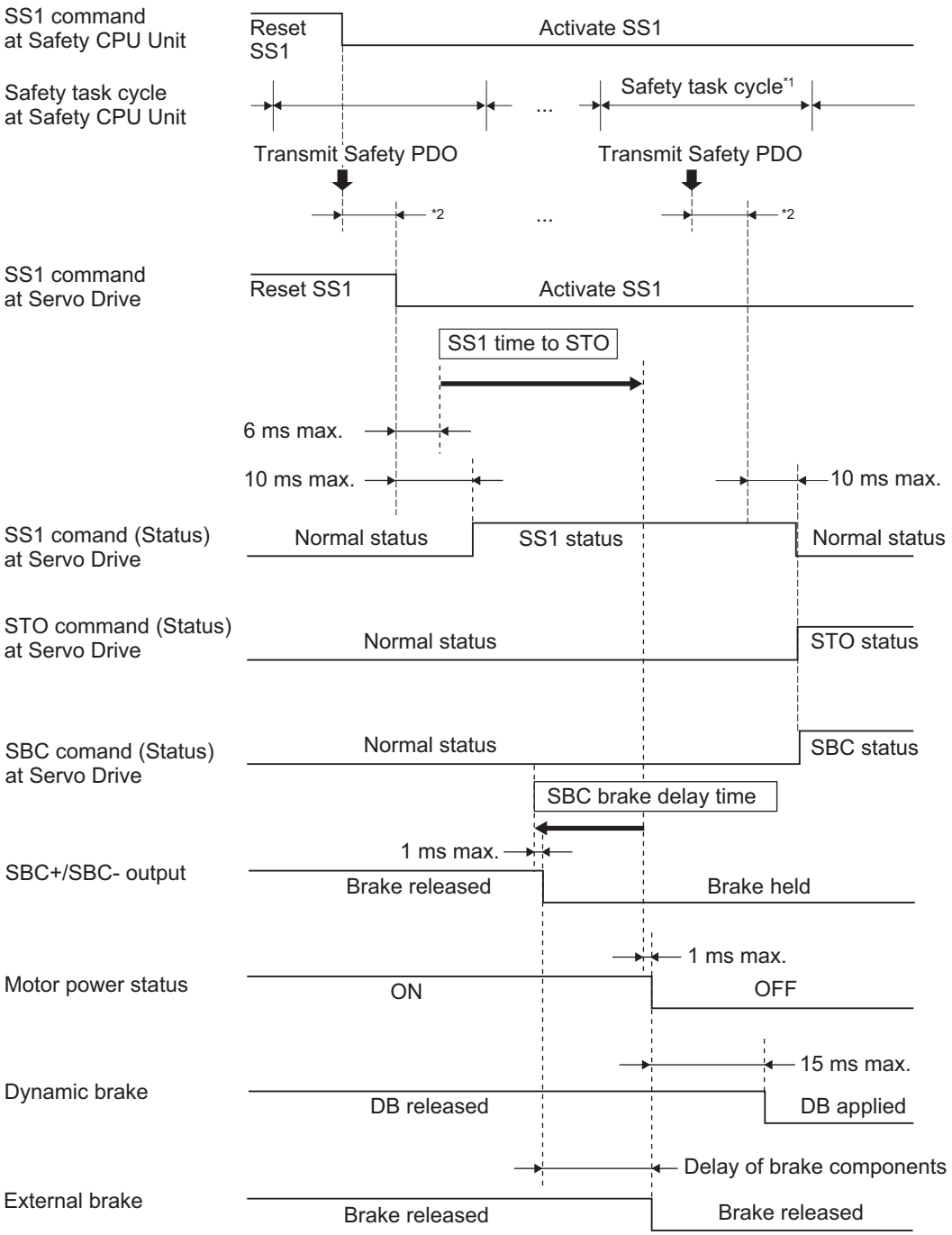

*1. As for safety task cycle, refer to *NX-series Safety Control Units User's Manual* (Cat. No. Z930).

*2. FSoE Communication Time.

In such case, the Servo Drives activate SBC function after a count of **SS1 time to STO** starts and the time "**SS1 time to STO - SBC brake time delay**" passes.

Precautions for Correct Use

Even if SS1 Reset Command is used, the Servo Drive cannot cancel the SS1 function on the way, once after receiving SS1 Activate Command.

(b) The condition of "**Safety Preset Motor Velocity ≤ SS1 velocity zero window 1**" was continuously fulfilled during **SS1 time for velocity zero**.

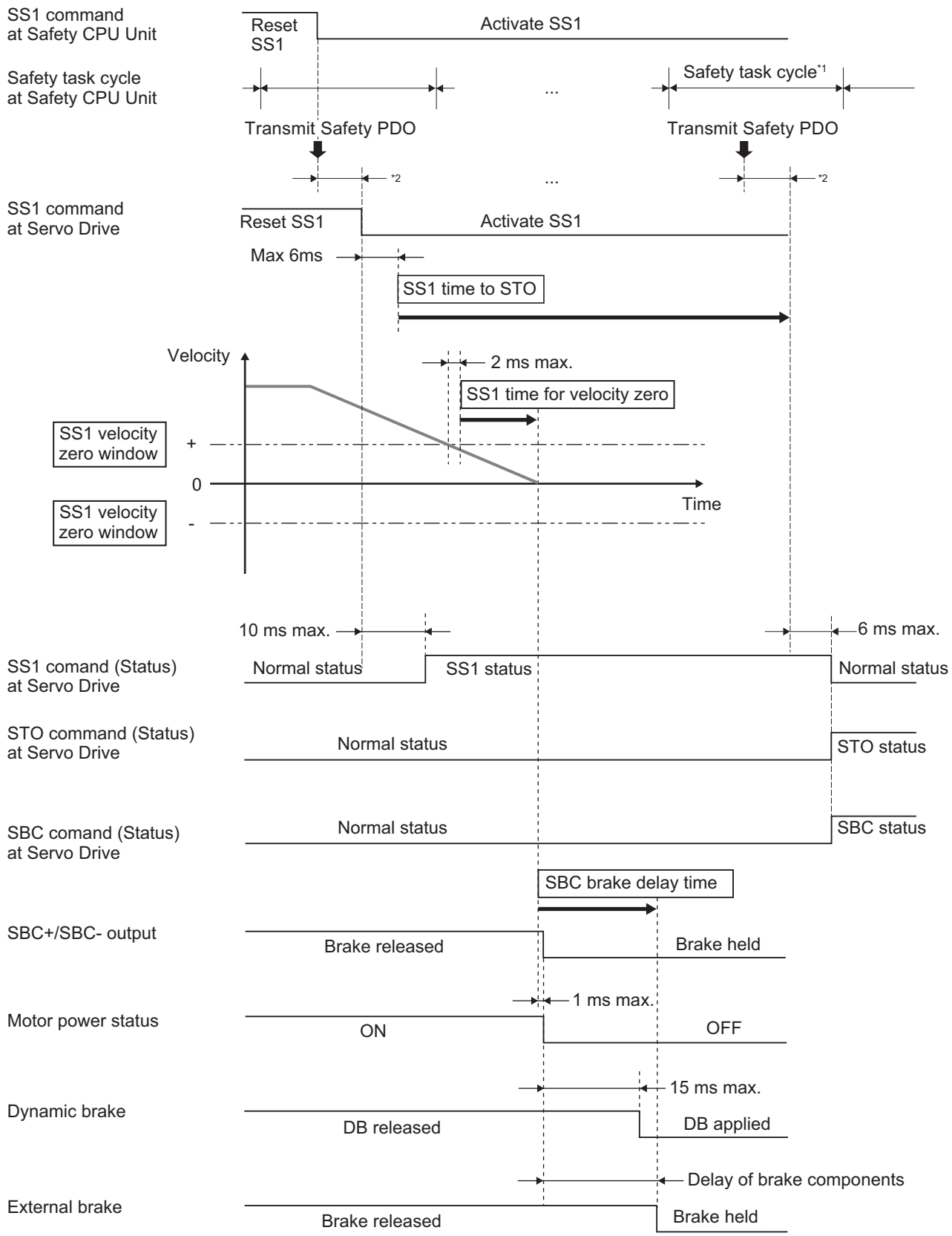

*1. As for safety task cycle, refer to *NX-series Safety Control Units User's Manual* (Cat. No. Z930).

*2. FSoE Communication Time.

In this case, SBC function is activated after the time of **SS1 time for velocity zero** elapsed under condition (b) mentioned earlier.

Precautions for Correct Use

- When interlocking the SBC function, if external forces such as gravity are applied on the vertical axes, the motor rotates until the external brake is held. Please use an additional brake if you want to keep holding the motor.
- Even if SS1 Reset Command is used, the Servo Drive cannot cancel the SS1 function on the way, once after receiving SS1 Activate Command.

Operation Timing in Termination

SBC function is reset when you reset STO function after resetting SS1 function.

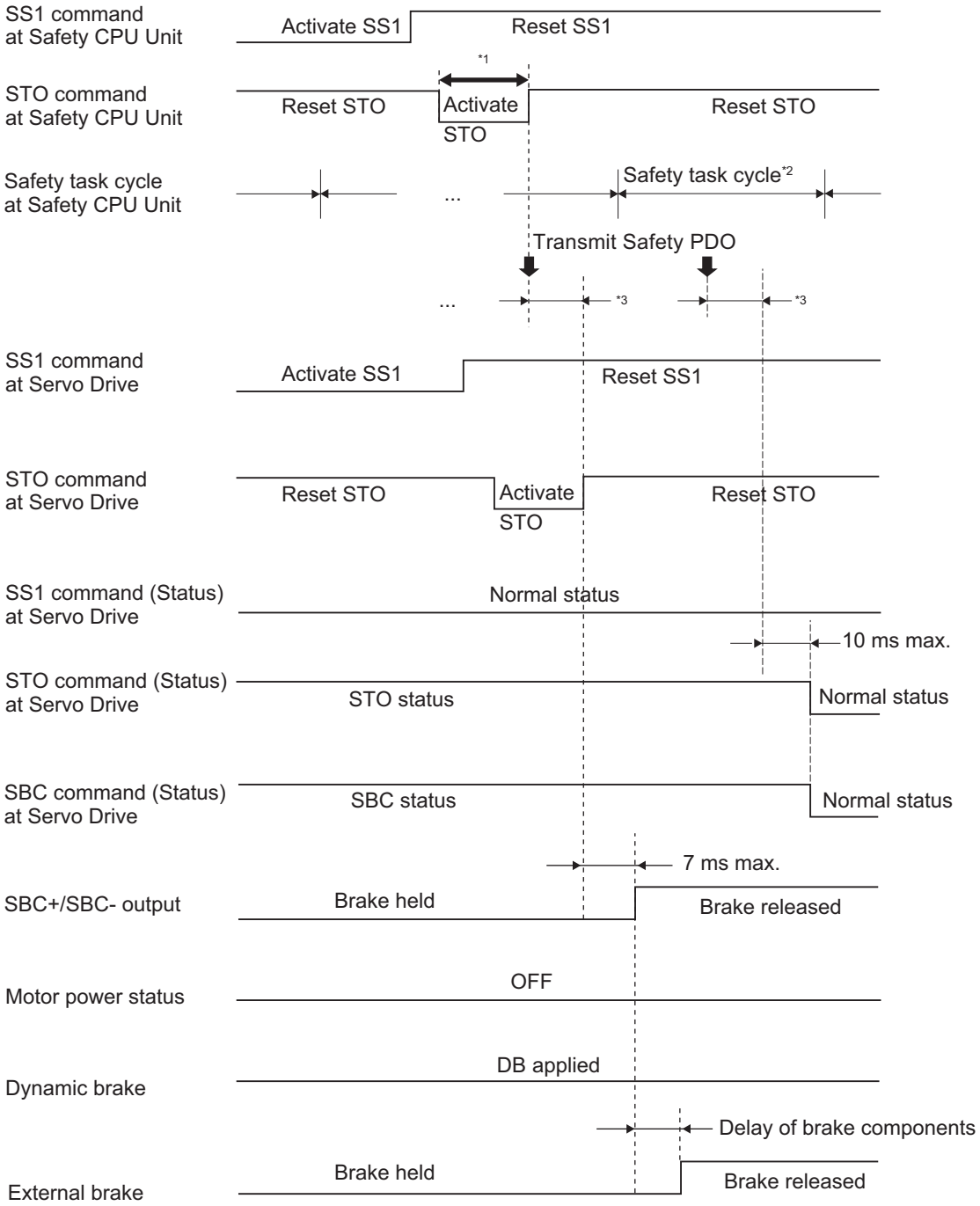

*1. Keep the same or longer length of FSoE Watch dog Timer setting.

*2. As for safety task cycle, refer to *NX-series Safety Control Units User's Manual* (Cat. No. Z930).

*3. FSoE Communication Time.

Precautions for Correct Use

For STO Command, ensure to keep the same or longer of FSoE Watch dog Timer setting.

8-4 Safe Stop 2 (SS2) Function

This function is used to monitor a motor's stop by activating SOS function at any timing after receiving a command from a safety controller. As for SOS function, refer to *8-5 Safe Operating Stop (SOS) Function* on page 8-62.

Set timing to activate SOS function with the two following ways.

(a) To operate SOS function after the delay time passed.

Set the time length, from receiving SS2 Activate Command to running SOS monitoring, to **SS2 time to SOS**. Refer to *8-1-6 Data Necessary for Designing Programs of Each Controller* on page 8-12 to set **SS2 time to SOS**.

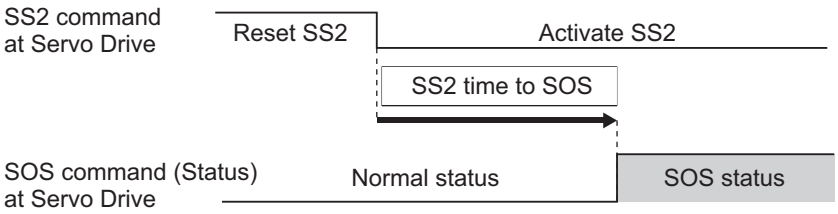

(b) To activate SOS function at the time the motor stopped before the delay time passed.

In addition to (a), if you controlled the motor to stop before **SS2 time to SOS** passed, SOS monitoring function starts at the time the motor stopped. In this case, ensure to set **SS2 time for velocity zero** within the range of **SOS velocity zero window**.

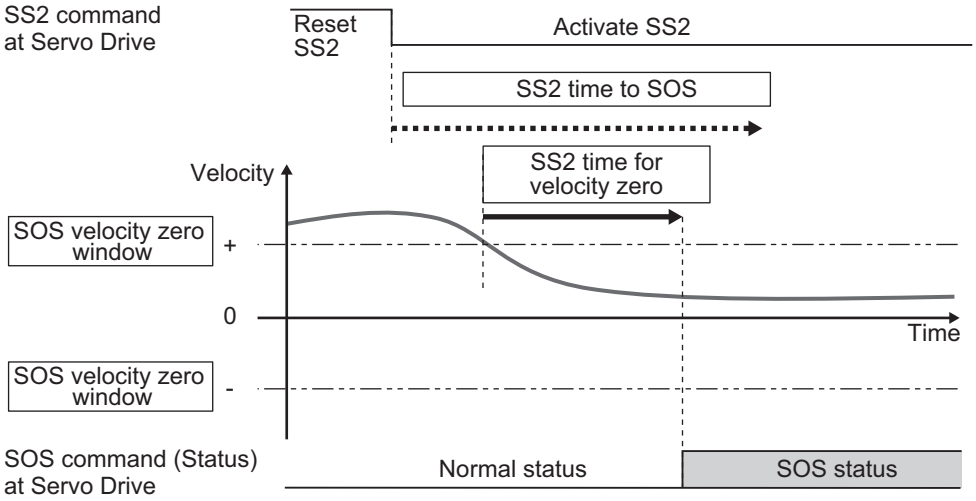

SOS starts monitoring when either condition of **SS2 time to SOS** or **SS2 time for velocity zero** is met earlier.

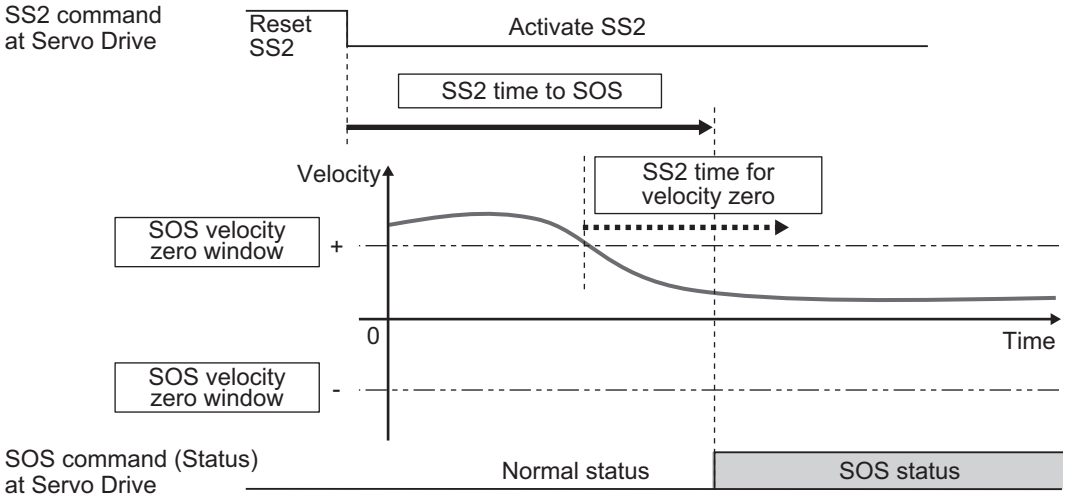

Precautions for Correct Use

- Set times so that **SS2 time for velocity zero** is less than or equal to **SS2 time to SOS**.
- Set times so that **SS2 time for velocity zero** is equal to **SS2 time to SOS** when activating SOS function with only way (a).

8-4-1 Objects Requiring Settings

Index (hex)	Subindex (hex)	Name	Description		Reference
6670	–	SS2 command	Gives SS2 function status and issues SS2 command.		P. A-69
	01	SS2 command 1	Gives SS2 instance 1 status and issues SS2 command.		
			Read	Givevs SS2 status. 0: Normal status 1: SS2 status	
			Write	Issues SS2 command. 0: Activate SS2 1: Reset SS2	
	02	SS2 command 2	The function is the same as 01 hex.		
	03	SS2 command 3	The function is the same as 01 hex.		
	04	SS2 command 4	The function is the same as 01 hex.		
	05	SS2 command 5	The function is the same as 01 hex.		
	06	SS2 command 6	The function is the same as 01 hex.		
	07	SS2 command 7	The function is the same as 01 hex.		
	08	SS2 command 8	The function is the same as 01 hex.		

Index (hex)	Subindex (hex)	Name	Description	Reference
6671	–	SS2 time to SOS	Sets a time until it activates SOS function after receiving SS2 Activate Command. Sets the time for each SS2 command.	P. A-70
	01	SS2 time to SOS 1	Sets a time until it activates SOS2 function after receiving SS2 command 1.	
	02	SS2 time to SOS 2	The function is the same as 01 hex.	
	03	SS2 time to SOS 3	The function is the same as 01 hex.	
	04	SS2 time to SOS 4	The function is the same as 01 hex.	
	05	SS2 time to SOS 5	The function is the same as 01 hex.	
	06	SS2 time to SOS 6	The function is the same as 01 hex.	
	07	SS2 time to SOS 7	The function is the same as 01 hex.	
	08	SS2 time to SOS 8	The function is the same as 01 hex.	
6672	–	SS2 time for velocity zero	Sets a time to determine that a motor stops. SOS function is activated after the set time for velocity zero passed when the motor velocity continuously fulfills one within SOS velocity zero window. Sets the time for each SS2 command.	P. A-70
	01	SS2 time for velocity zero 1	Sets the motor stop judgment time to SS2 command 1.	
	02	SS2 time for velocity zero 2	The function is the same as 01 hex.	
	03	SS2 time for velocity zero 3	The function is the same as 01 hex.	
	04	SS2 time for velocity zero 4	The function is the same as 01 hex.	
	05	SS2 time for velocity zero 5	The function is the same as 01 hex.	
	06	SS2 time for velocity zero 6	The function is the same as 01 hex.	
	07	SS2 time for velocity zero 7	The function is the same as 01 hex.	
	08	SS2 time for velocity zero 8	The function is the same as 01 hex.	

Precautions for Correct Use

- Use even numbers when you set values for **SS2 time to SOS - SS2 time to SOS 1** to **SS2 time to SOS 8** (6671-01 hex to 08 hex). The value +1 activates SOS function when using uneven numbers.
- Use even numbers when you set values for **SS2 time for velocity zero - SS2 time for velocity zero 1** to **SS2 time for velocity zero 8** (6672-01 hex to 08 hex). The value +1 activates SOS function when using uneven numbers.

8-4-2 Operation Procedure

This section describes how to use the SS2 function.

1 Assign SS2 function to safety PDO.

SS2 function was already assigned when only **SS2 command 1** is used.

Assign an instance from **SS2 command 2** to **SS2 command 8** (6670-02 hex to 08 hex) when other SS2 command is used.

As for the details, refer to *Setting of Fixed Safety PDO* on page 8-8.

2 Assign SOS function same as instance No. that was already assigned in SS2 assignment to Safety PDO.

SOS command is required to reset SOS activation after SS2 is activated.

Assign instance No. **SOS command 2** to **SOS command 8** (6668-02 hex to 08 hex) same as one in SS2 assignment. The assignment is not needed since **SOS command 1** was already assigned.

3 Set parameters.

- Set a time until SOS function is activated after receiving SS2 Activate Command into instances from **SS2 time to SOS - SS2 time to SOS 1** to **SS2 time to SOS 8** (6671-01 hex to 08 hex).
- Set a time to determine motor's stop into instances from **SS2 time for velocity zero - SS2 time for velocity zero 1** to **SS2 time for velocity zero 8** (6672-01 hex to 08 hex).
- Set parameters for SOS function with reference to *8-5 Safe Operating Stop (SOS) Function* on page 8-62.

4 Activate SS2 function.

SOS function is activated at the set timing when SS2 command assigned to safety PDO mapping is set to *0* (Activate SS2) from a safety controller.

8-4-3 Operation Timing

This section describes operation timing for SS2 function.

Operation Timing in Start

(a) To operate SOS function after the delay time passed.

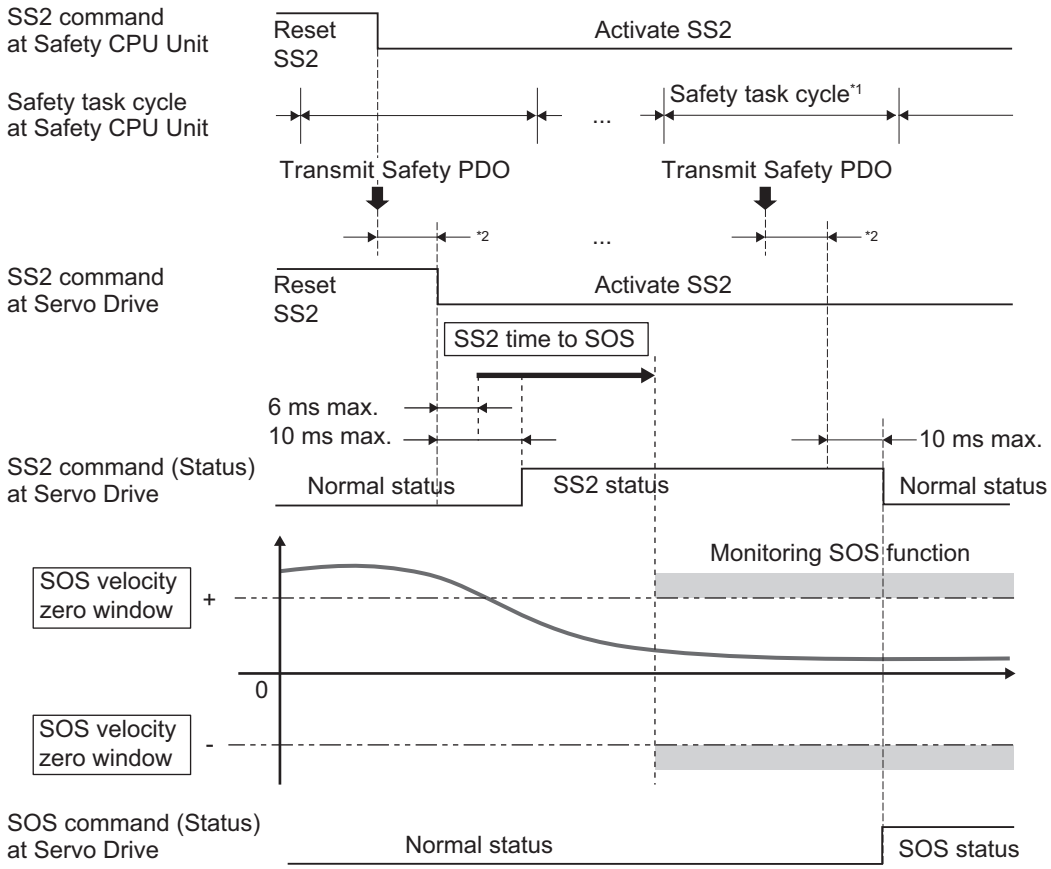

*1. As for safety task cycle, refer to *NX-series Safety Control Units User's Manual* (Cat. No. Z930).

*2. FSoE Communication Time.

Precautions for Correct Use

Even if SS2 Reset Command is used, the Servo Drive cannot cancel the SS2 function on the way, once after receiving SS2 Activate Command.

(b) To activate SOS function at the time the motor stopped before the delay time passed.

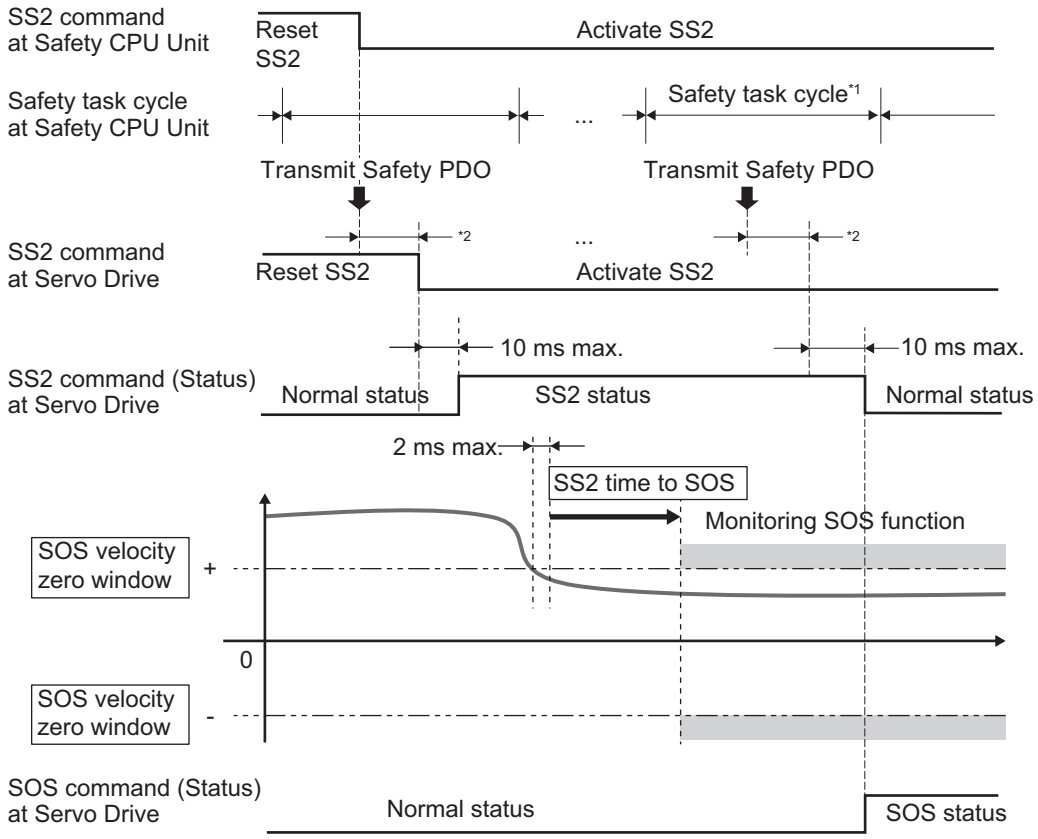

*1. As for safety task cycle, refer to *NX-series Safety Control Units User's Manual* (Cat. No. Z930).

*2. FSoE Communication Time.

Safety Function Setting Error (Error No. 71.00) occurs when setting the following parameter.
"**SS2 time to SOS** < **SS2 time for velocity zero**"

For operation to reset errors, refer to *8-1-10 Procedure for Reset of Safety Error* on page 8-20.

Precautions for Correct Use

Even if SS2 Reset Command is used, the Servo Drive cannot cancel the SS2 function on the way, once after receiving SS2 Activate Command.

Operation Timing in Error Detection

As for operation timing in error detection, refer to *Operation Timing in Error Detection* on page 8-65.

Operation Timing in Termination

This section describes timing when a Servo Drive terminates SS2 function and SOS function by a command. Use SS2 command and SOS command to terminate each function. Set SS2 command to *1* (Reset SS2) from *0* (Activate SS2) and SOS command to *1* (Reset SOS) from *0* (Activate SOS).

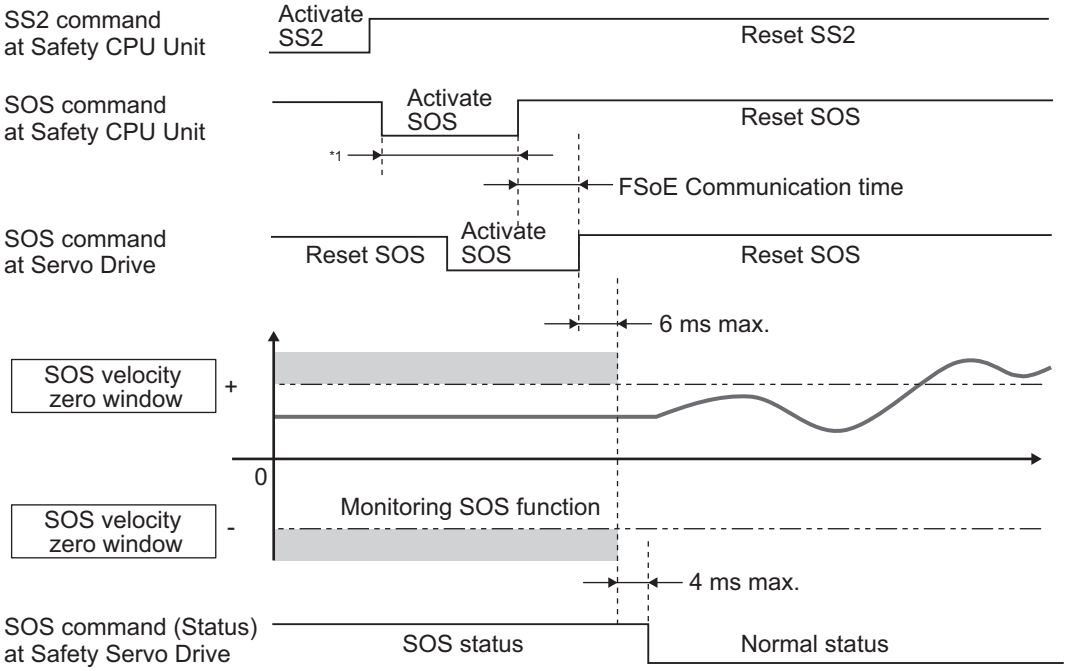

*1. Keep the same or longer length of FSoE Watch dog Timer setting.

Precautions for Correct Use

Keep the same or longer length of FSoE Watch dog Timer setting when inputting SOS command.

8-4-4 Example of Safety Program

This section gives an example of a program to use SS2 function of Servo Drive from Safety CPU Unit. Set safety process data communications to 1S-series Servo Drives Advance Type to use function block by Sysmac Studio.

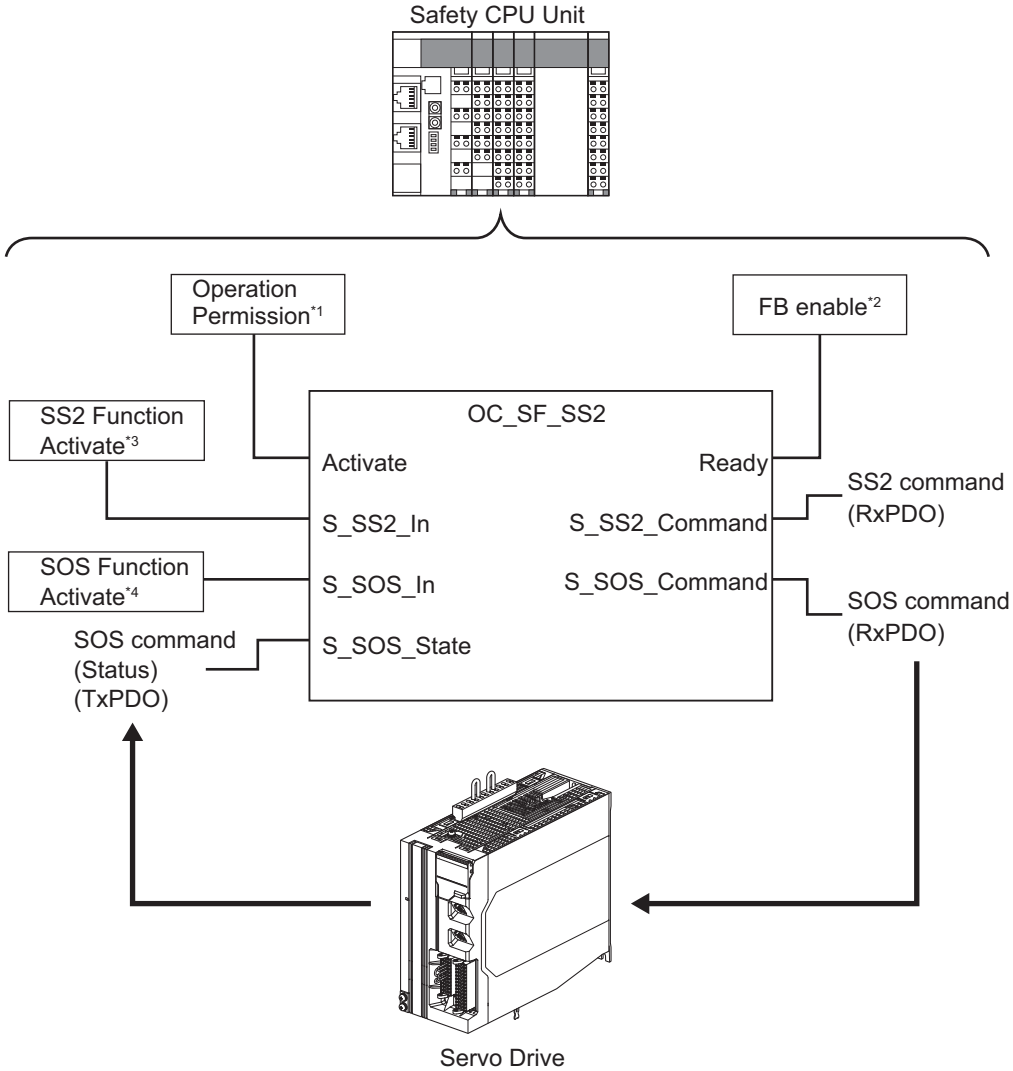

*1. Input the condition retained by the safety controller, such as safety connection status, to control the function blocks according to the system and programs.

*2. FB Enable means that function blocks are operable. You can input other function blocks and programs.

*3. Input SS2 function result on the system.

*4. Input SOS function result on the system. Also you can use this to finish SOS function.

For further information about function block “OC_SF_SS2”, refer to *A-5-3 Function block for 1S-series Servo Drives Advance Type* on page A-229.

8-5 Safe Operating Stop (SOS) Function

This function is used to monitor that a motor stops at any positions.

The position means one at timing when a motor received SOS command from a safety controller, or one at timing when SOS function activated by SS2 function became activated. Both a position and velocity are monitored, and Excessive Limit Value Error (Error No. 71.03) occurs when a motor rotates from a stop position.

8-5-1 Objects Requiring Settings

Index (hex)	Subindex (hex)	Name	Description		Reference
6668	–	SOS command	Gives SOS function status and issues SOS command.		P. A-67
	01	SOS command 1	Gives SOS instance 1 status and issues SOS command.		
			Read	Gives SOS status. 0: Normal status 1: SOS status	
			Write	Issues SOS Command. 0: Activate SOS 1: Reset SOS	
	02	SOS command 2	The function is the same as 01 hex.		
	03	SOS command 3	The function is the same as 01 hex.		
	04	SOS command 4	The function is the same as 01 hex.		
	05	SOS command 5	The function is the same as 01 hex.		
	06	SOS command 6	The function is the same as 01 hex.		
	07	SOS command 7	The function is the same as 01 hex.		
	08	SOS command 8	The function is the same as 01 hex.		
666A	–	SOS position zero window	Sets a window for monitoring from position zero when SOS function is activated. Sets a window for each SOS command.		P. A-68
	01	SOS position zero window 1	Sets window for monitoring from position zero to SOS command 1.		
	02	SOS position zero window 2	The function is the same as 01 hex.		
	03	SOS position zero window 3	The function is the same as 01 hex.		
	04	SOS position zero window 4	The function is the same as 01 hex.		
	05	SOS position zero window 5	The function is the same as 01 hex.		
	06	SOS position zero window 6	The function is the same as 01 hex.		
666A	07	SOS position zero window 7	The function is the same as 01 hex.		P. A-68
	08	SOS position zero window 8	The function is the same as 01 hex.		

Index (hex)	Subindex (hex)	Name	Description	Reference
666C	–	SOS velocity zero window	Sets a limit for monitoring of velocity zero. Sets a window for each SOS command.	P. A-69
	01	SOS velocity zero window 1	Sets the window for monitoring of velocity zero to SOS command 1.	
	02	SOS velocity zero window 2	The function is the same as 01 hex.	
	03	SOS velocity zero window 3	The function is the same as 01 hex.	
	04	SOS velocity zero window 4	The function is the same as 01 hex.	
	05	SOS velocity zero window 5	The function is the same as 01 hex.	
	06	SOS velocity zero window 6	The function is the same as 01 hex.	
	07	SOS velocity zero window 7	The function is the same as 01 hex.	
	08	SOS velocity zero window 8	The function is the same as 01 hex.	

Precautions for Correct Use

Set a multiple number of 128 to the setting value of **SOS position zero window - SOS position zero window 1** to **SOS position zero window 8** (666A-01 hex to 08 hex). If you set other number, the setting value is automatically corrected to the multiple number of 128 which does not exceed the setting value. Example: When the setting value is between 256 to 383, 256 is automatically set to the setting value for the operation.

8-5-2 Operation Procedure

This section describes how to use the SOS function.

1 Assign SOS function to safety PDO.

SOS function was already assigned when only **SOS command 1** is used.

Assign an instance from **SOS command 2** to **SOS command 8** (6668-02 hex to 08 hex) when other SOS command is used.

As for the details, refer to *Setting of Fixed Safety PDO* on page 8-8.

2 Set parameters.

Set **SOS position zero window** (666A-01 hex to 08 hex) and **SOS velocity zero window** (666C-01 hex to 08 hex) of instances that correspond to SOS command assigned in procedure 1.

3 Enable SOS function.

SOS function starts monitoring of a safety position and a motor's velocity when SOS command assigned to safety PDO mapping is set to *0* (Activate SOS) from a safety controller.

Precautions for Correct Use

Use different instances from ones for SS2 function when SOS function is used alone.

8-5-3 Operation Timing

This section describes operation timing for SOS function.

Operation Timing in Start

This section describes timing when a Servo Drive starts SOS function after receiving SOS command.

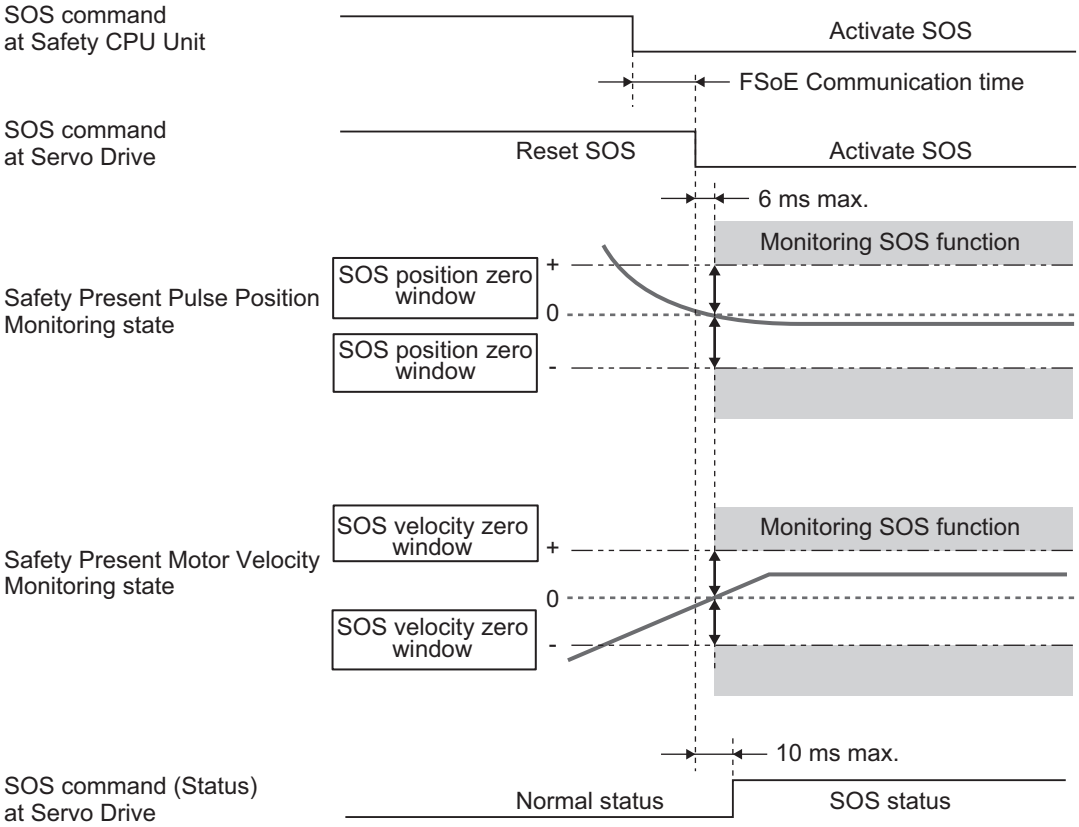

Operation Timing in Error Detection

(a) Timing when an error occurs due to out of **SOS position zero window** and STO function is activated.

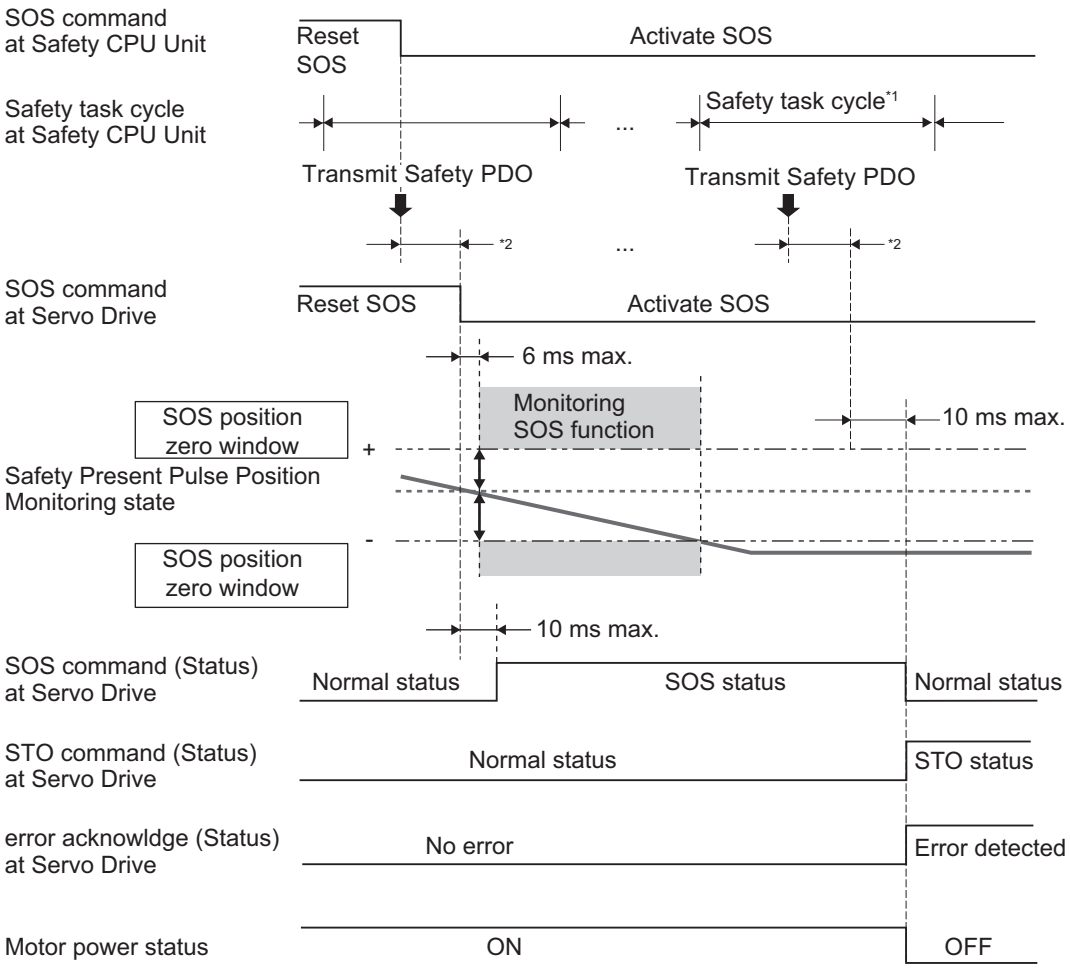

*1. As for safety task cycle, refer to *NX-series Safety Control Units User's Manual* (Cat. No. Z930).

*2. FSoE Communication Time.

Excessive Limit Value Error (Error No. 71.03) occurs when a safety present pulse position surpasses SOS position zero window. Before you reset an error, set SOS command to *1* (Reset SOS). As for the details about a procedure to reset an error, refer to *8-1-10 Procedure for Reset of Safety Error* on page 8-20.

(b) Timing when an error occurs due to out of **SOS velocity zero window** and STO function is activated.

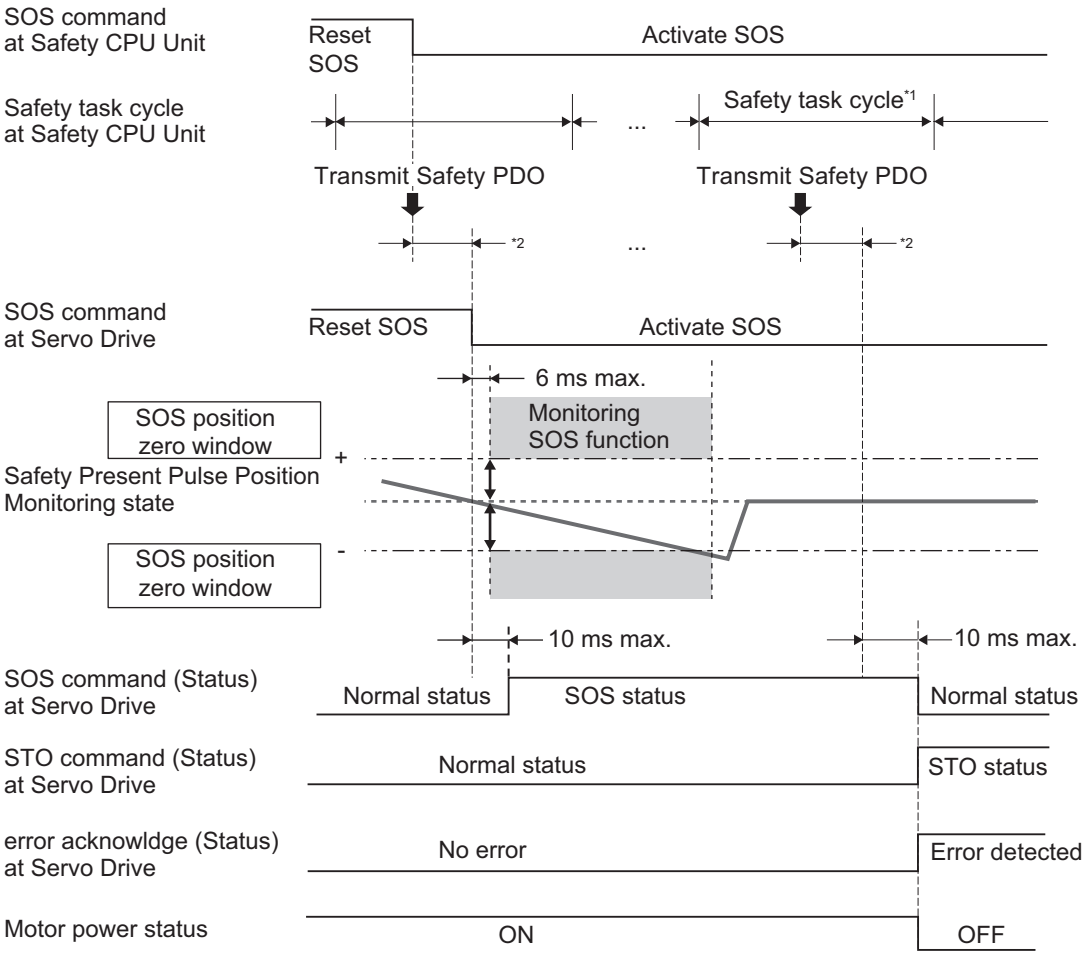

*1. As for safety task cycle, refer to *NX-series Safety Control Units User's Manual* (Cat. No. Z930).

*2. FSoE Communication Time.

Excessive Limit Value Error (Error No. 71.03) occurs and a Servo Drive goes into the STO status when a **Safety Present Motor Velocity** surpasses **SOS velocity zero window**. As for a method to reset errors, refer to *8-1-10 Procedure for Reset of Safety Error* on page 8-20.

Operation Timing in Termination

This section describes timing where a Servo Drive terminates SOS function by SOS command.

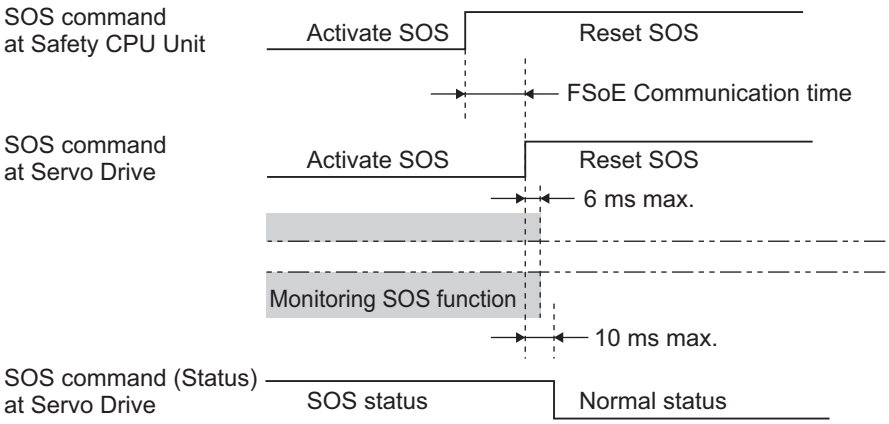

8-5-4 Example of Safety Program

This section gives an example of a program to use SOS function of Servo Drive from Safety controller.

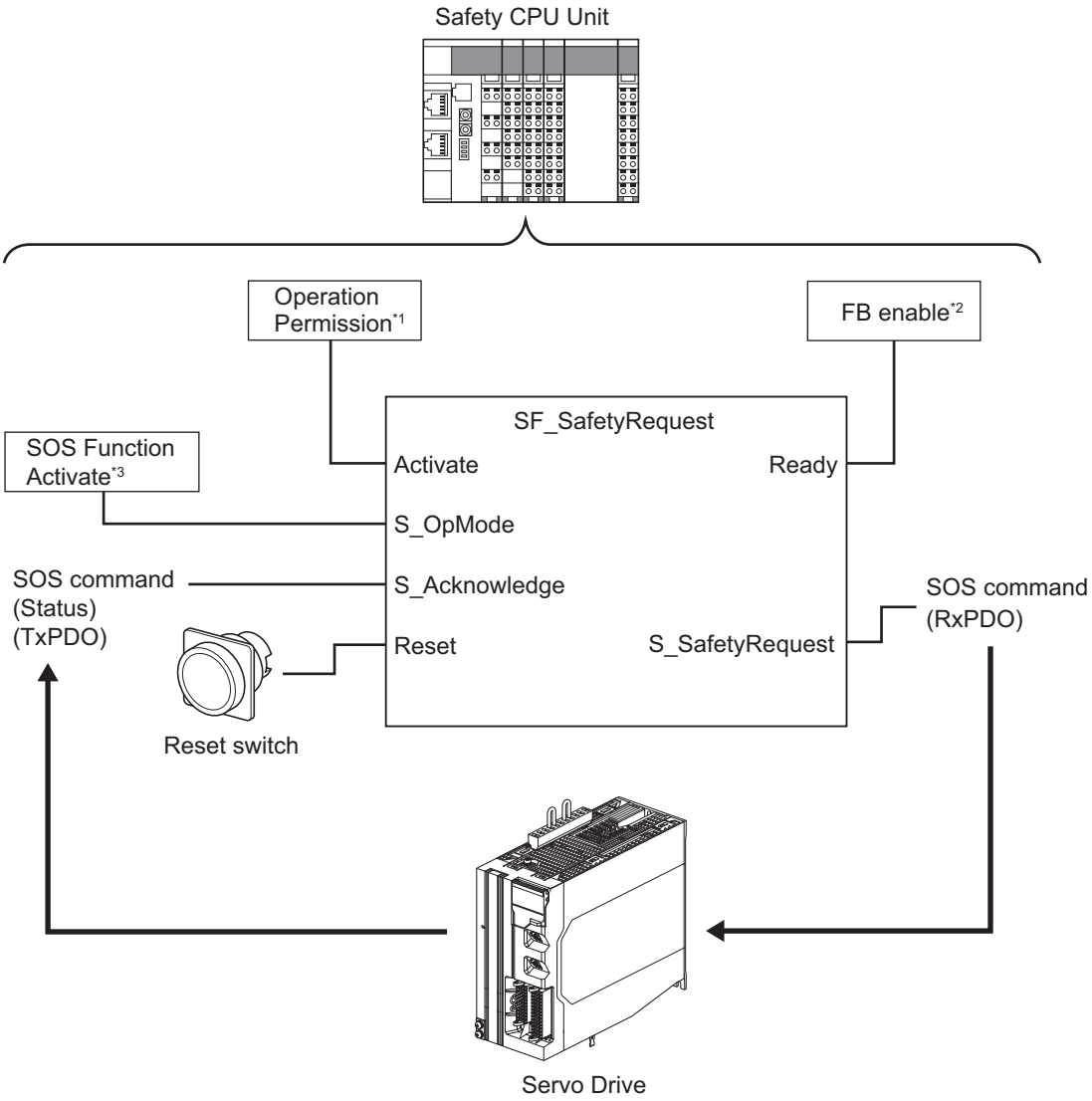

*1. When you input safety connection status, a safety controller can limit operations for function block according to status of a system or a program.

*2. It indicates that a function block can be activated. Also, it can be used as inputs of other function blocks and the programs.

*3. Input given SOS monitoring result for the system.

For details about function block SF_SafetyRequest, refer to the *Safety Control Unit Command Reference Manual* (Cat. No. Z931).

8-6 Safely-limited Speed (SLS) Function

This function is used to monitor present velocity. It monitors the velocity when SLS function is activated. Excessive Limit Value Error (Error No. 71.03) occurs when the velocity surpasses the specified limit.

Set a timing of SLS function with the two following ways.

(a) When the Servo drives activate SLS function after **SLS time to velocity monitoring** elapses

Set the time length, from receiving SLS Activate Command to running SLS monitoring, to **SLS time to velocity monitoring**. Refer to *8-1-6 Data Necessary for Designing Programs of Each Controller* on page 8-12 to set SLS time to velocity monitoring.

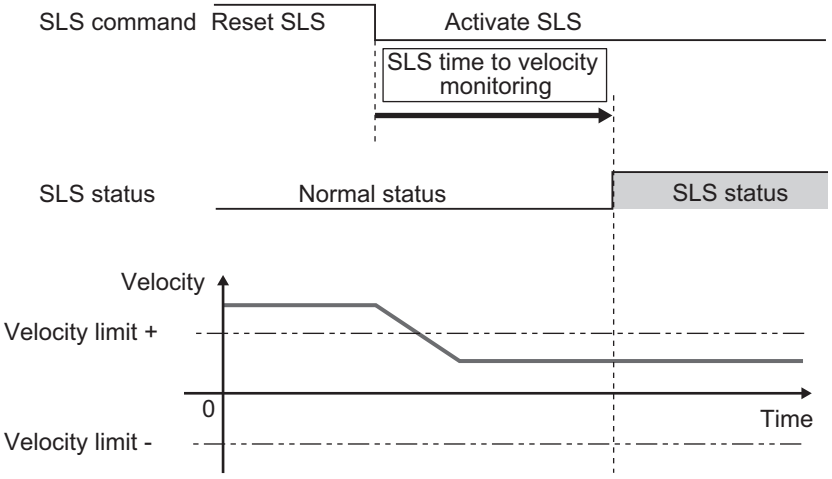

If the present velocity exceeds velocity limit before **SLS time to velocity monitoring** passed, SLS function starts monitoring, and immediately Excessive Limit Value Error (Error No. 71.03) occurs.

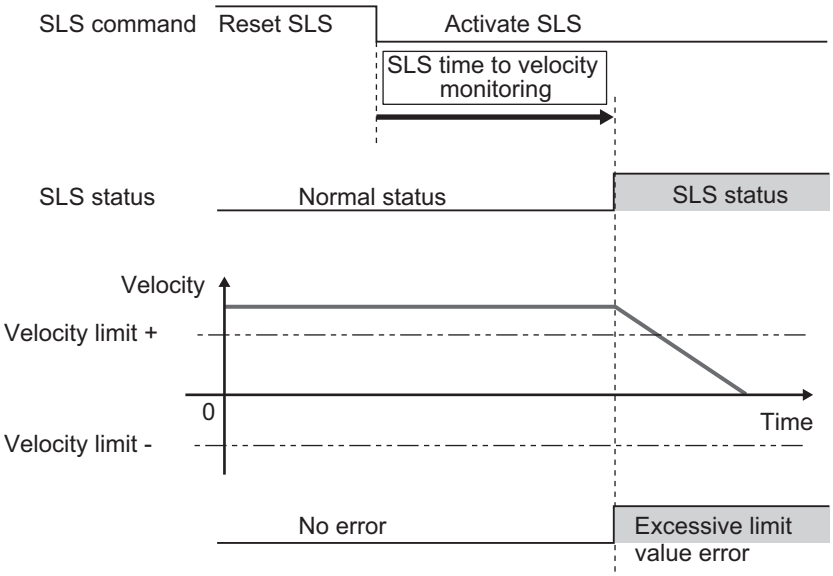

(b) To activate SLS function once the velocity arrives the velocity limit before the delay time passed.

In addition to (a), if the motor was decelerated to the velocity limit before **SLS time to velocity monitoring** passed, SLS monitoring function starts at the time the motor decelerated. In this case, set a time to **SLS time for velocity in limits** that determines that the motor velocity is within **velocity limit**.

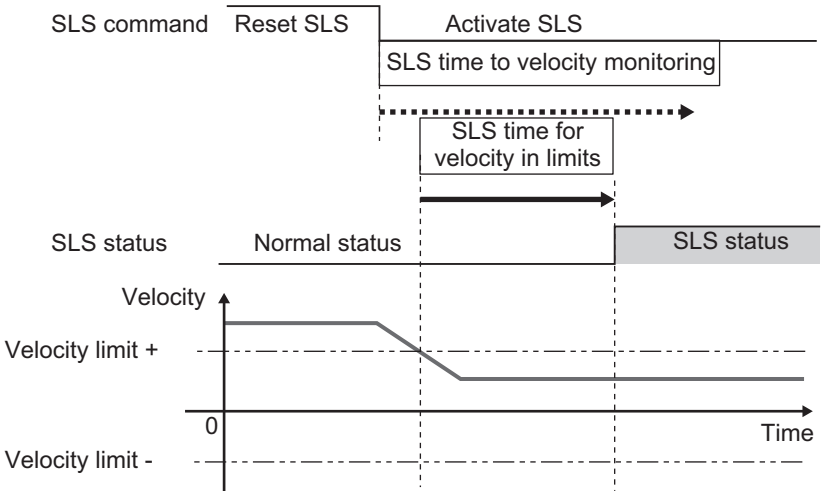

SLS starts monitoring when either condition of the **SLS time to velocity monitoring** or the **SLS time for velocity in limits** is met earlier.

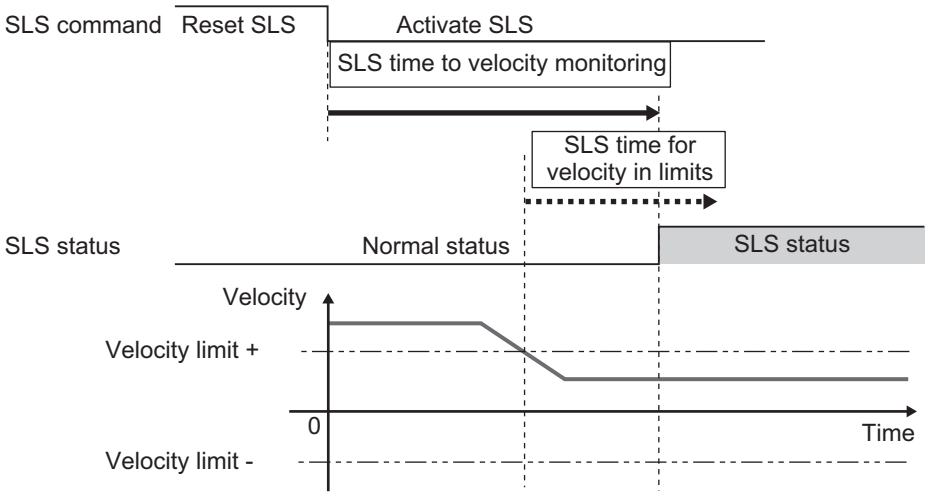

Precautions for Correct Use

- Set times so that **SLS time for velocity in limits** is less than or equal to **SLS time to velocity monitoring**.
- Set times so that **SLS time for velocity in limits** is equal to **SLS time to velocity monitoring** when activating SOS function with only way (a).

8-6-1 Objects Requiring Settings

Index (hex)	Subindex (hex)	Name	Description		Reference
6690	–	SLS command	Gives SLS function status and issues SLS command.		P. A-71
	01	SLS command 1	Gives SLS instance 1 status and issues SLS command.		
			Read	Gives SLS status. 0: Normal status 1: SLS status	
			Write	Issues SLS Command. 0: Activate SLS 1: Reset SLS	
	02	SLS command 2	The function is the same as 01 hex.		
	03	SLS command 3	The function is the same as 01 hex.		
	04	SLS command 4	The function is the same as 01 hex.		
	05	SLS command 5	The function is the same as 01 hex.		
	06	SLS command 6	The function is the same as 01 hex.		
	07	SLS command 7	The function is the same as 01 hex.		
	08	SLS command 8	The function is the same as 01 hex.		
6691	–	SLS time to velocity monitoring	Sets a time until it activates SLS function after receiving SLS command. Sets the time for each SLS command.		P. A-71
	01	SLS time to velocity monitoring 1	Sets a time until it activates SLS function after receiving SLS command 1.		
	02	SLS time to velocity monitoring 2	The function is the same as 01 hex.		
	03	SLS time to velocity monitoring 3	The function is the same as 01 hex.		
	04	SLS time to velocity monitoring 4	The function is the same as 01 hex.		
	05	SLS time to velocity monitoring 5	The function is the same as 01 hex.		
	06	SLS time to velocity monitoring 6	The function is the same as 01 hex.		
	07	SLS time to velocity monitoring 7	The function is the same as 01 hex.		
	08	SLS time to velocity monitoring 8	The function is the same as 01 hex.		
6693	–	SLS velocity limit	Sets velocity limit with SLS function.		P. A-72
	01	SLS velocity limit 1	Sets velocity limit to SLS command 1. Sets the time for each SLS command.		
	02	SLS velocity limit 2	The function is the same as 01 hex.		
	03	SLS velocity limit 3	The function is the same as 01 hex.		
	04	SLS velocity limit 4	The function is the same as 01 hex.		
	05	SLS velocity limit 5	The function is the same as 01 hex.		
	06	SLS velocity limit 6	The function is the same as 01 hex.		
	07	SLS velocity limit 7	The function is the same as 01 hex.		
	08	SLS velocity limit 8	The function is the same as 01 hex.		

Index (hex)	Subindex (hex)	Name	Description	Reference
6694	–	SLS time for velocity in limits	Sets a time to determine the velocity in its limit. SLS function is activated after the SLS time for velocity in limits passed when the motor's velocity continuously keeps one within SLS velocity limit. Sets the time for each SLS command.	P. A-72
	01	SLS time for velocity in limits 1	Sets SLS time for velocity in limits to SLS command 1. Sets the time for each SLS command.	
	02	SLS time for velocity in limits 2	The function is the same as 01 hex.	
	03	SLS time for velocity in limits 3	The function is the same as 01 hex.	
	04	SLS time for velocity in limits 4	The function is the same as 01 hex.	
	05	SLS time for velocity in limits 5	The function is the same as 01 hex.	
	06	SLS time for velocity in limits 6	The function is the same as 01 hex.	
	07	SLS time for velocity in limits 7	The function is the same as 01 hex.	
	08	SLS time for velocity in limits 8	The function is the same as 01 hex.	
4F16	–	Error Detection Activate In SLS Deactivate	Sets existence/non-existence of detection Safety Function Error to SLS Reset Command. Sets the error detection for each SLS command.	P. 9-138
	01	Error Detection Activate In SLS Deactivate 1	Sets existence/non-existence of error detection by safety function to SLS command 1. 0: Deactivate 1: Activate	
	02	Error Detection Activate In SLS Deactivate 2	The function is the same as 01 hex.	
	03	Error Detection Activate In SLS Deactivate 3	The function is the same as 01 hex.	
	04	Error Detection Activate In SLS Deactivate 4	The function is the same as 01 hex.	
	05	Error Detection Activate In SLS Deactivate 5	The function is the same as 01 hex.	
	06	Error Detection Activate In SLS Deactivate 6	The function is the same as 01 hex.	
	07	Error Detection Activate In SLS Deactivate 7	The function is the same as 01 hex.	
	08	Error Detection Activate In SLS Deactivate 8	The function is the same as 01 hex.	

Precautions for Correct Use

- Set an even number to **SLS time to monitoring velocity - SLS time to velocity monitoring 1** to **SLS time to velocity monitoring 8** (6691-01 hex to 08 hex). When a setting value is an odd number, the function is activated as the value +1.
- Set an even number to **SLS time for velocity in limits - SLS time for velocity in limits 1** to **SLS time for velocity in limits 8** (6694-01 hex to 08 hex). When a setting value is an odd number, the function is activated as the value +1.

8-6-2 Operation Procedure

This section describes how to use the SLS function.

1 Assign SLS function to safety PDO.

Assign an instance from **SLS command - SLS command 1** to **SLS command 8** (6690-01 hex to 08 hex) into safety PDO. As for the details, refer to *Setting of Fixed Safety PDO* on page 8-8.

2 Set parameters.

- Set a time from receiving of SLS Activate Command to SLS activation into instances for **SLS time to velocity monitoring - SLS time to velocity monitoring 1** to **SLS time to velocity monitoring 8** (6691-01 hex to 08 hex).
- Set a time to determine the velocity in its limit into instances for **SLS time for velocity in limits - SLS time for velocity in limits 1** to **SLS time for velocity in limits 8** (6694-01 hex to 08 hex).
- Set a velocity monitoring limit into instances for **SLS velocity limit - SLS velocity limit 1** to **SLS velocity limit 8** (6692-01 to 08 hex).
- Set existence/non-existence of error detection by safety function into instances for **Error Detection Activate In SLS Deactivate - Error Detection Activate In SLS Deactivate 1** to **Error Detection Activate In SLS Deactivate 8** (4F16-01 hex to 08 hex).

3 Activate SLS function.

SLS function is activated at the set timing when SLS command assigned to safety PDO is set to *0* (Activate SLS) from a safety controller.

8-6-3 Operation Timing

This section describes operation timing for SLS function.

Operation Timing in Start

A Servo Drive starts monitoring of Safety Present Motor Velocity when you set SLS command, which is assigned to safety PDO, to *0* (Activate SLS).

(a) When the Servo drives activate SLS function after **SLS time to velocity monitoring** elapses

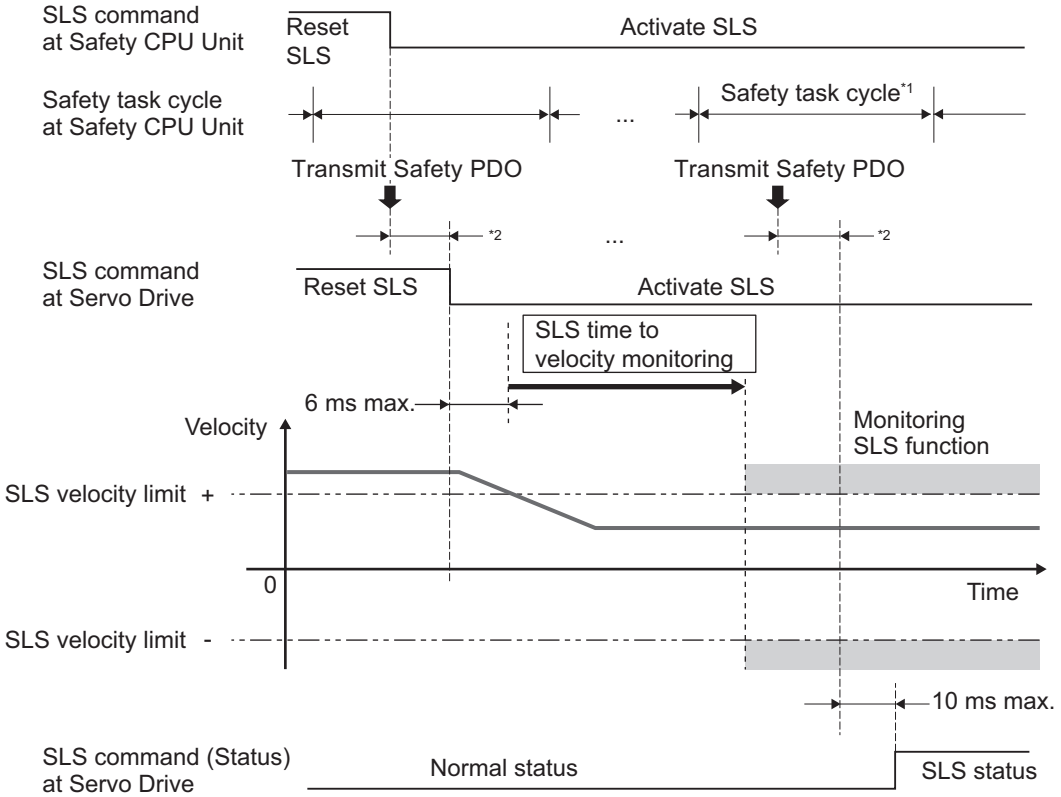

*1. As for safety task cycle, refer to *NX-series Safety Control Units User's Manual* (Cat. No. Z930).

*2. FSoE Communication Time.

(b) To activate SLS function once the velocity arrives the velocity limit before the delay time passed.

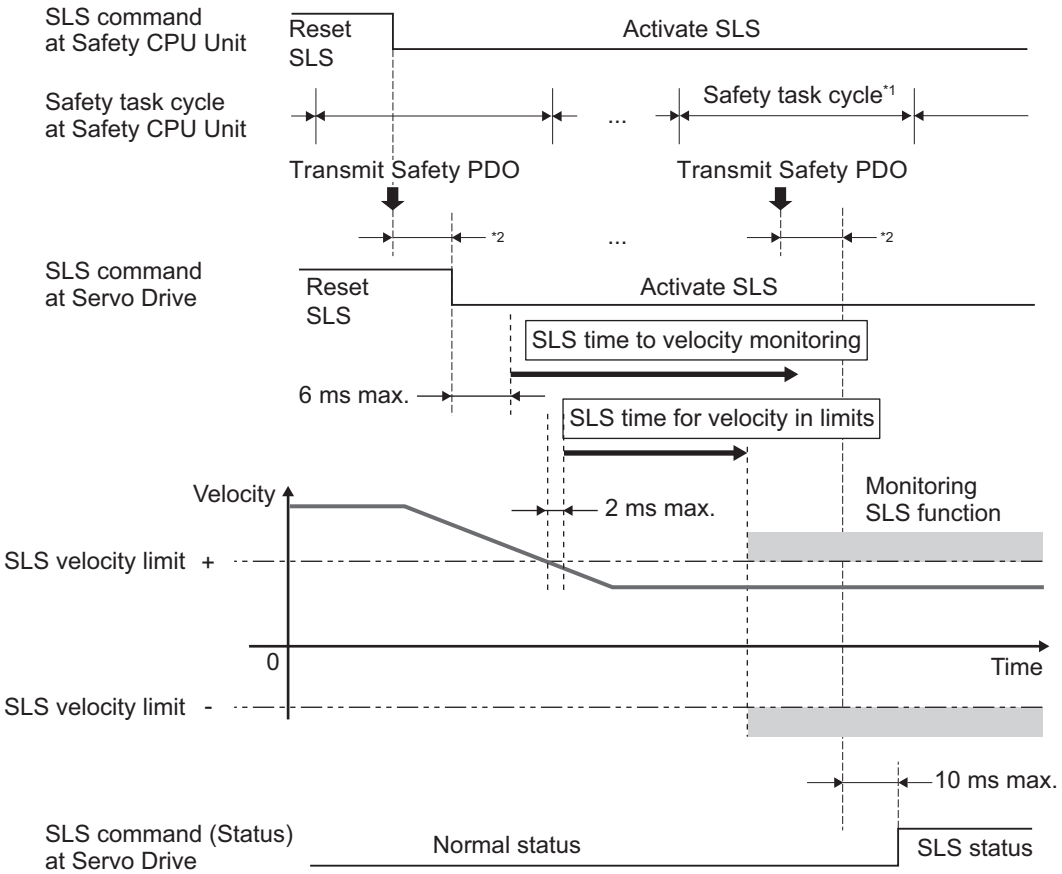

*1. As for safety task cycle, refer to *NX-series Safety Control Units User's Manual* (Cat. No. Z930).

*2. FSoE Communication Time.

Operation Timing in Error Detection

Excessive Limit Value Error (Error No. 71.03) occurs when a Safety Present Motor Velocity exceeds the velocity limit, and then SLS function goes into the STO status. To reset the error, refer to *8-1-10 Procedure for Reset of Safety Error* on page 8-20.

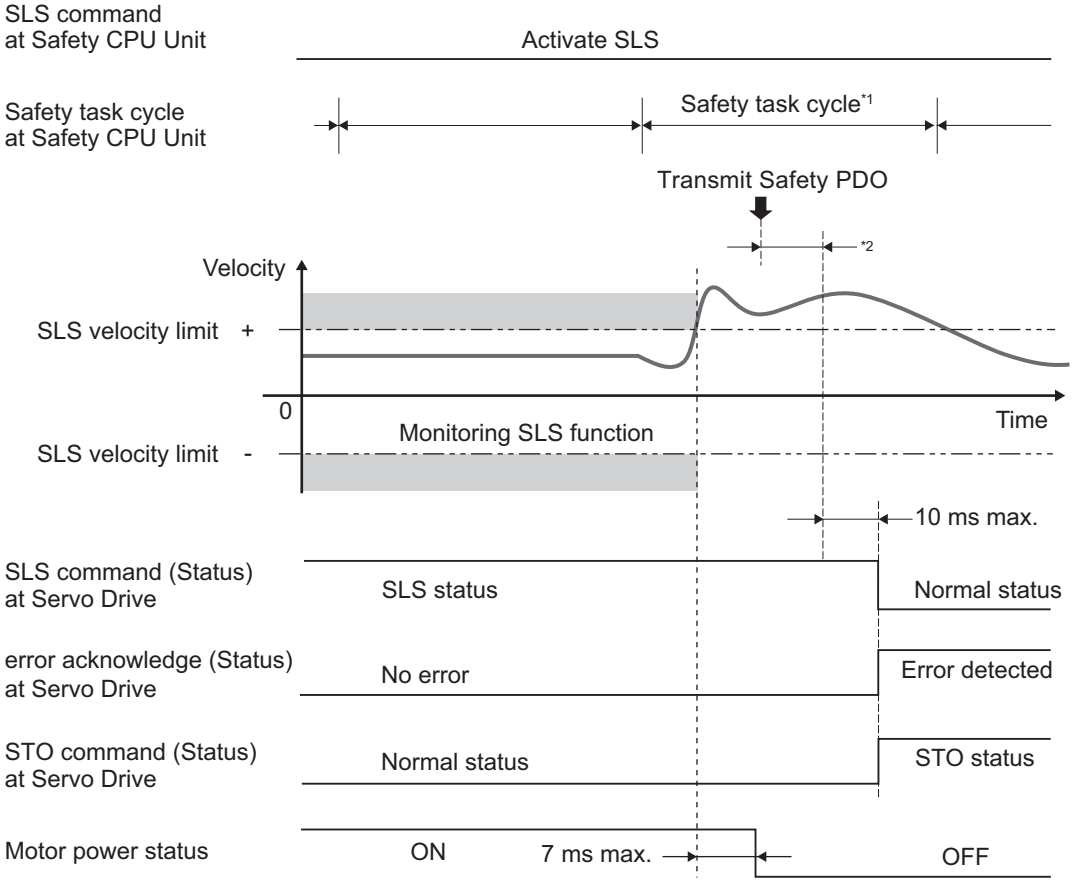

*1. As for safety task cycle, refer to *NX-series Safety Control Units User's Manual* (Cat. No. Z930).

*2. FSoE Communication Time.

Under condition that **Error Detection Activate in SLS Deactivate** (4F16 hex) is set to *1* (Activate), you set SLS command to *1* (Reset SLS) before **SLS command (Status)** enters *1* (SLS status), Safety Function Error (Error No. 71.02) occurs and a Servo Drive goes into the STO status.

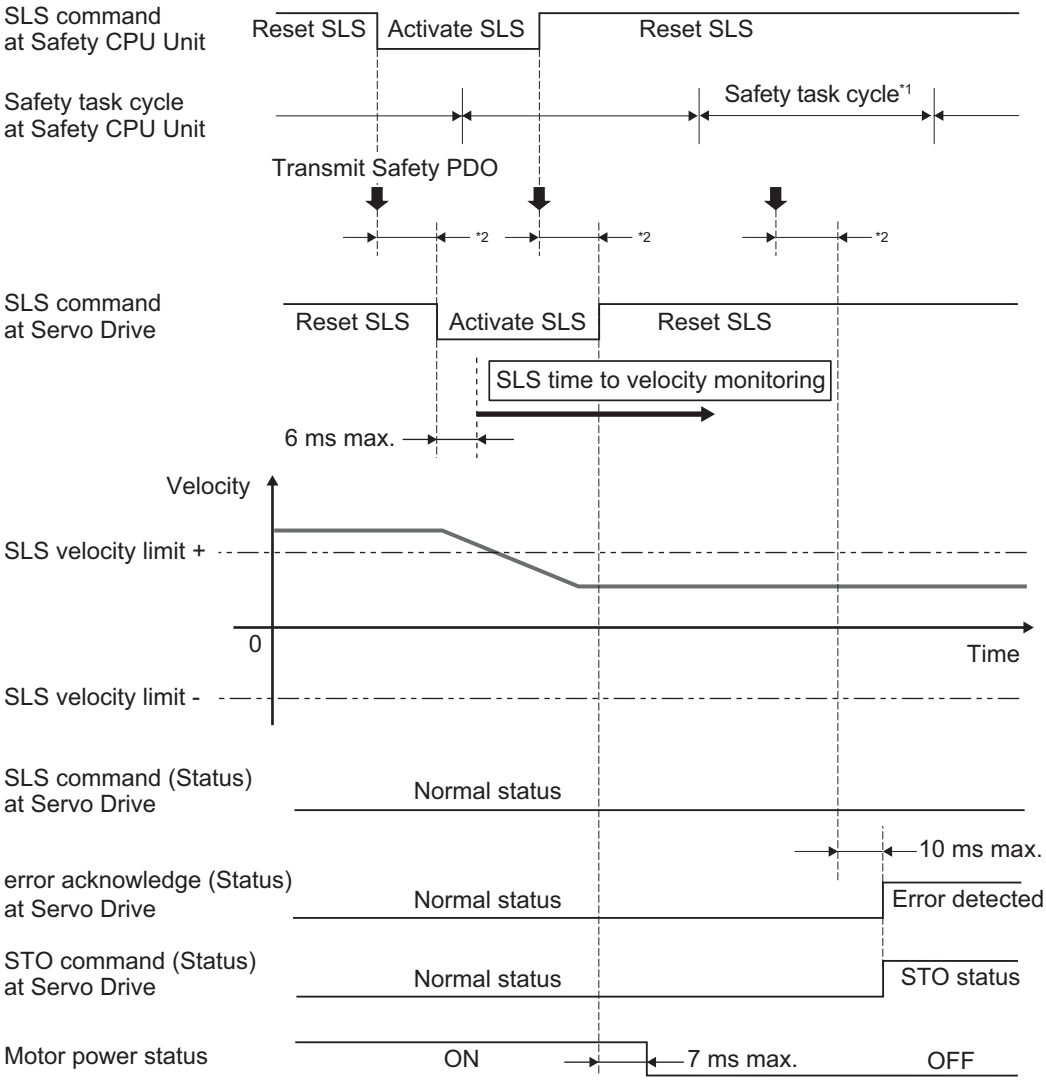

*1. As for safety task cycle, refer to *NX-series Safety Control Units User's Manual* (Cat. No. Z930).

*2. FSoE Communication Time.

When you set **Error Detection Activate In SLS Deactivate** (4F16 hex) to *0* (Deactivate), the error does not occur and Servo Drive does not go into the STO status.

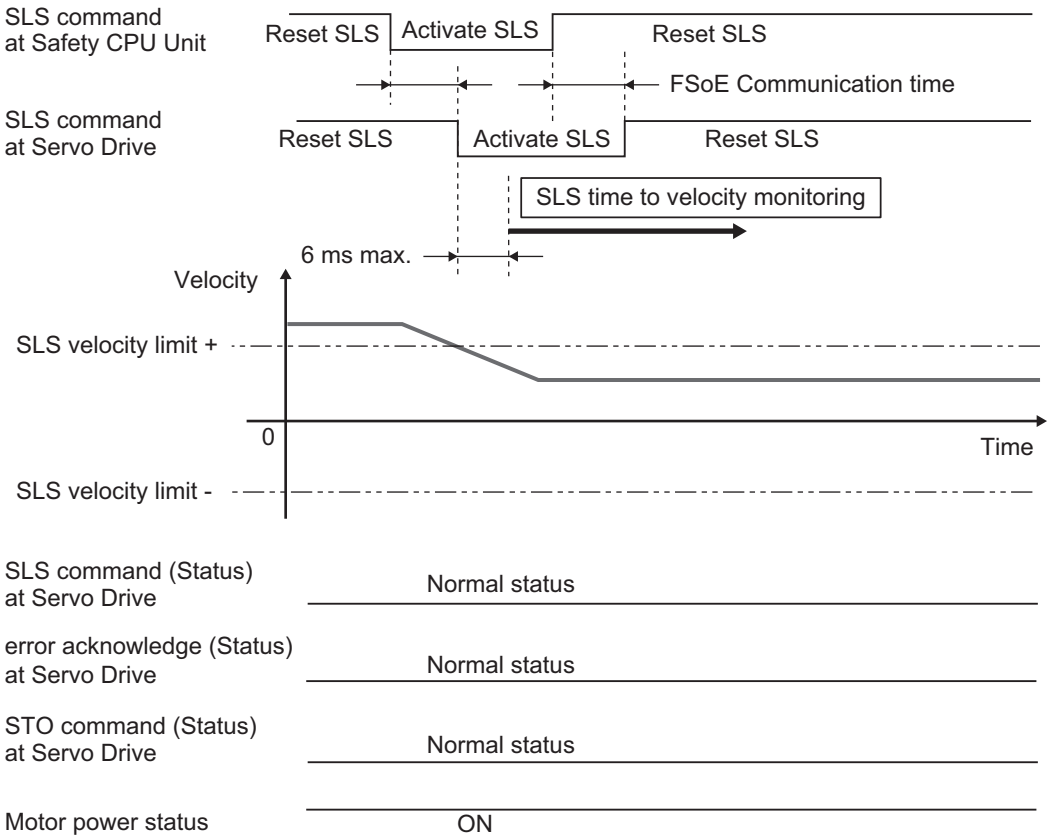

Operation Timing in Termination

This section describes timing when a Servo Drive terminates SLS function by a SLS command.

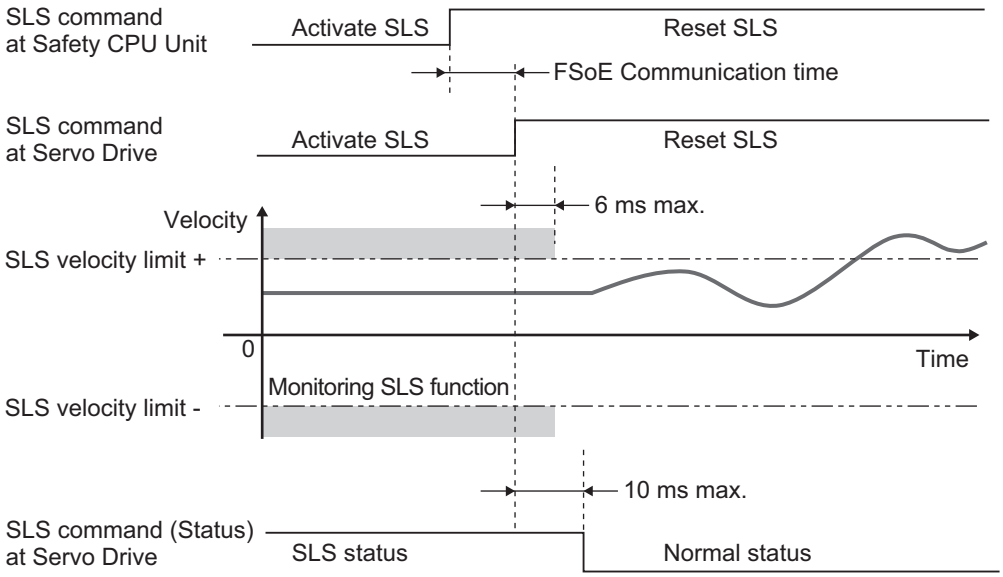

8-6-4 Example of Safety Program

This section gives an example of a program to use SLS function of Servo Drive from Safety CPU Unit.

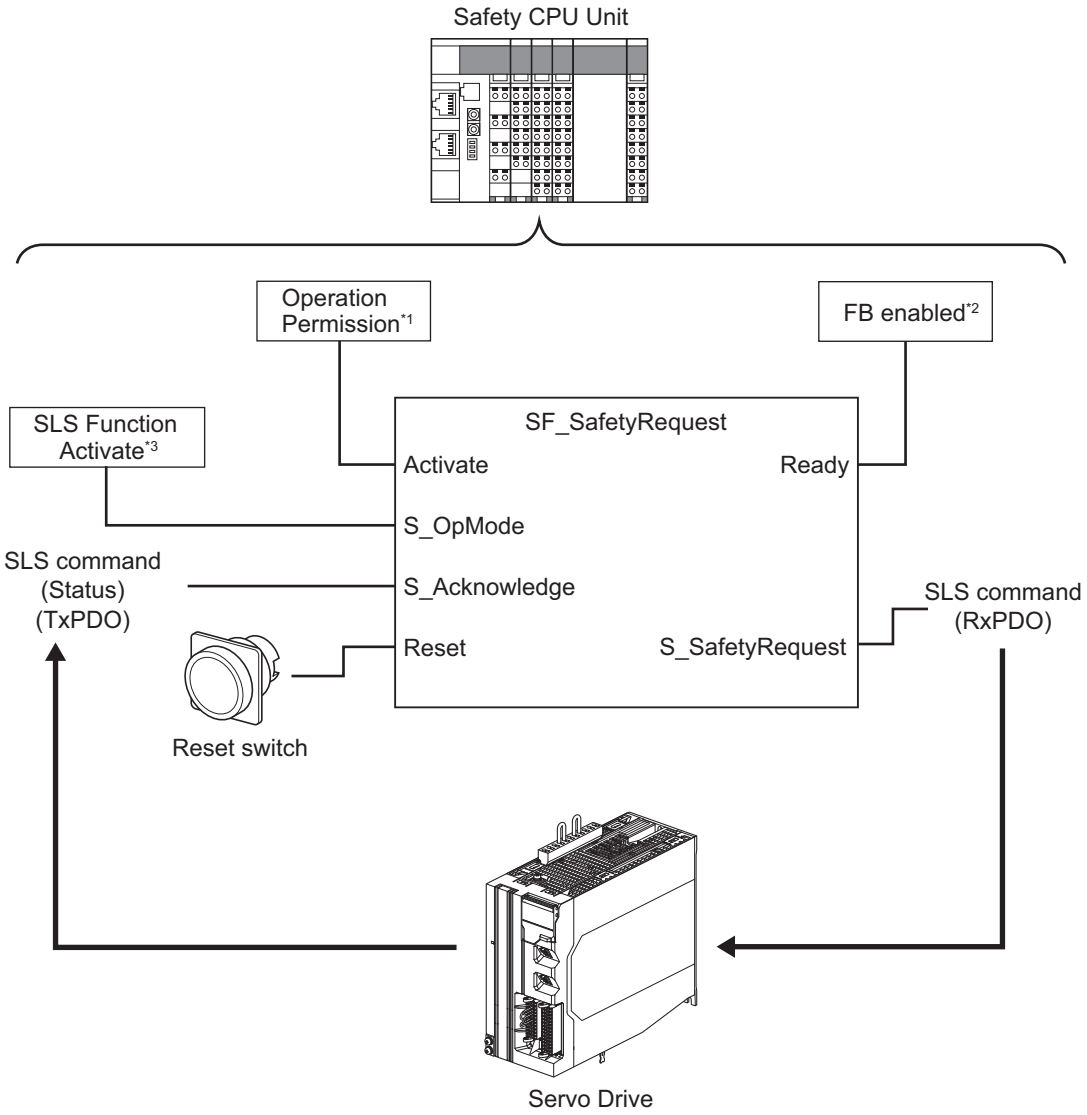

*1. When you input safety connection status, a safety controller can limit operations for function block according to status of a system or a program.

*2. It indicates that a function block can be activated. Also, it can be used as inputs of other function blocks and the programs.

*3. Input given SLS monitoring result for the system.

For details about function block “SF_SafetyRequest”, refer to the *Safety Control Unit Instructions Reference Manual* (Cat. No. Z931).

For an example of using SLS function, refer to *A-5-2 Monitoring Function* on page A-218.

8-7 Safely-limited Position (SLP) Function

This function is used to monitor a **Safety Present Position**. Commands from a safety controller activate SLP function, which start monitoring the position. Excessive Limit Value Error (Error No. 71.03) occurs when the **Safety Present Position** is out of the specified range while the monitoring.

It receives the commands from a safety controller via EtherCAT (FSoE) communications.

Be sure to set a safety origin position to use SLP function. Without the setting of a safety origin position, Safety Function Error (Error No. 71.02) occurs.

8-7-1 Configuration Example for SLP System

This section describes an example for system configuration to lock and manage a device setting area with a safety key selector switch in order to detect an operator that enters to the hazardous area.

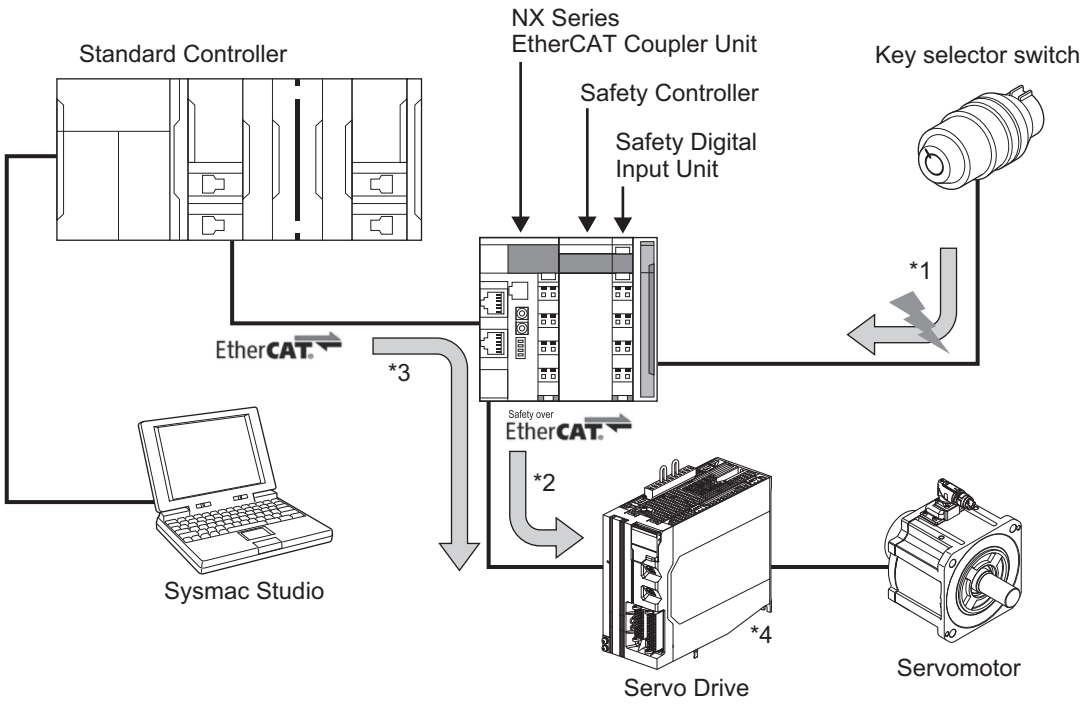

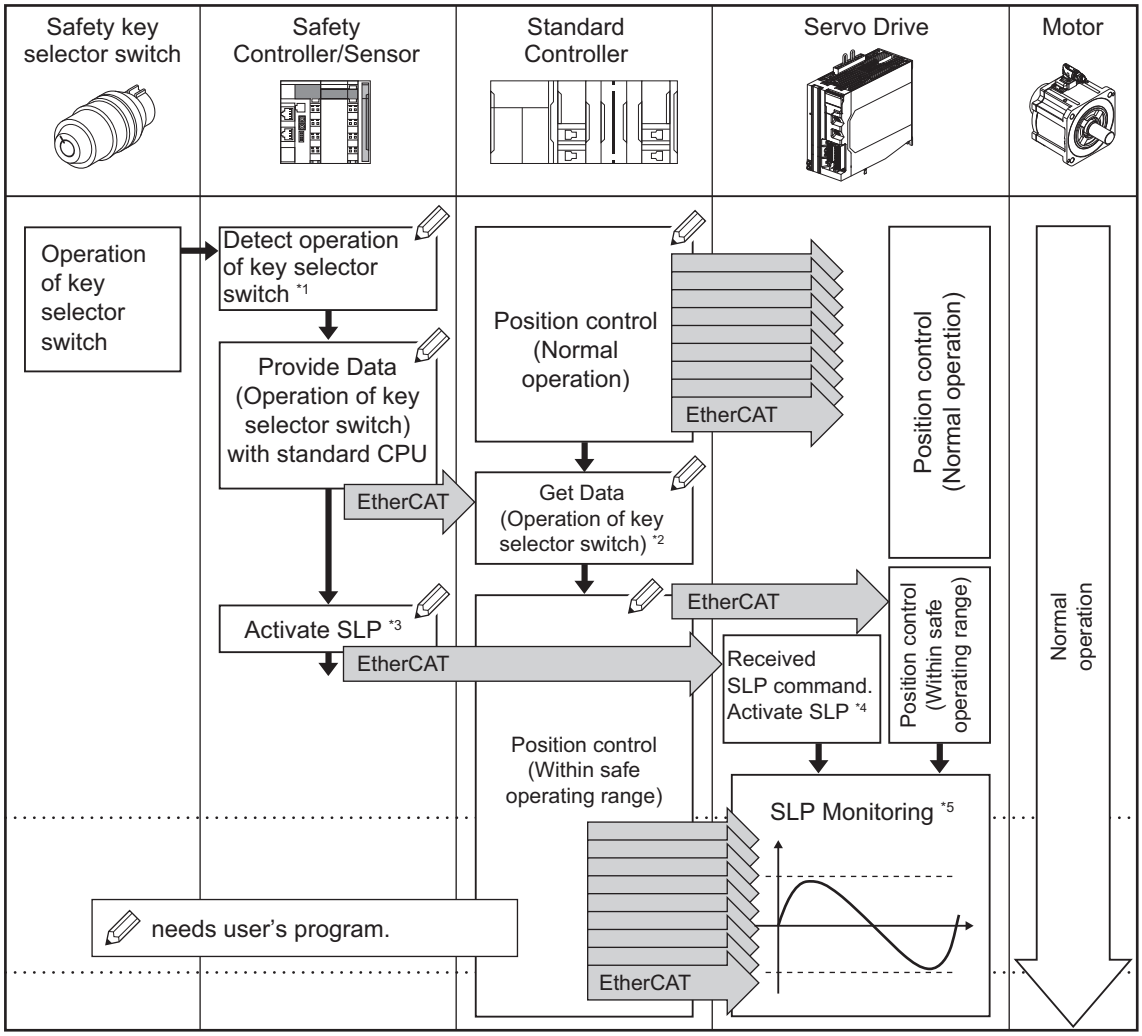

*1. Detects the key selector operation mode is switched by a safety controller.

*2. A standard controller reads data from the safety controller and check the operation mode was switched. In such case, it issues a command to enable a device to operate in a safe range and give the command to a Servo Drive.

*3. The safety controller issues a command to activate SLP to the Servo Drive.

*4. The Servo Drive receives the command to activate SLP from the safety controller and starts SLP monitoring.

*5. Also, the Servo Drive controls the motor's position in accordance with the command from the standard controller. It monitors that SLP function is activated and a motor operates safely within safe operating range.

Precautions for Correct Use

Safety programs for a safety controller shall be created and controlled to achieve controls mentioned earlier *1 and *3. In the same way, user's programs for a standard controller shall be created and controlled to achieve controls mentioned earlier *2.

These examples are some of control methods to configure safety system. Create and control appropriate programs according to user's equipment and systems.

8-7-2 Objects Requiring Settings

Index (hex)	Subindex (hex)	Name	Description		Reference
66A0	–	SLP command	Gives SLP function status and issues SLP command.		P. A-73
	01	SLP command 1	Gives SLP instance 1 status and issues SLP command.		
			Read	Gives SLP status. 0: Normal status 1: SLP status	
			Write	Issues SLP Command. 0: Activate SLP 1: Reset SLP	
	02	SLP command 2	The function is the same as 01 hex.		
	03	SLP command 3	The function is the same as 01 hex.		
	04	SLP command 4	The function is the same as 01 hex.		
	05	SLP command 5	The function is the same as 01 hex.		
	06	SLP command 6	The function is the same as 01 hex.		
	07	SLP command 7	The function is the same as 01 hex.		
	08	SLP command 8	The function is the same as 01 hex.		
66A2	–	SLP position upper limit	Sets monitoring upper limit position with SLP function. Sets the upper limit for each SLP command.		P. A-73
	01	SLP position upper limit 1	Sets SLP monitoring upper limit position to SLP command 1.		
	02	SLP position upper limit 2	The function is the same as 01 hex.		
	03	SLP position upper limit 3	The function is the same as 01 hex.		
	04	SLP position upper limit 4	The function is the same as 01 hex.		
	05	SLP position upper limit 5	The function is the same as 01 hex.		
	06	SLP position upper limit 6	The function is the same as 01 hex.		
	07	SLP position upper limit 7	The function is the same as 01 hex.		
	08	SLP position upper limit 8	The function is the same as 01 hex.		

Index (hex)	Subindex (hex)	Name	Description	Reference
66A4	–	SLP position lower limit	Sets monitoring lower limit with SLP function. Sets the lower limit for each SLP command.	P. A-74
	01	SLP position lower limit 1	Sets SLP monitoring lower limit position to SLP command 1.	
	02	SLP position lower limit 2	The function is the same as 01 hex.	
	03	SLP position lower limit 3	The function is the same as 01 hex.	
	04	SLP position lower limit 4	The function is the same as 01 hex.	
	05	SLP position lower limit 5	The function is the same as 01 hex.	
	06	SLP position lower limit 6	The function is the same as 01 hex.	
	07	SLP position lower limit 7	The function is the same as 01 hex.	
	08	SLP position lower limit 8	The function is the same as 01 hex.	
4F00	–	Safety Origin Position Setting	Sets the detection of safety origin position.	P. 9-132
	01	Safety Origin Position Determination Method	Selects method for Safety 0riginal Position Determination. The specified operation of setting value 1 or 2 means reciprocating operation within one rotation. 0: SOPT1 and SOPT2 Input To determine the origin position, use two sensors or switches (hereinafter called as SOPT input devices). Fix the middle position of the installation positions for the two SOPT input devices as safety origin position. 1: [Only specified operation] Safety Origin Position Offset The value set to **Safety Origin Position Offset** (4F00-04 hex) is a safety origin position. Set any motor's position in a rotation. 2: [Only specified operation] Safety Origin Position Offset and SOPT1 Input Set an installation position of SOPT1 input device to **Safety Origin Position Offset** (4F00-04 hex) in order to fix safety origin position. Set any motor's position in a rotation.	

Index (hex)	Subindex (hex)	Name	Description	Reference
4F00	02	Test Pulse Diagnosis	Sets the test pulse diagnosis whether or not the test pulse is output from test output ports at certain intervals. bit0: TO1 output terminal 0: Test pulse diagnosis is not enable 1: Test pulse diagnosis is enable bit1: TO2 output terminal 0: Test pulse diagnosis is not enable 1: Test pulse diagnosis is enable	P. 9-132
	03	SOPT Input Terminal Setting	Sets the logic of the input device connected to the SOPT input terminals. bit0: SOPT1 input terminal 0: Positive logic 1: Negative logic bit1: SOPT2 Input terminal 0: Positive logic 1: Negative logic	
	04	Safety Origin Position Offset	Sets the offset value in the encoder origin position and the safety origin position by Encoder unit. The setting value is the safety origin position. In a case **Safety Origin Position Determination Method** (4F00-01 hex) = 1: [Only specified operation] Safety Origin Position Offset, 2: [Only specified operation] Safety Origin Position Offset and SOPT1 Input, this setting is required.	
	05	Discrepancy Distance	Sets the distance between the input devices of SOPT1 and 2. It is necessary when you determine the safety origin position, using input of SOPT1 and 2. In the setting, read the dual channel monitoring distance monitor. If -1 is set, the dual channel monitoring function is disable, and the safety origin position cannot be determined. Use it when measuring discrepancy distance.	
	06	Safety Origin Position Tolerance	Sets tolerance detection range for SOPT1 and 2. You can confirm safety origin position with **Safety Origin Position Determination Method** (4F00-01 hex) is set to 0: SOPT1 and SOPT2 Input, or is set to 2: [Only specified operation] Safety Origin Position Offset and SOPT1 Input.	

Precautions for Correct Use

- Set a multiple number of 128 to the setting value of **SLP position upper limit - SLP position upper limit 1** to **SLP position upper limit 8** (66A2-01 hex to 08 hex). If you set other number, the setting value is automatically corrected to the multiple number of 128 which does not exceed the setting value. Example: When the setting value is between 256 and 383, 256 is automatically set to the setting value for the operation; when the setting value is between 1 and 127, 0 is automatically set to the setting value for the operation.
- Set a multiple number of 128 to the setting value of **SLP position lower limit - SLP position lower limit 1** to **SLP position lower limit 8** (66A4-01 hex to 08 hex). If you set other number, the setting value is automatically corrected to the lowest multiple number of 128 which exceeds the setting value. Example: When the setting value is between 257 and 384, 384 is automatically set to the setting value for the operation; when the setting value is between -127 and -1, 0 is automatically set to the setting value for the operation.

8-7-3 Operation Procedure

This section describes how to use the SLP function.

1 Assign SLP function to safety PDO.

Assign instances from **SLP command** - **SLP command 1** to **SLP command 8** (66A0-01 hex to 08 hex) into safety PDO.

As for the details, refer to *8-1-4 Operating Procedure for Safety Function* on page 8-8 in *8-1 Outline of Safety Functions* on page 8-3.

2 Set safety origin position.

The settings vary in **Safety Origin Position Determination Method** (4F00-01 hex) for use. As for the details, refer to *8-7-6 Setting of Safety Origin Position* on page 8-89.

3 Set monitoring limits.

- Set upper limit values of safety monitoring position to instances of **SLP position upper limit - SLP position upper limit 1** to **SLP position upper limit 8** (66A2-01 hex to 08 hex).
- Set lower limit values of safety monitoring position to instances of **SLP position lower limit - SLP position lower limit 1** to **SLP position lower limit 8** (66A4-01 hex to 08 hex).

4 Activate SLP function.

SLP function starts monitoring of a safety position when SLP command assigned to safety PDO is set to *0* (Activate SLP) from a safety controller.

8-7-4 Operation Timing

This section describes operation timing for SLP function.

Operation Timing in Start

When you set SLP command assigned to Safety PDO to *0* (Activate SLP), a Servo Drive starts a monitoring of Safety Present Position.

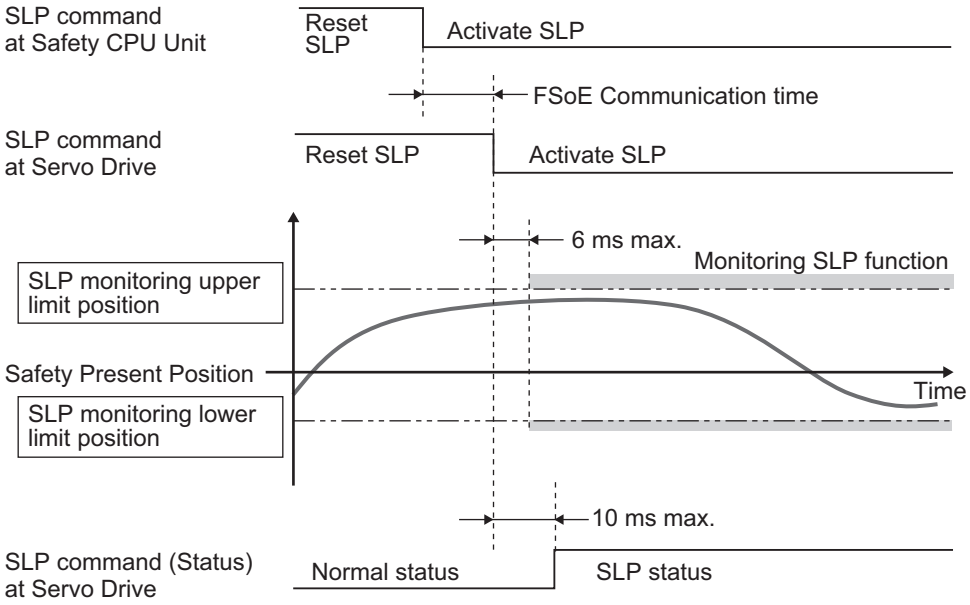

Operation Timing in Error Detection

This section describes when an error occurs and STO function is activated after Safety Present Position exceeds a monitoring range.

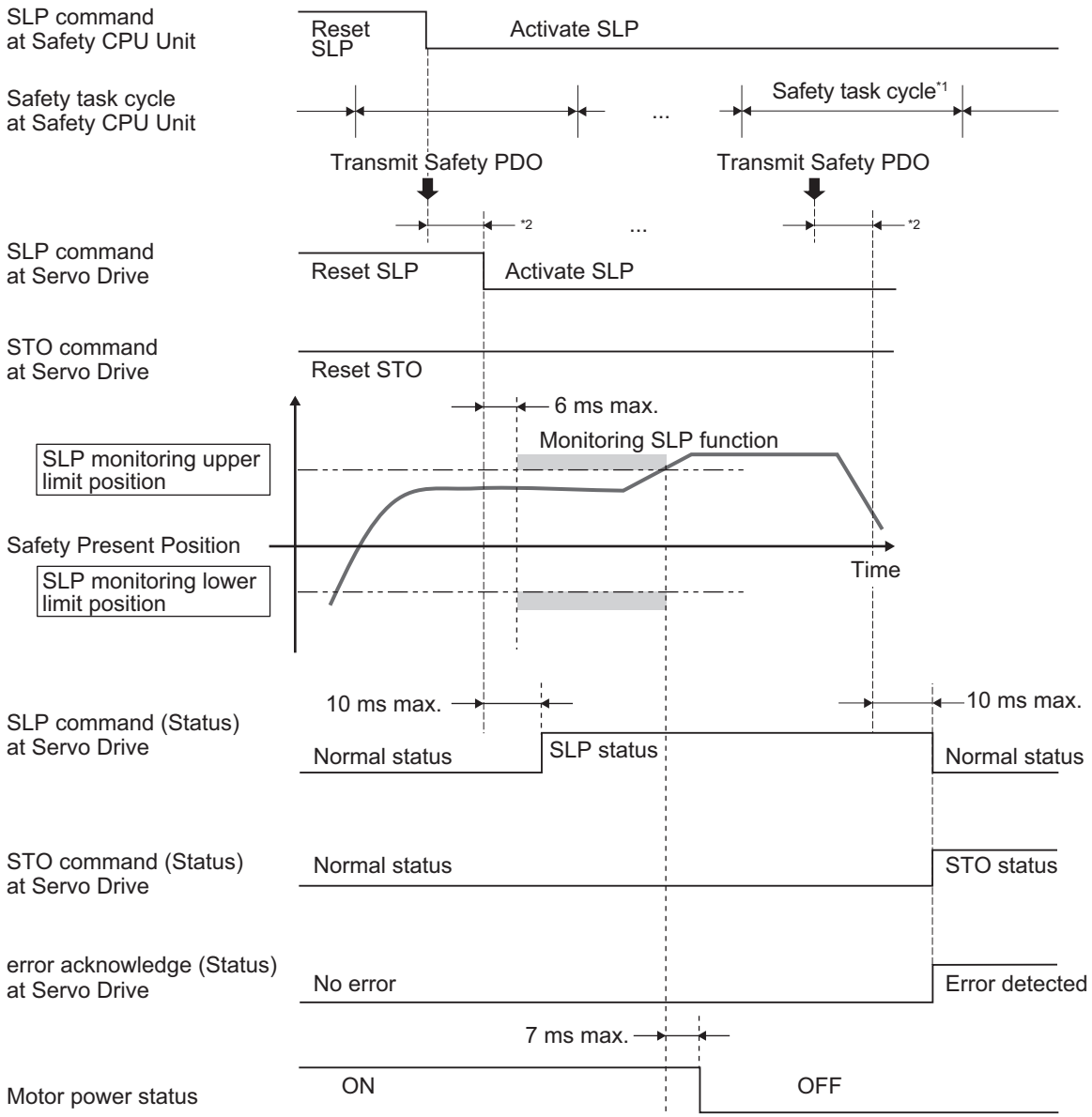

*1. As for safety task cycle, refer to *NX-series Safety Control Units User's Manual* (Cat. No. Z930).

*2. FSoE Communication Time.

When several SLP functions are activated, a Servo Drive monitors several SLP monitoring ranges. When Safety Present Position is out of the SLP monitoring range, Excessive Limit Value Error (Error No. 71.03) occurs and the Servo Drive goes into the STO status.

When you reset Excessive Limit Value Error, take the following measures in advance.

- Return the Safety Present Position within SLP monitoring range.
- Set SLP command to *1* (Reset SLP).

As for a procedure for error reset, refer to *8-1-10 Procedure for Reset of Safety Error* on page 8-20.

Operation Timing in Termination

This section describes a timing at which a Servo Drive terminates SLP function by a SLP command.

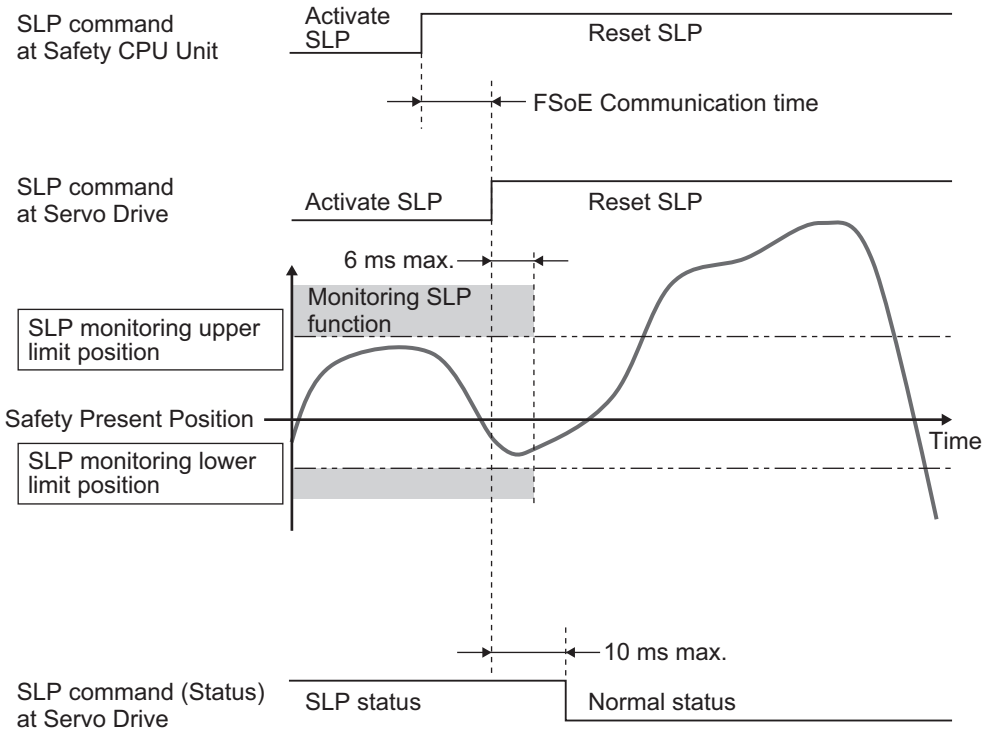

8-7-5 Example of Safety Program

This section gives an example of a program to SLP function of Servo Drive from Safety controller.

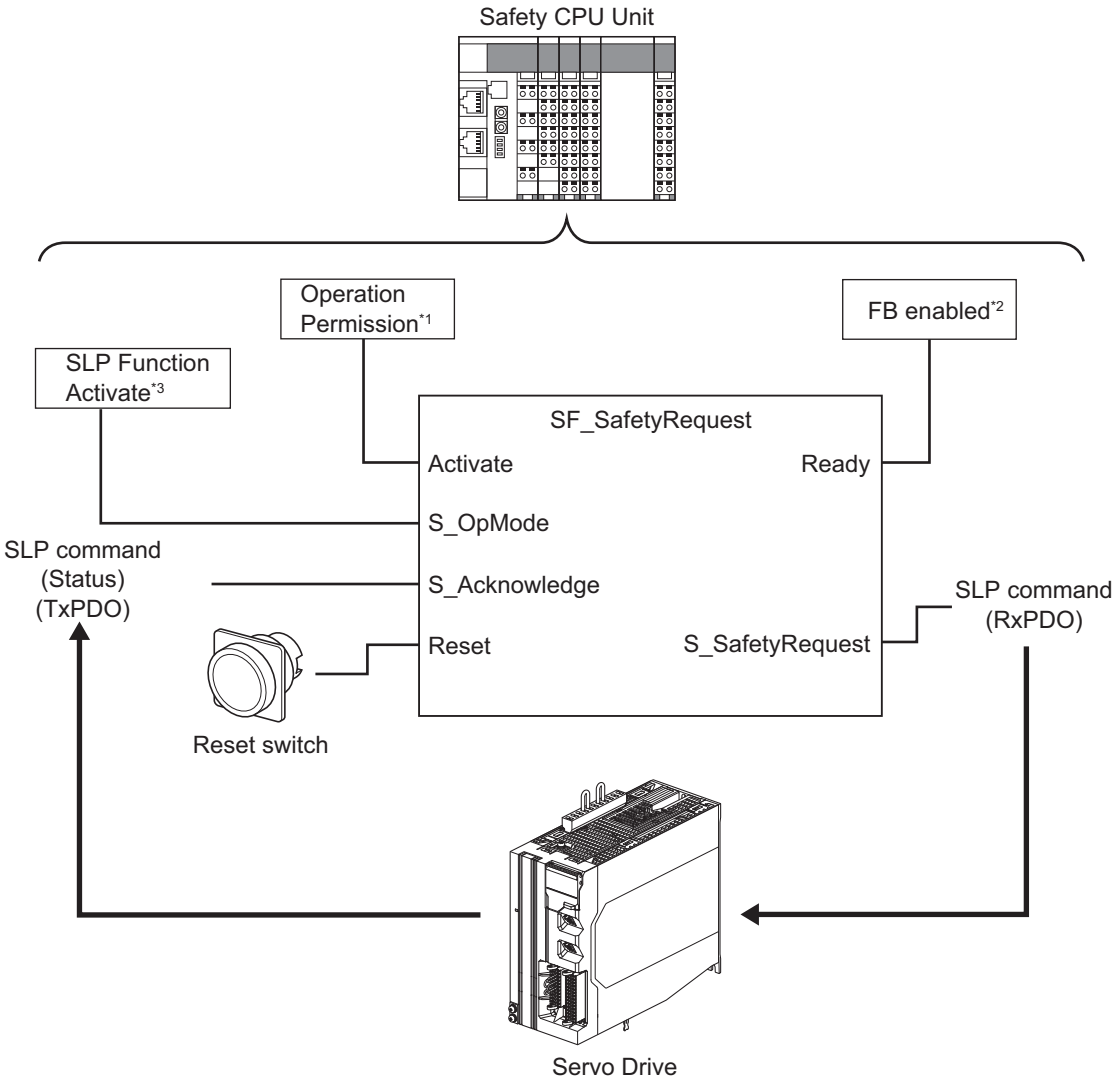

*1. When you input safety connection status, a safety controller can limit operations for function block according to status of a system or a program.

*2. It indicates that a function block can be activated. Also, it can be used as inputs of other function blocks and the programs.

*3. Input the given SLP monitoring result for the system.

For details about function block SF_SafetyRequest, refer to the *Safety Control Unit Command Reference Manual* (Cat. No. Z931).

8-7-6 Setting of Safety Origin Position

Safety origin position is a basic position for SLP monitoring, where **Safety Present Position** is Zero.

This section describes how to set the safety origin position. Select appropriate methods according to SIL (Safety Integrity Level) and PL (Performance Level) that is achieved by a user's device.

Safety Origin Position Determination Method (4F00-01 hex)	Application		The maximum achievable SIL level
	General-purpose application	Application which controls the motor per a rotation	
0: SOPT1 and SOPT2 Input	Available		SIL3/PLe
1: [Only specified operation] Safety Origin Position Offset	Unavailable	Available	SIL2/PLd
2: [Only specified operation] Safety Origin Position Offset and SOPT1 Input		Available	SIL3/PLe

Precautions for Correct Use

- Do not set "*1* [Only specified operation] Safety Origin Position Offset" or "*2* [Only specified operation] Safety Origin Position Offset and SOPT1 Input" to **Safety Origin Position Determination Method** (4F00-01 hex) for use of other than applications reciprocating operation within one rotation.
  Malfunction, equipment damage or injury may result.
- When SLP is activated without setting safety origin position, Safety Function Error (Error No. 71.02) occurs.

Safety Origin Position Determination Method (4F00-01 hex) = 0: SOPT1 and SOPT2 Input

To determine a safety origin position, use two SOPT input devices and fix the middle position between installation positions for the two SOPT input devices as safety origin position.

In this method, control a work to pass installations position of the SOPT input devices at constant velocity and fix the safety origin position.

During determining the safety origin position, a dual channel monitoring function is activated to detect miss-alignment of the SOPT input devices. An installation distance between SOPT input devices must be set accurately.

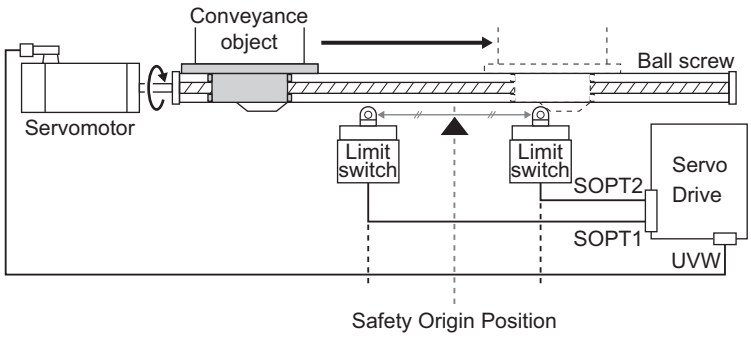

● Procedure for Safety Origin Position Determination

Control a work to pass an installation position of SOPT input devices between SOPT 1 Input and SOPT 2 Input at constant velocity. At this time, secure 10 ms or longer for work to pass SOPT1 input device and SOPT2 input device.

Determine each intermediate position of the input signal widths while a work is passing through SOPT1 and SOPT2 input devices, and the intermediate position between each intermediate position mentioned earlier shall be fixed as a safety origin position. Control a work to pass through the SOPT1 and SOPT2 input devices at constant velocity and 5 r/min or more. Also, it is recommended that the velocity is 200 r/min or less. *1

The slower the velocity is, the less gap the safety original position has. Set the velocity slower than the present passing one when SOPT Input Monitoring Error (Error No. 71.01) occurs while a work is passing through an installation position of SOPT input devices.

*1. Convert the motor's rotation velocity [r/min] to an unit of linear actuators when you use the actuator such as bowl screws.

Ex. When a bowl screw with its lead of 10 mm is used

Minimum velocity: 5 r/min ÷ 60 × 10 mm = 0.83 mm/s (Set the velocity to 0.83 mm/s or more.)

Maximum velocity: 200 r/min ÷ 60 × 10 mm = 33.33 mm/s (Set the velocity to 33.33 mm/s or less.)

Case where SOPT input devices are installed separately

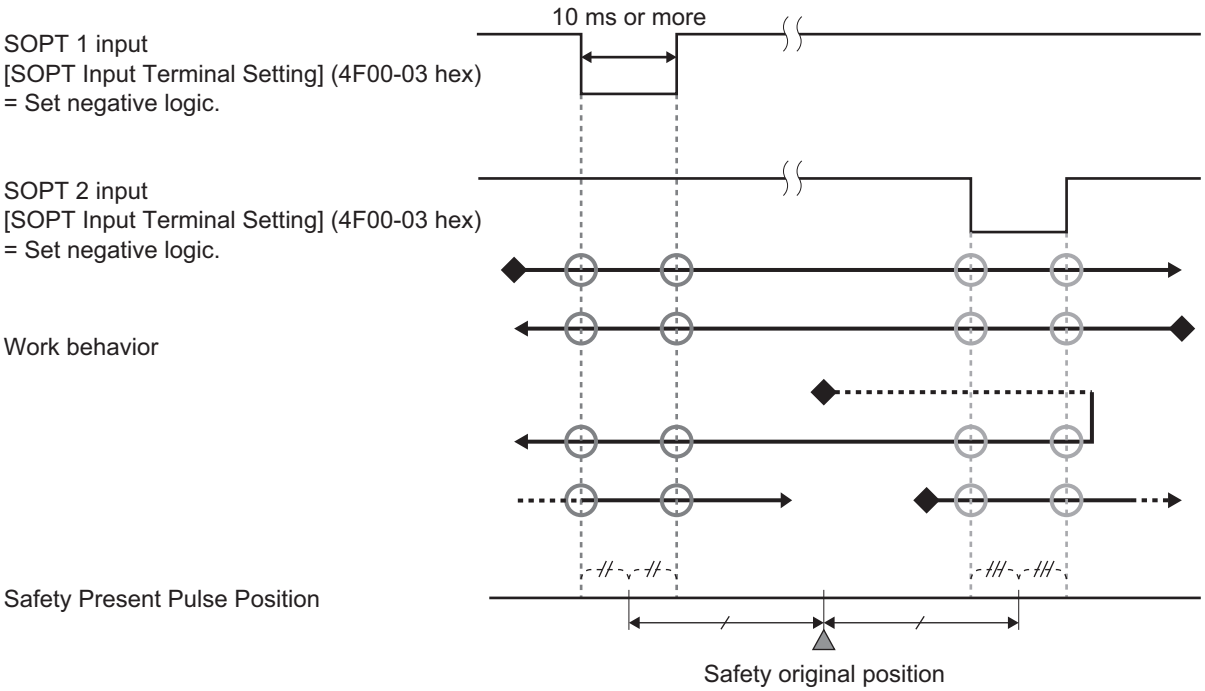

◆: Initial position in a state of safety origin position undetermined

○: Acquisition point where position information of SOPT Input

Case where SOPT input devices are installed closely

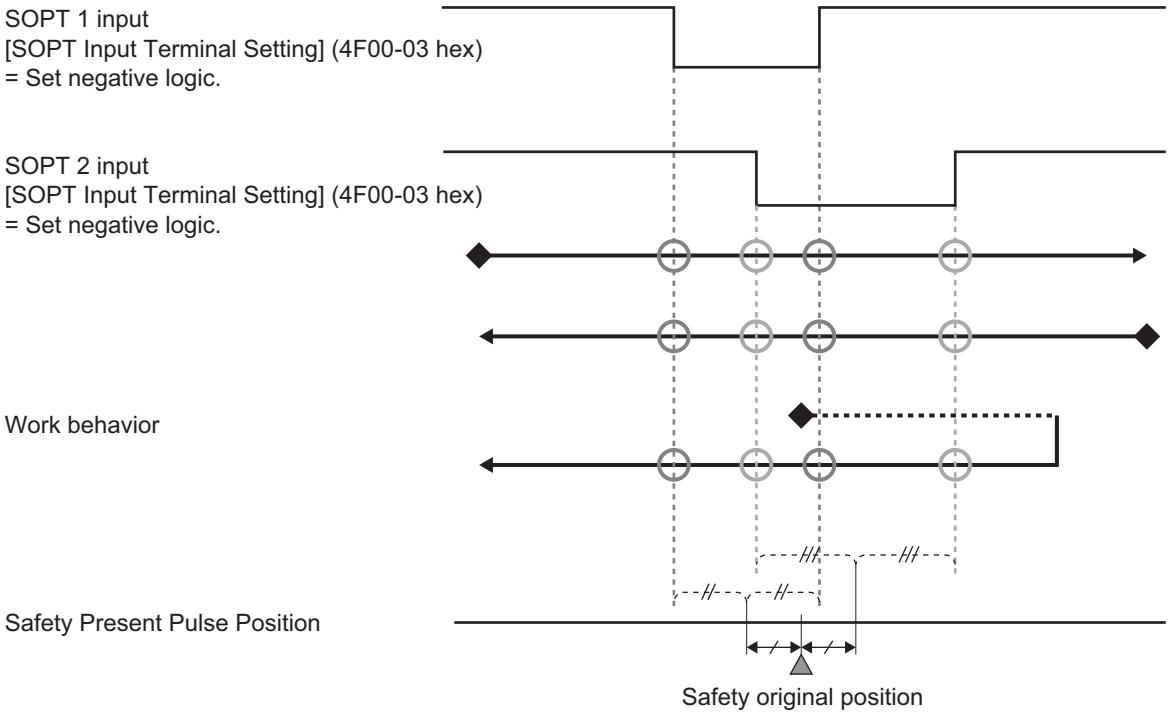

◆: Initial position in a state of safety origin position undetermined

○: Acquisition point where position information of SOPT Input

In the following cases, the safety origin position cannot be fixed or the position is not determined properly.

Be sure to fix the safety origin position with a work behavior shown above.

- A work starts or closes a behavior of safety origin position determination with a signal of SOPT input devices ON.
- A work stops while it is passing SOPT input devices.
- The velocity or width of a work is set so that the signal width of SOPT input device is 10 ms or less.
- A work accelerates while it is passing SOPT input device.

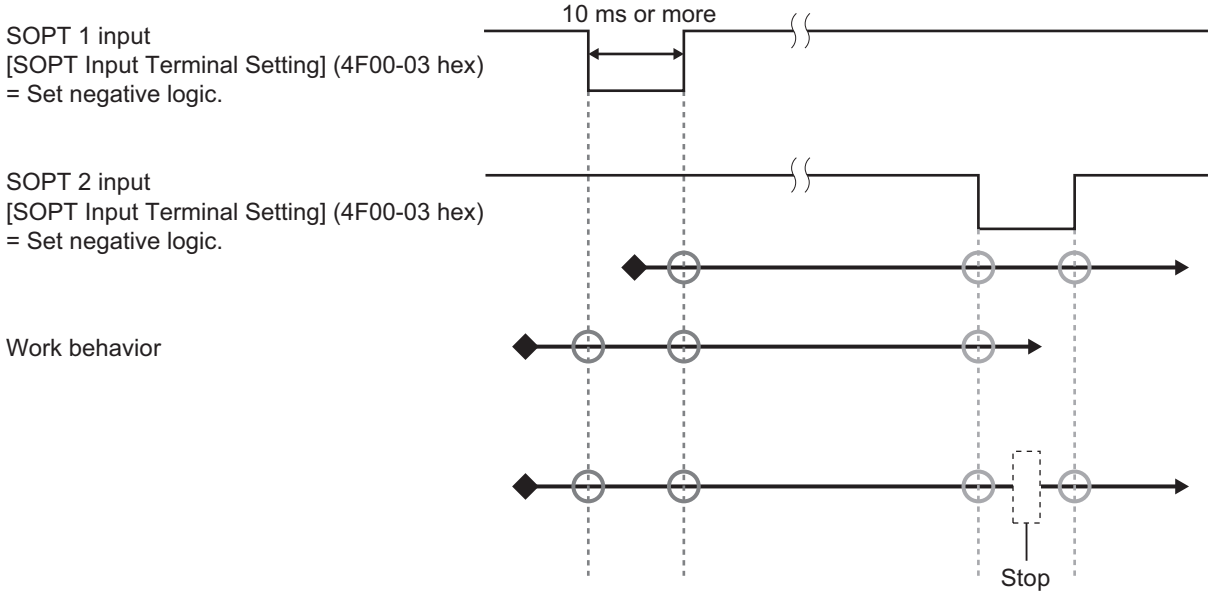

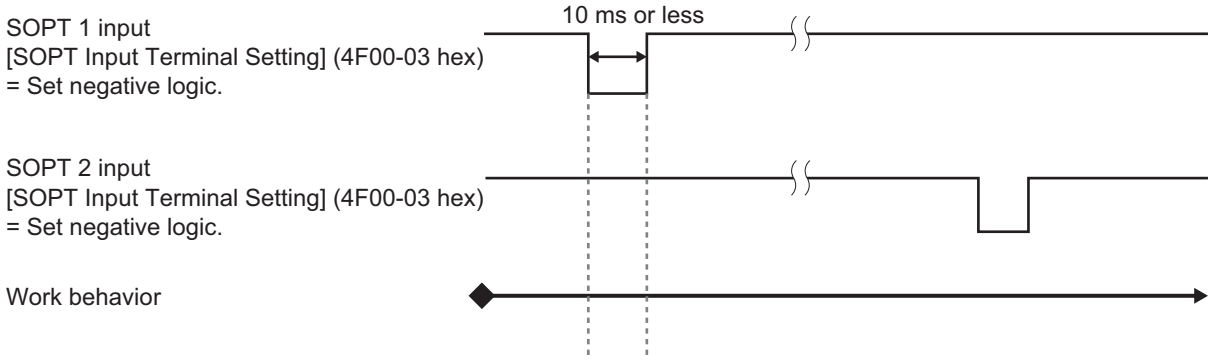

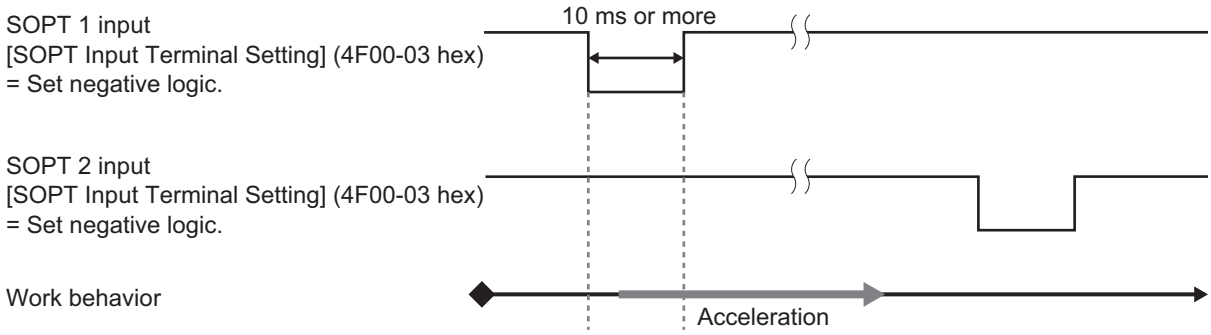

Dual Channel Monitoring Function

This function monitors the distance of the SOPT input devices to detect a misalignment of the safety original position. When the safety origin position is fixed, the function is activated.

When the misalignment of it is detected, SOPT Input Monitoring Error (Error No. 71.01) occurs.

Set an installation distance of SOPT input devices to **Discrepancy Distance** (4F00-05 hex) to activate dual channel monitoring function. To set the tolerance of safety origin position, set **Safety Origin Position Tolerance** (4F00-06 hex). Default setting of **Discrepancy Distance** is *-1*, safety origin position cannot be fixed by the default setting. Be sure to set safety origin position after setting **Discrepancy Distance**.

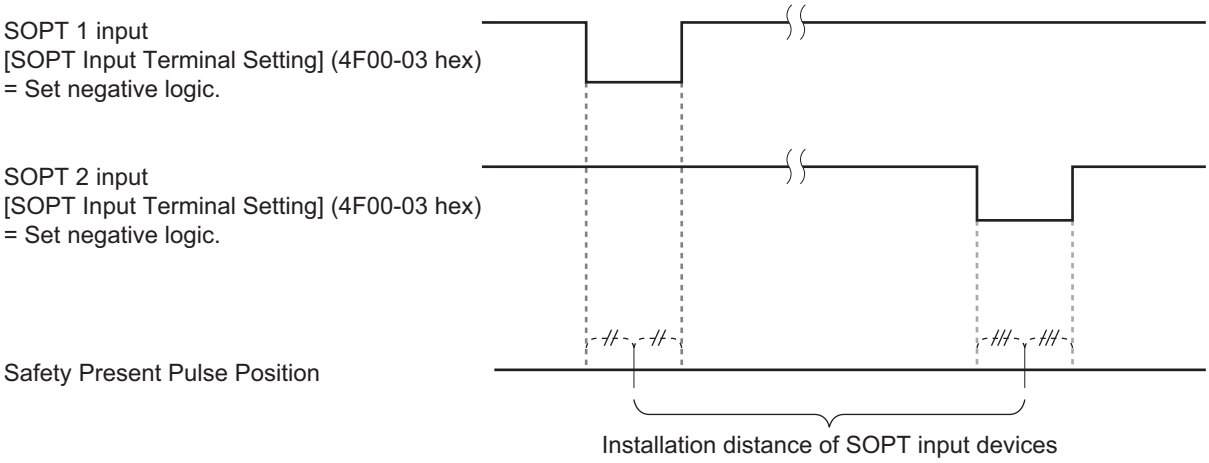

Procedure for Measurement of Installation Distance of SOPT Input Devices

At first set **Discrepancy Distance** (4F00-05 hex) to *-1*. Then set **Re-measurement of Discrepancy Distance Monitoring** (4F02-F1 hex) to let a work carry out the behavior of safety origin position determination shown in *Procedure for Safety Origin Position Determination* on page 8-90.

After the safety origin position determination procedure, once **Discrepancy Distance Monitor** (4F02-82 hex) is set, an installation distance of the SOPT Input devices can be read. Set the value to **Discrepancy Distance** (4F00-05 hex), after confirming the validity of the value.

Precautions for Correct Use

If **Discrepancy Distance** (4F00-05 hex) is not set to *-1*, you cannot carry out **Re-measurement of Discrepancy Distance Monitoring** (4F00-F1 hex).

SLP function can be activated, after setting **Discrepancy Distance** and determining a safety origin position in advance.

Setting of Safety Origin Position Tolerance

Set a maximum tolerance value of SOPT input devices. The maximum value refers to the value added each maximum detected tolerance for SOPT1 input device and SOPT2 input device. The detected tolerance is calculated from several actual values or the characteristics values of SOPT input devices. Error does not occur even when a safety origin position deviates within the set Safety Origin Position Tolerance.

In the following condition, the dual channel monitoring function detects SOPT Input Monitoring Error (Error No. 71.01).

Absolute value of | Distance between the SOPT input devices - Discrepancy Distance | > Safety Origin Position Tolerance

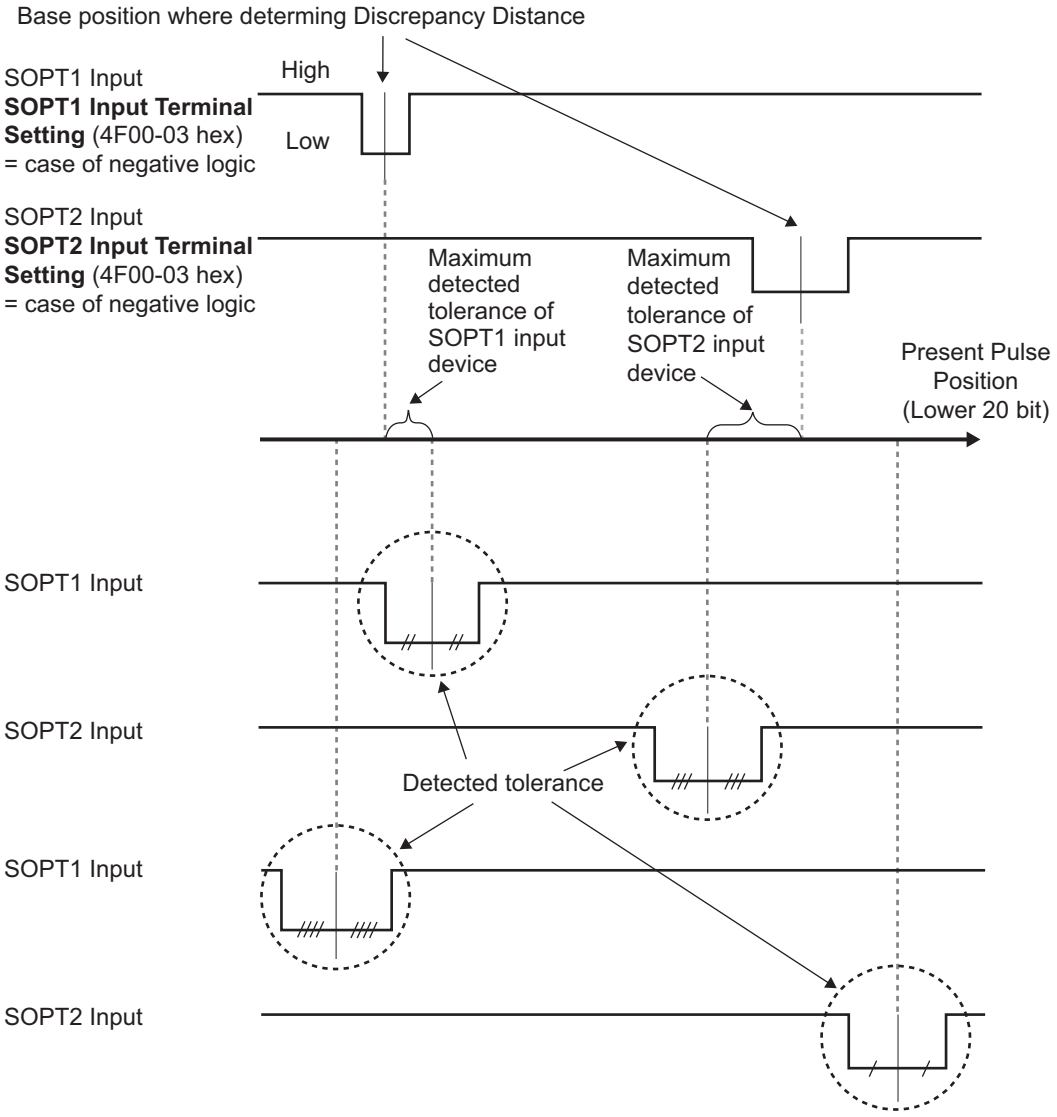

Precautions for Correct Use

Set the maximum tolerance value of SOPT input devices under verification that you can secure the device safety even when the safety origin position deviates within the set Safety Origin Position Tolerance. Select SOPT input devices again if the setting value is not fulfilled.

Procedure for Setting of Safety Origin Position

Carry out the following settings and check operation in accordance with *1-7 Procedures to Start Operation* on page 1-25.

1 Select SOPT Input devices that is connected to SOPT 1 Input and SOPT 2 Input.

2 Set the following safety parameters.

Safety Origin Position Determination Method (4F00-01 hex)

Test Pulse Diagnosis (4F00-02 hex)

SOPT Input Terminal Setting (4F00-03 hex)

3 Install the SOPT Input devices selected mentioned earlier 1. Also, wire SOPT1 Input and SOPT2 Input.

4 Check an input from SOPT Input devices installed mentioned earlier 3.

5 Make an operation of safety origin position determination to measure correctly the installation distance between input devices for SOPT1 and SOPT2 with **Discrepancy Distance Measurement - Status** (4F02-81 hex), **Discrepancy Distance Monitor** (4F02-82 hex) and **Re-measurement of Discrepancy Distance** (4F02-F1 hex). Set the distance to **Safety Origin Position Setting - Discrepancy Distance** (4F00-05 hex) after checking the distance is valid. Set **Safety Origin Position Tolerance** (4F00-06 hex).

6 Carry out “Procedures to Start Operation: STEP 10-1” again and transfer the safety parameters mentioned earlier 5. to a standard controller and a safety controller.

7 Follow “Procedures to Start Operation: STEP 10-2” to check that a safety origin position is firmly determined.

8 Set a window for monitoring in SLP function.

As for the procedure for use of SLP function, refer to *8-7-3 Operation Procedure* on page 8-84.

Additional Information

Each procedure is applicable to the following step shown in *1-7 Procedures to Start Operation* on page 1-25.

Step	Procedures to Start Operation
1	STEP 3 Software and hardware design for safety control
2	STEP 6 Software setting and programming for safety control
3	STEP 8 Mounting and wiring
4 to 7	STEP 10-2 Check operation with actual machine

Condition of Undetermined Origin Position

- When a Servo Drive is restarted.
- When an object of **Safety Origin Position Setting** (4F00 hex) is changed.
- When parameters for safety functions are changed.

Safety Origin Position Determination Method (4F00-01 hex) = 1: [Only specified operation] Safety Origin Position Offset

A safety origin position is a value set to **Safety Origin Position Setting - Safety Origin Position Offset** (4F00-04 hex). Set any of a position in motor one-rotation.

In this method, a safety origin position determination and a SOPT input device is not required. Once FSoE communication is established, a safety origin position is set.

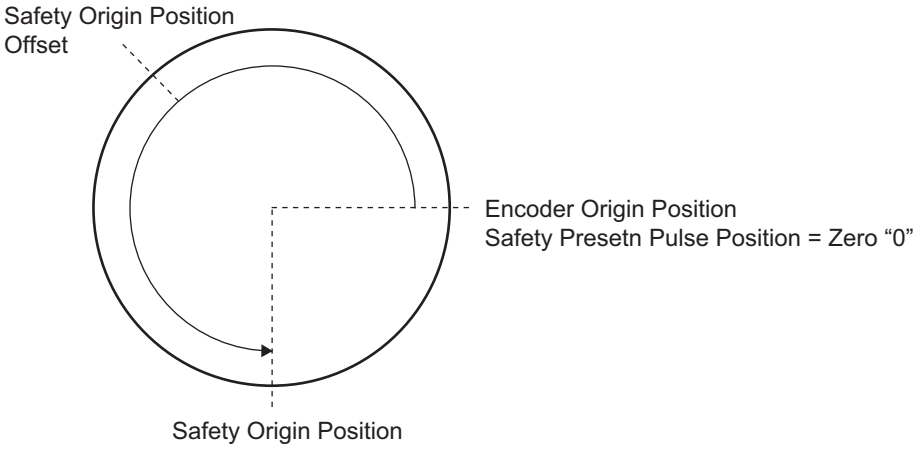

Procedure for Setting of Safety Origin Position

Carry out the following settings and check operation in accordance with *1-7 Procedures to Start Operation* on page 1-25.

1. Set **Safety Origin Position Determination Method** (4F00-01 hex).
2. Move a work to a position to be set as a safety origin position.
3. Read **Encoder** - **One-rotation Data** (4510-84 hex), validate it and set it to **Safety Origin Position Setting - Safety Origin Position Offset** (4F00-04 hex).
4. Carry out “Procedures to Start Operation: STEP 10-1” again and transmit the safety parameters mentioned earlier 3. to a standard controller and a safety controller.
5. Follow “Procedures to Start Operation: STEP 10-2 Checking operation with actual machine” to check that a safety origin position is firmly determined.
6. Set SLP monitoring limits.

   As for the procedure for use of SLP function, refer to *8-7-3 Operation Procedure* on page 8-84.

Additional Information

Each procedure is applicable to the following step shown in *1-7 Procedures to Start Operation* on page 1-25.

Step	Procedures to Start Operation
1	STEP 6 Software setting and programming for safety control
2 to 5	STEP 10-2 Check operation with actual machine

Condition of Undetermined Origin Position

- When FSoE communication is not established.
- When **Re-measurement of Discrepancy Distance** is carried out.
- When parameters for safety functions are changed.

Safety Origin Position Determination Method (4F00-01 hex) = 2: [Only specified operation] Safety Origin Position Offset and SOPT1 Input

Set an installation position of SOPT 1 input device to **Safety Origin Position Setting - Safety Origin Position Offset** (4F00-04 hex) to fix a safety origin position. Set the position in motor one-rotation.

In this method, check a misalignment between the installation position of SOPT input device and the position that is set to **Safety Origin Position Offset** (4F00-04 hex).

● Procedure for Safety Origin Position Determination

Control a work so that it passes through SOPT1 input device at a constant velocity. At this time, secure 10 ms or more as the passing time through SOPT1 input device.

Set the middle position of input signal width of the SOPT1 input device to a safety origin position, and check it, compared with the position of **Safety Origin Position Offset** (4F00-04 hex). With a gap between both positions within ± **Safety Origin Position Tolerance**, fix the middle position to a safety origin position.

Set the velocity of work passing through SOPT1 to a constant velocity or 5 r/min or more. 200 r/min or less is recommended.

The slower the velocity is, the less gap the safety origin position has.

With a gap between both positions over ± S**afety Origin Position Tolerance**, SOPT Input Monitoring Error (Error No. 71.01) occurs, and do not fix the middle position as a safety origin position.

For **Safety Origin Position Tolerance**, refer to *Setting of Safety Origin Position Tolerance* on page 8-94 in Safety Origin Position Determination Method = “0: SOPT1 and SOPT2 Input”.

Safety Origin Position at an installation position of SOPT Input Device

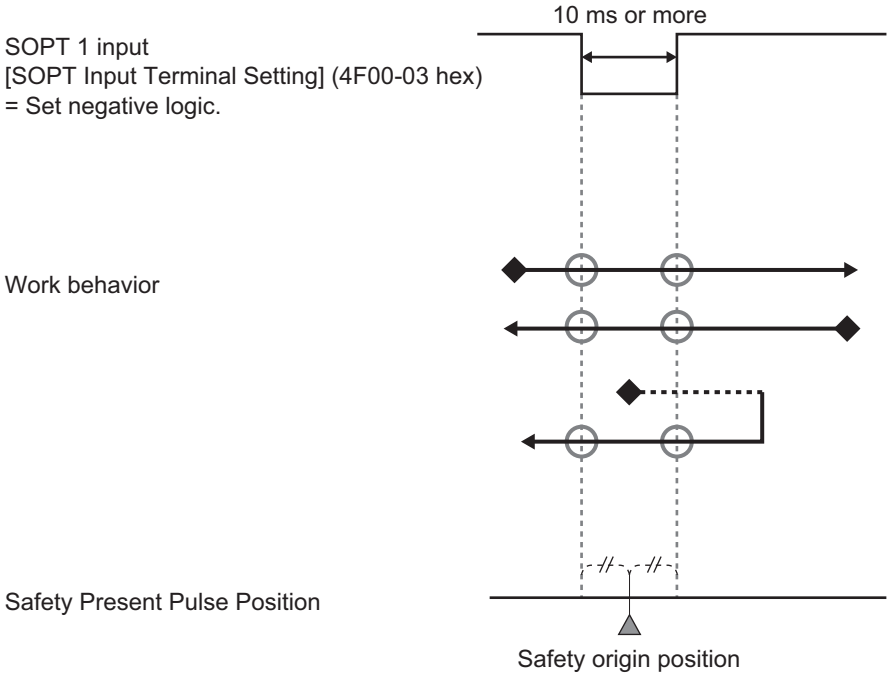

◆: Initial position in a state of safety origin position undetermined

○: Acquisition point where position information of SOPT Input

In the following cases, the safety origin position cannot be fixed or the position is not determined properly.

Be sure to fix the safety origin position with a work behavior shown above.

- A work starts or closes a behavior of safety origin position determination with a signal of SOPT input device ON
- A work stops while it is passing SOPT input devices.
- The velocity or width of a work is set so that the signal width of SOPT input device is 10 ms or less.
- A work accelerates while it is passing SOPT input device.

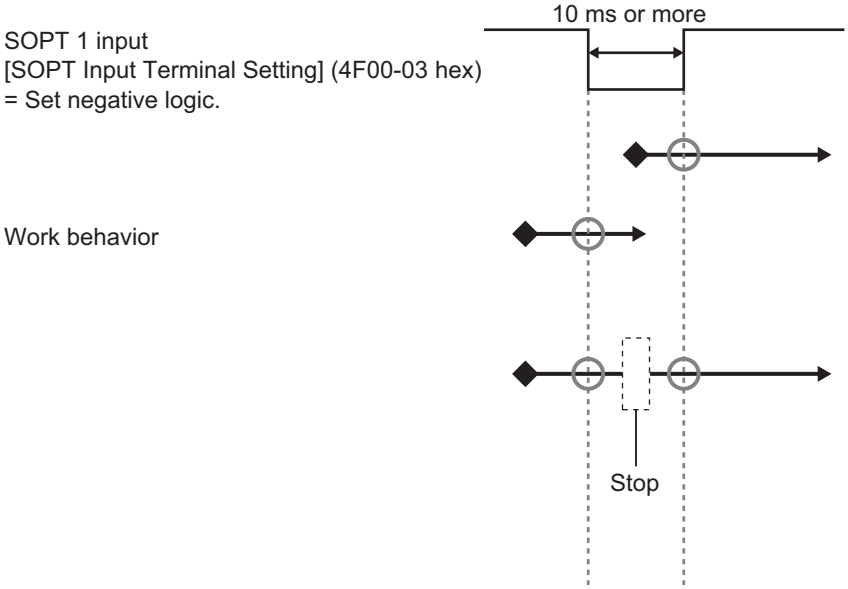

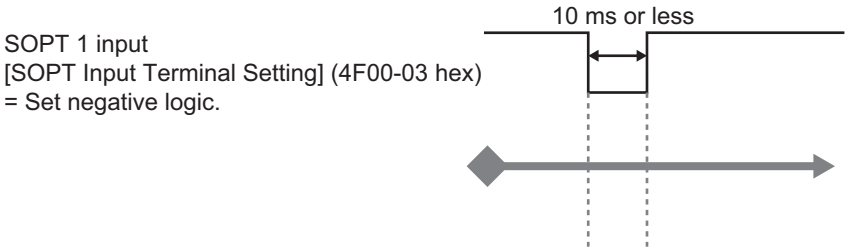

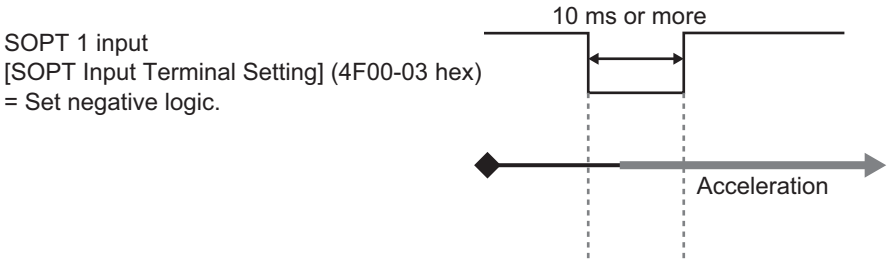

● Procedure for Safety Origin Position Setting

Carry out the following settings and check operation in accordance with *1-7 Procedures to Start Operation* on page 1-25.

1 Select a SOPT Input device that is connected to SOPT 1 Input.

2 Set the following safety parameters.

Safety Origin Position Determination Method (4F00-01 hex)

Test Pulse Diagnosis (4F00-02 hex)*1

SOPT Input Terminal Setting (4F00-03 hex)

3 Install the SOPT Input device selected mentioned earlier 1. Also, wire SOPT1 Input.

4 Check an input from SOPT Input device installed mentioned earlier 3.

5 Move a work to a position where a signal of SOPT Input device is input. Read the parameter **Encoder - One-rotation data** (4510-84 hex) to measure correctly the installation position of SOPT 1 input device. Set the value to **Safety Origin Position Offset** (4F00-04 hex) after checking the position is valid.
Set **Safety Origin Position Tolerance** (4F00-06 hex).

6 Carry out “Procedures to Start Operation: STEP10-1” again and transfer the safety parameters mentioned earlier 5. to a standard controller and a safety controller.

7 Follow “Procedures to Start Operation: STEP10-2” to check that a safety origin position is firmly determined.

8 Set a window for monitoring in SLP function.

As for the procedure for use of SLP function, refer to *8-7-3 Operation Procedure* on page 8-84.

Additional Information

Each procedure is applicable to the following step shown in *1-7 Procedures to Start Operation* on page 1-25.

Step	Procedures to Start Operation
1	STEP 3 Software and hardware design for safety control
2	STEP 6 Software setting and programming for safety control
3	STEP 8 Mounting and wiring
4 to 7	STEP 10-2 Check operation with actual machine

● Condition of Undetermined Origin Position

- When a Servo Drive is restarted.
- When an object of **Safety Origin Position Setting** (4F00 hex) is changed.
- When **Re-measurement of Discrepancy Distance** is carried out.
- When parameters for safety functions are changed.

*1. In a case **Safety Origin Position Determination Method** (4F00-01 hex) = 2: [Only specified operation] Safety Origin Position Offset and SOPT1 Input, a Servo Drive diagnoses only SOPT1 input.

Input Devices to Determine Safety Origin Position

The following SOPT input devices are used to determine Safety Origin Position.

Input device	Recommended devices
Safety Limit Switch	Compact Safety limit switch D4N
Limit Switch	Compact Limit Switch D4C
Photoelectric Sensor	Photoelectric sensor built-in compact amplifier E3Z
Static Capacity Type Proximity Sensor	Proximity Sensor E2K-C
Magnetic Proximity Sensor	Magnetic Proximity Sensor GLS

The following example is a wiring when safety limit switch, limit switch or magnetic proximity sensor are used.

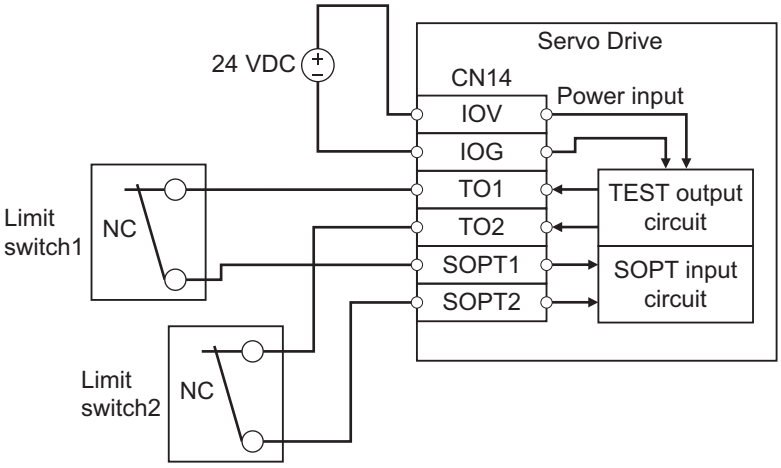

The following example is a wiring when photoelectric sensor or static capacity type proximity sensor are used.

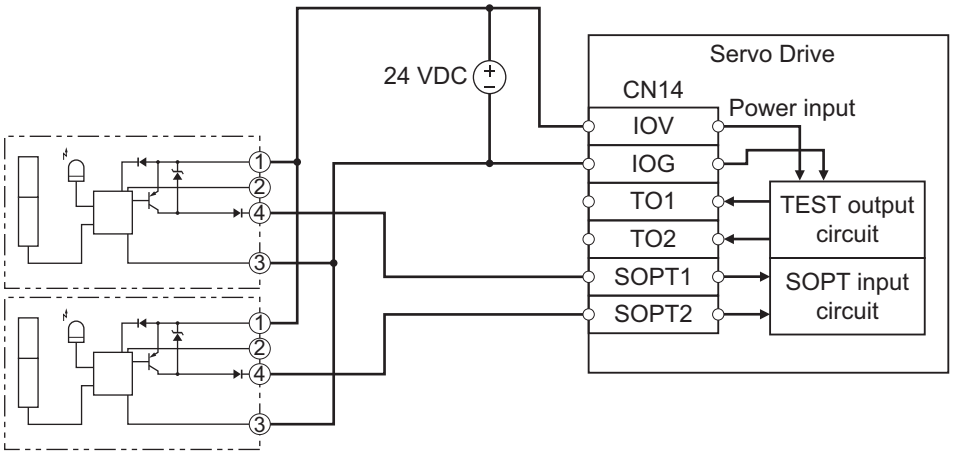

Precautions for Correct Use

For SOPT input device, use PNP transistor output type.

Test Pulse Diagnosis Function

This function detects failure of SOPT input devices and wiring errors. While this function is activated, the test pulse for self-diagnosis outputs via the test output terminals (TO1, TO2) at a certain interval. You can set TO1 or TO2 individually through **Safety Origin Position Setting - Test Pulse Diagnosis** (4F00-02 hex). The test pulse diagnosis function can detect following wiring errors.

Wiring errors	Detection timing
Contact to the power line (+ side)	When the Safety Origin Position is not determined.
Ground fault	
Short circuit between input wires	

SOPT Input Devices and Achievable Safety Level

Achievable safety level for use of two SOPT input devices is shown as follow.

No.	Input device 1	Input device 2	Required settings	Achievable safety level
1	Safety Limit Switch	Safety Limit Switch	Set both of TO1 and TO2 output terminals of **Safety Origin Position Setting - Test Pulse Diagnosis** (4F00-02 hex) to “1: Test pulse diagnosis is enable”.	SIL3/PLe
2	Limit Switch	Limit Switch		SIL3/PLe
3	Photoelectric Sensor	Capacity type Proximity Sensor	---	SIL3/PLe
4	Photoelectric Sensor	Magnetic Proximity Sensor	---	
5	Photoelectric Sensor	Limit Switch	---	

Achievable safety level for use of a SOPT input device is shown as follow.

No.	Input device 1	Required settings	Achievable safety level
1	Safety Limit Switch	Set TO1 output terminal of **Safety Origin Position Setting - Test Pulse Diagnosis** (4F00-02 hex) to “1: Test pulse diagnosis is enable”.	SIL3/PLe
2	Limit Switch		SIL3/PLe
3	Photoelectric Sensor	---	SIL3/PLe
4	Capacity type Proximity Sensor	---	
5	Magnetic Proximity Sensor	---	

In each case, following items are required.

- Analyze risk factors and error factors of the overall equipment. Confirm and carry out assessments/configuration required for SIL/PL.
- Finish SIL/PL reviews required for the third party certificate organization.

8-8 Safe Direction (SDI) Function

This function is used to monitor that a motor does not rotate toward banned rotation direction.

The banned rotation direction is designated with SDI positive direction command and SDI negative direction command. The function monitors the motor's rotation toward positive direction when SDI positive direction command is activated and negative direction when SDI negative direction command is activated.

Excessive Limit Monitoring Value Error (Error No. 71.03) occurs when a motor rotates toward the banned rotation direction.

8-8-1 Objects Requiring Settings

Index (hex)	Subindex (hex)	Name	Description		Reference
4F03	00	Safety Motor Rotation Direction Selection	Selects the safety motor rotation*1 direction to the command. 0: The motor rotates in clockwise direction after a Safety Servo Drive receives positive direction command. 1: The motor rotates in counter clockwise direction after a Safety Servo Drive receives positive direction command.		P. 9-136
66D0	00	SDI positive direction command	Gives positive direction rotation status and issues the SDI positive direction command.		P. A-115
			Read	Gives positive direction rotation status. 0: Not rotate to positive direction 1: Rotate to positive direction	
			Write	Issues the SDI positive direction command. 0: Activate SDI 1: Reset SDI	
66D1	00	SDI negative direction command	Gives negative direction rotation status and issues the SDI negative direction command.		P. A-115
			Read	Gives negative direction rotation status. 0: Not rotate to negative direction 1: Rotate to negative direction	
			Write	Issues the SDI negative direction command. 0: Activate SDI 1: Reset SDI	
66D3	00	SDI position zero window	Sets a monitoring position window when a motor stops.		P. A-115
66D5	00	SDI velocity zero window	Sets a monitoring limit when a motor stops.		P. A-115

*1. Regarding the rotation direction of the Servomotor, a clockwise rotation is defined as CW and a counterclockwise rotation is defined as CCW, when viewed from the load-side shaft.

Precautions for Correct Use

Set a multiple number of 128 to the setting value of **SDI position zero window** (66D3-00 hex). If you set other numbers, the setting value is automatically corrected to a multiple number of 128 which does not exceed the setting value for the operation. Example: When the setting value is between 256 and 383, 256 is automatically set to the setting value.

8-8-2 Operation Procedure

This section describes how to use the SDI function.

1 Set parameters.

Set **Safety Motor Rotation Direction Selection** (4F03-00 hex). Adjust the setting to **Motor Rotation Direction Selection** (3000-01 hex) in principle.

Set **SDI position zero window** (66D3-00 hex) and **SDI velocity zero window** (66D5-00 hex).

2 Activate SDI function.

SDI function starts monitoring of a safety position and a motor's velocity when SDI positive direction command or SDI negative direction command assigned to safety PDO is set to *0* (Activate SDI) from a safety controller.

8-8-3 Operation Timing

This section describes operation timing for SDI function.

Operation Timing in Start

(a) This section describes timing when a Servo Drive starts SDI function by SDI command.

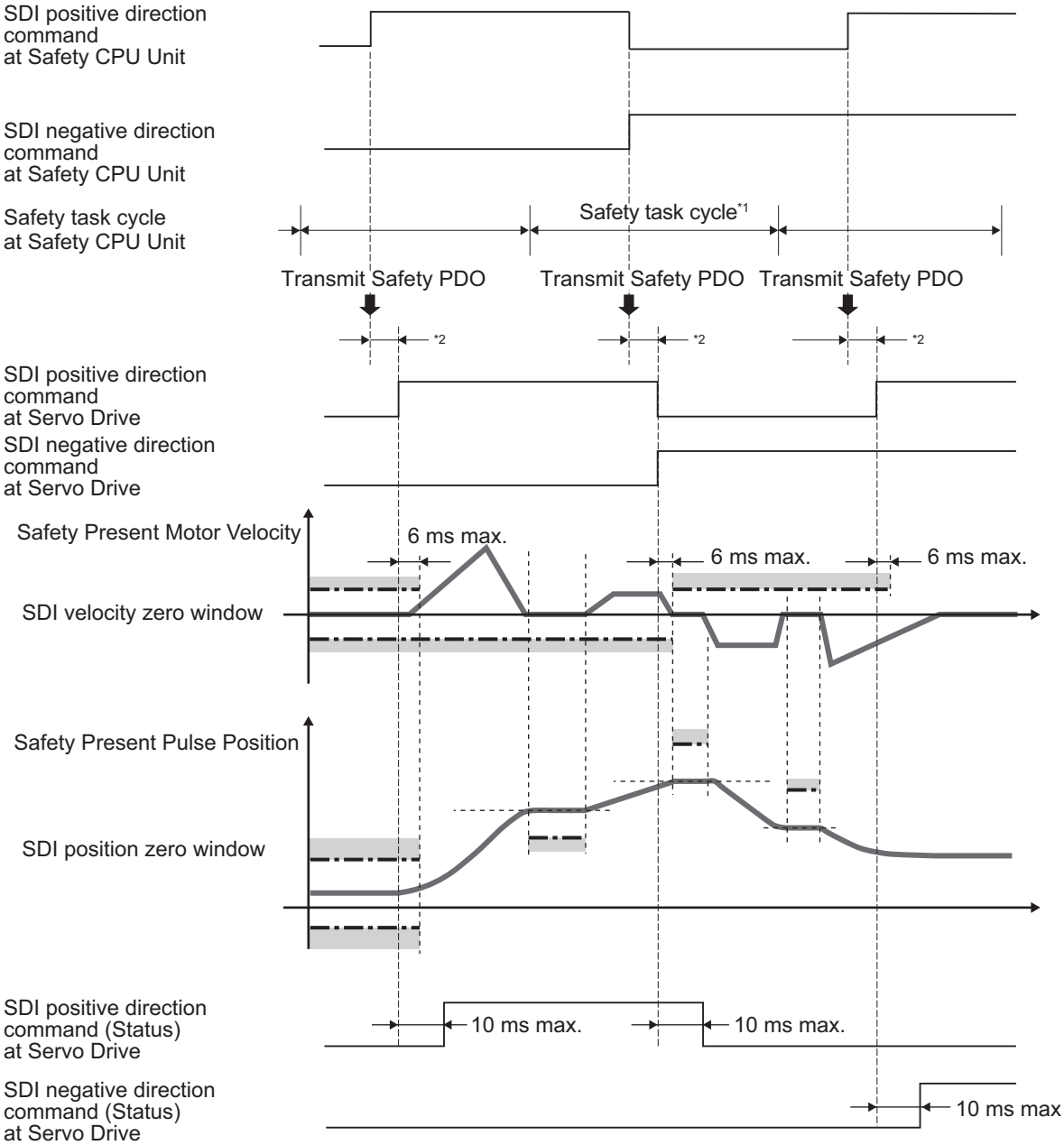

*1. As for safety task cycle, refer to *NX-series Safety Control Units User's Manual* (Cat. No. Z930).

*2. FSoE Communication Time.

- The stop position for monitoring standard is one where a safety drive detects motor's stop (30 r/min or less).
- SDI positive direction rotation status and SDI negative direction rotation status indicate present rotation status regardless of the SDI command. It indicates status when they receive safety PDO.

Operation Timing in Error Detection

(a) Timing when an error occurs and STO function is activated due to over SDI velocity limit.

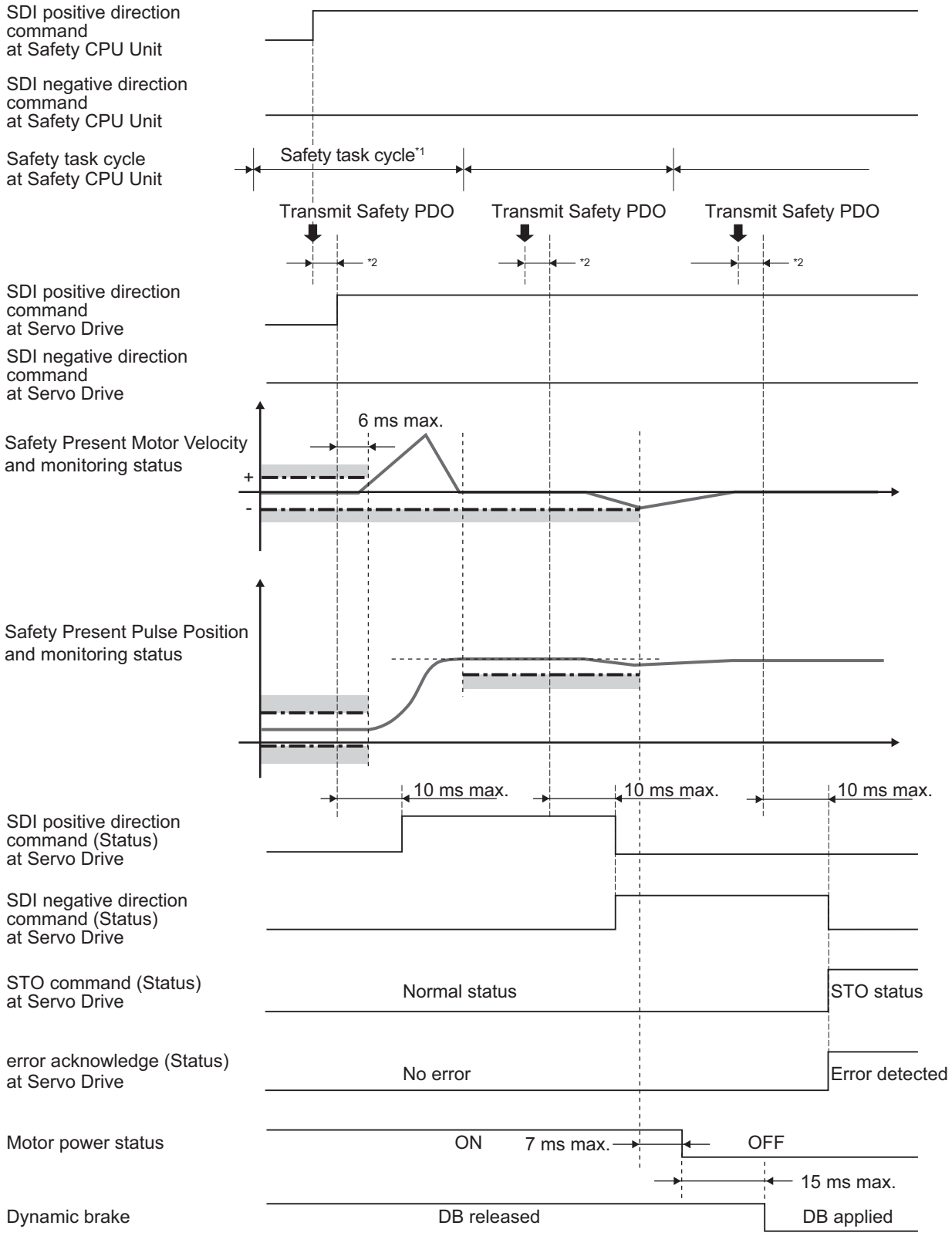

*1. As for safety task cycle, refer to *NX-series Safety Control Units User's Manual* (Cat. No. Z930).

*2. FSoE Communication Time.

Excessive Limit Value Error (Error No. 71.03) occurs and a Servo Drive goes into the STO status when a Safety Present Motor Velocity exceeds SDI velocity zero window. To reset the error, refer to *8-1-10 Procedure for Reset of Safety Error* on page 8-20.

(b) Timing when an error occurs and STO function is activated due to out of SDI position zero window.

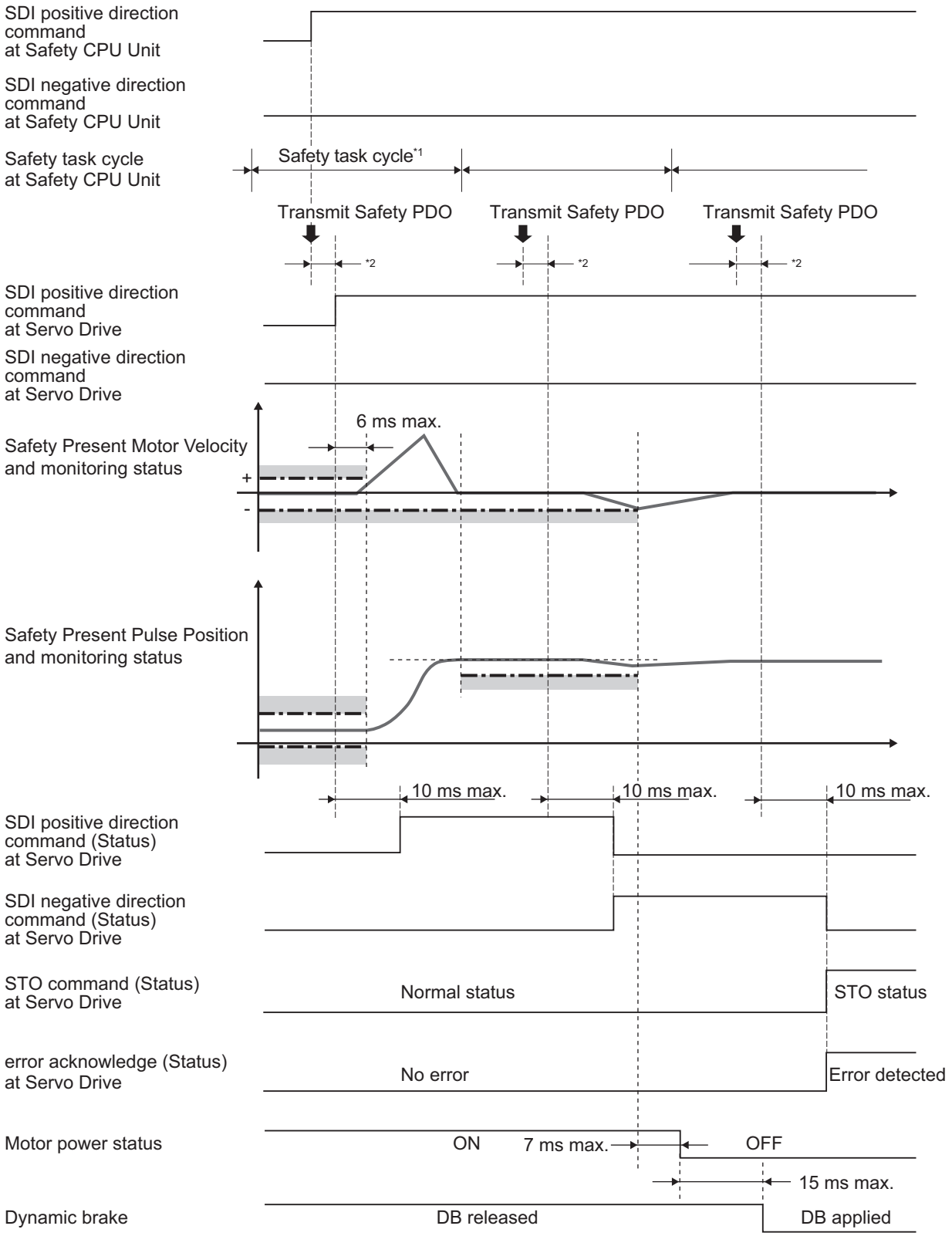

*1. As for safety task cycle, refer to *NX-series Safety Control Units User's Manual* (Cat. No. Z930).

*2. FSoE Communication Time.

Excessive Limit Value Error (Error No. 71.03) occurs when Safety Present Pulse Position surpasses SDI position zero window. As for a method to reset errors, refer to *8-1-10 Procedure for Reset of Safety Error* on page 8-20.

Operation Timing in Termination

This section describes timing when a Servo Drive terminates SDI function by SDI command.

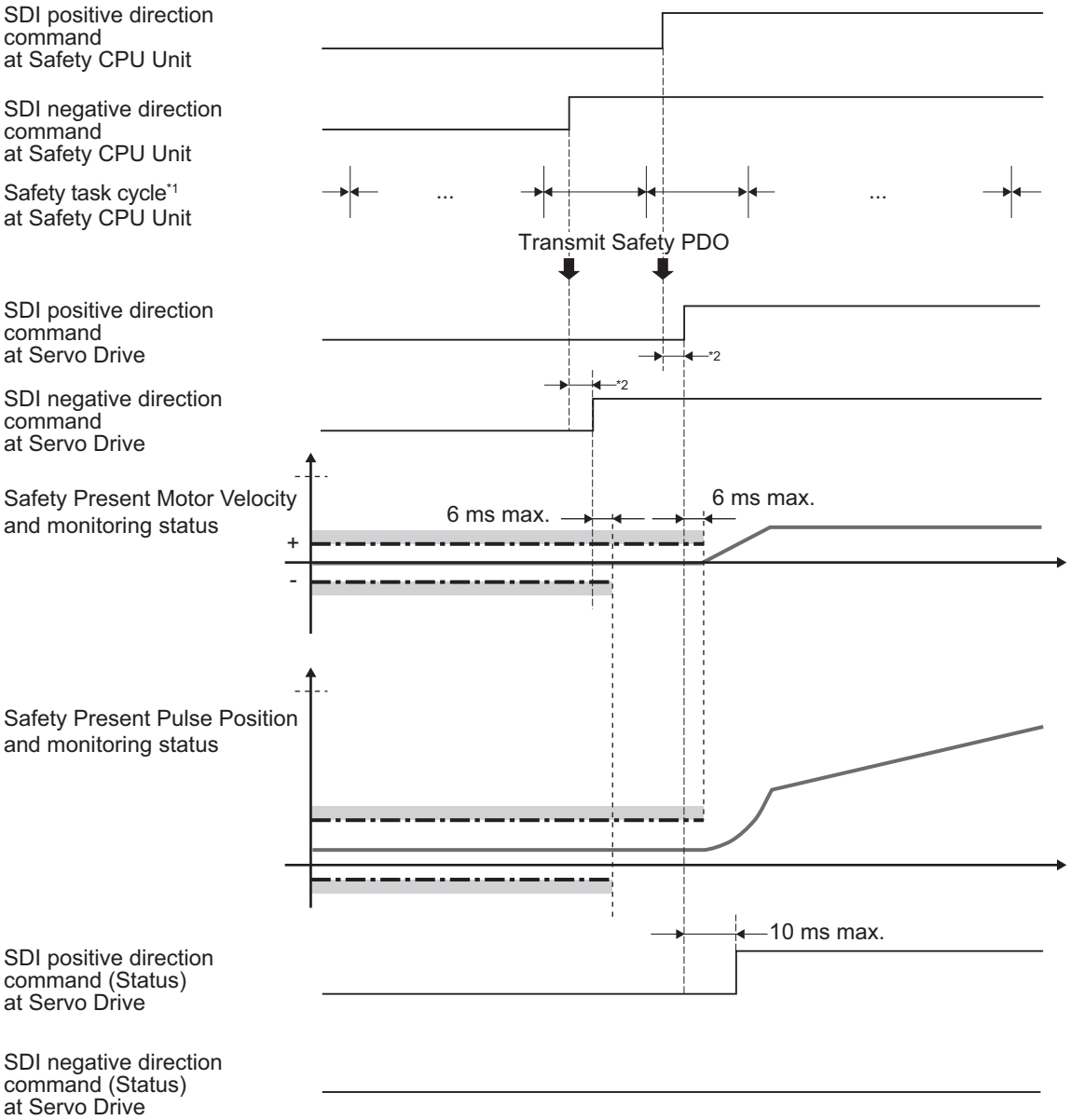

*1. As for safety task cycle, refer to *NX-series Safety Control Units User's Manual* (Cat. No. Z930).

*2. FSoE Communication Time.

Change Timing on SDI Positive Direction Rotation Status and SDI Negative Direction Rotation Status

- SDI positive direction rotation status and SDI negative direction rotation status show a motor rotation status regardless of SDI command.
- These status have a hysteresis at 10 r/min.

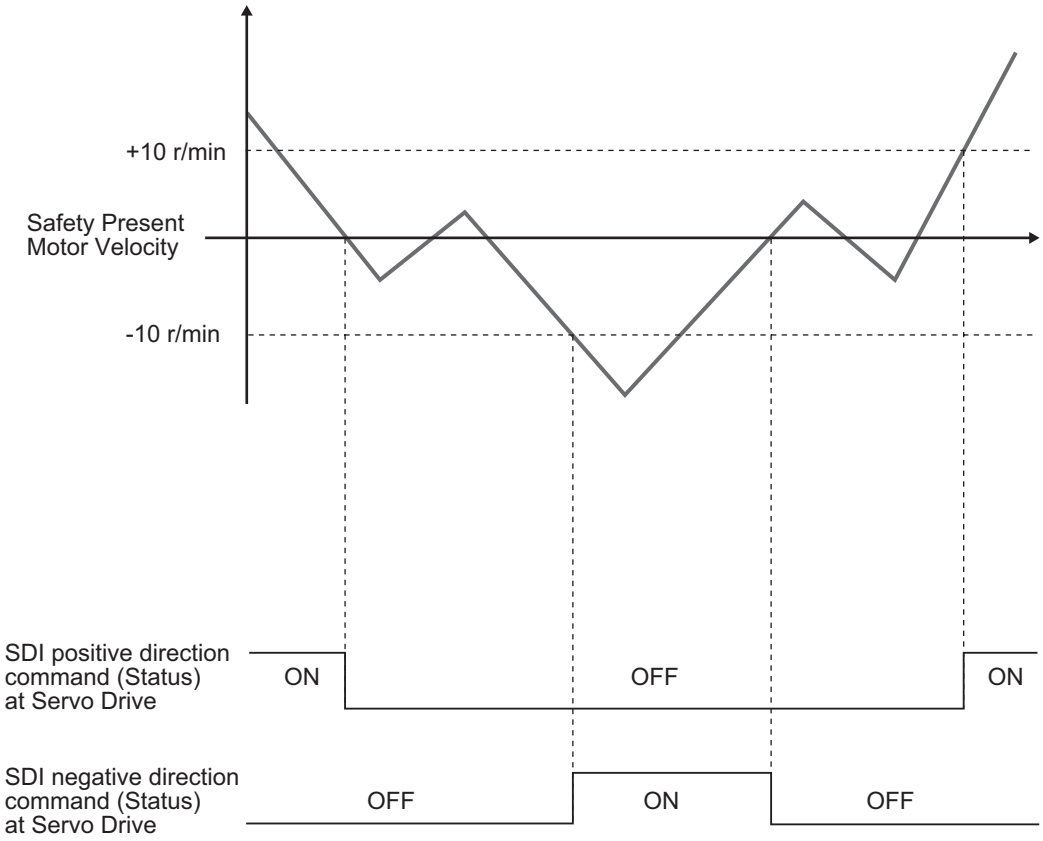

8-8-4 Example of Safety Program

This section gives an example of a program for SDI function of Servo Drive from Safety controller.

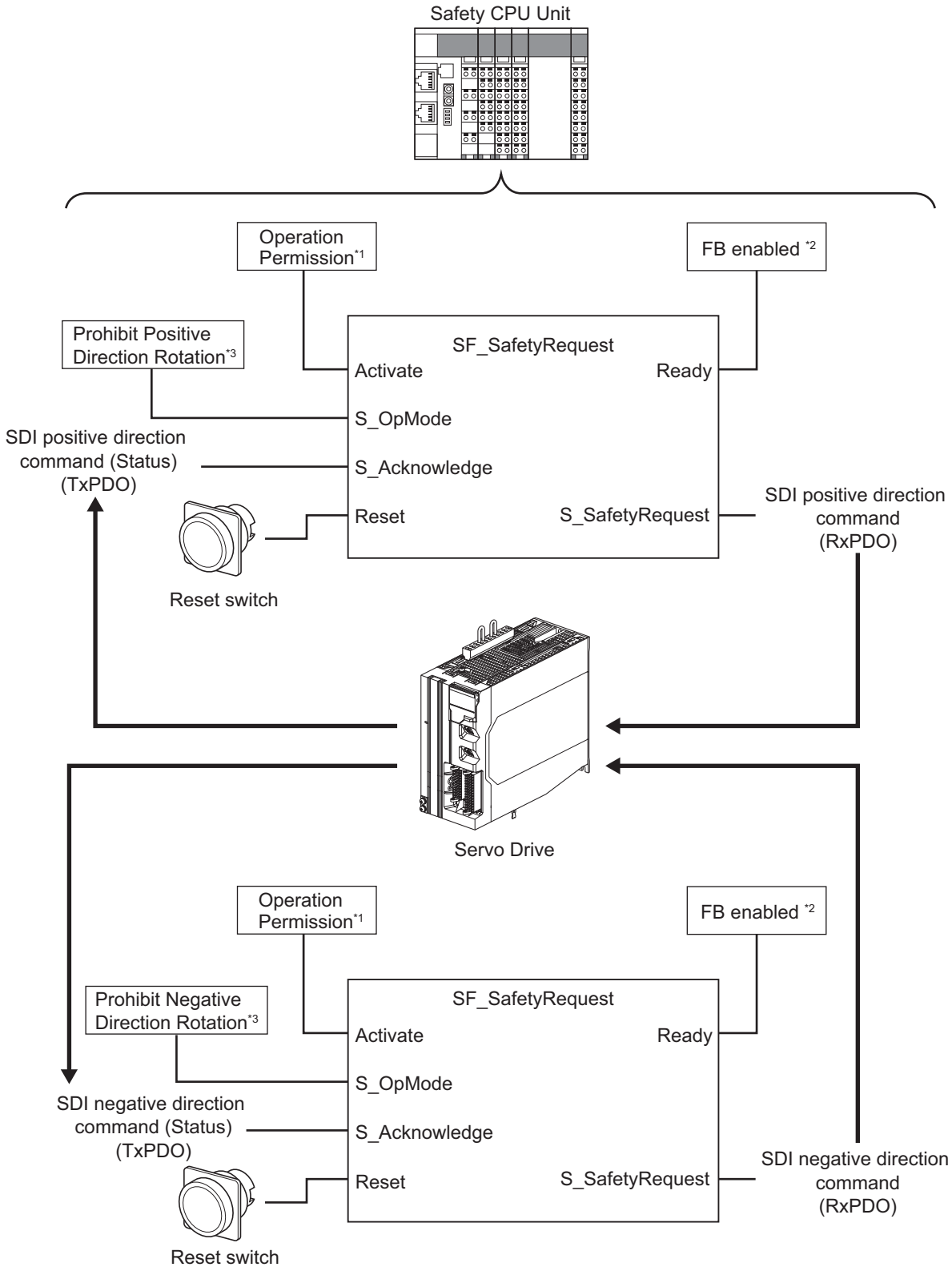

*1. When you input safety connection status, a safety controller can limit operations for function block according to status of a system or a program.

*2. It indicates that a function block can be activated. Also, it can be used as inputs of other function blocks and the programs.

*3. According to the system condition, determine the rotation direction that you want to prohibit, and input it.

For details about function block SF_SafetyRequest, refer to the *Safety Control Unit Command Reference Manual* (Cat. No. Z931).

8-9 Safe Brake Control (SBC) Function

The Safe Brake Control (SBC) function is used to control the safety output for brakes; for example, interlocking operation of Brake Interlock Output (BKIR) or it of STO or SS1 from a safety controller.

Use both of SBC1 and SBC2 when two-circuit brake system is constructed, or use one of them when single-circuit brake system is constructed, as the brake control signal of SBC1/SBC2 output terminals are synchronized. Each brake system has a different safety level. Refer to *8-9-5 Connection Examples* on page 8-119.

Connect an external brake via the safety relay when the drive current of the brake is higher than 2.21 A which is the maximum SBC output terminal. For more information about the safety relay, refer to *8-9-8 Safety Relay Stuck Error Detection* on page 8-122. Confirm the necessary settings to monitor the safety relay.

There are four methods to activate the SBC function. (a) through (c) are recommended.

(a) To operate the SBC function with BKIR

(b) To operate the SBC function with STO function

(c) To operate the SBC function with SS1 function

(d) To operate the SBC function with SBC command from a safety controller

Possible to combine (a) through (d).

For (a), output logical AND of the SBC status and the BKIR status to the SBC output terminal. For more information, refer to *8-9-3 Operation Procedure* on page 8-116.

For (b) and (c), hold the motor axis when each function goes into the STO status. To use with the STO function, refer to *8-2 Safe Torque OFF (STO) Function* on page 8-22. To use with the SS1 function, refer to *8-3 Safe Stop 1 (SS1) Function* on page 8-39.

For (d), operate the SBC function from a safety controller at any given time.

Precautions for Correct Use

Do not use the SBC function to brake the motor while the operation. Injury or failure may result.

8-9-1 Configuration Method for SBC

This is an example of SBC system configuration.

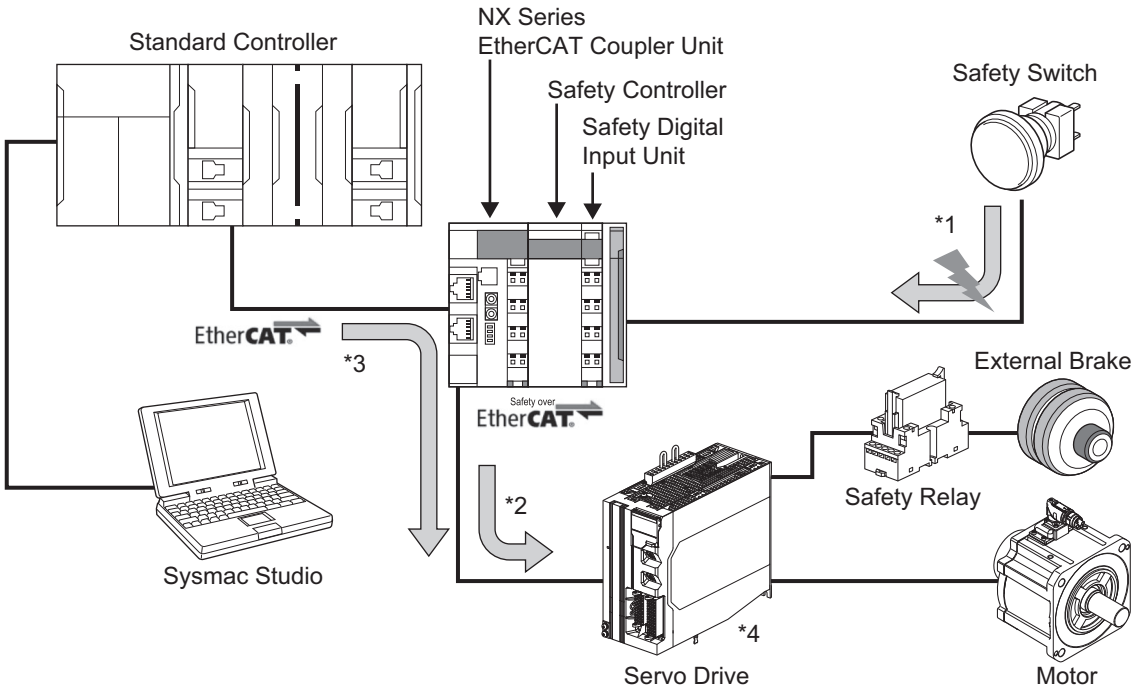

Example: To operate the SBC function with the BKIR

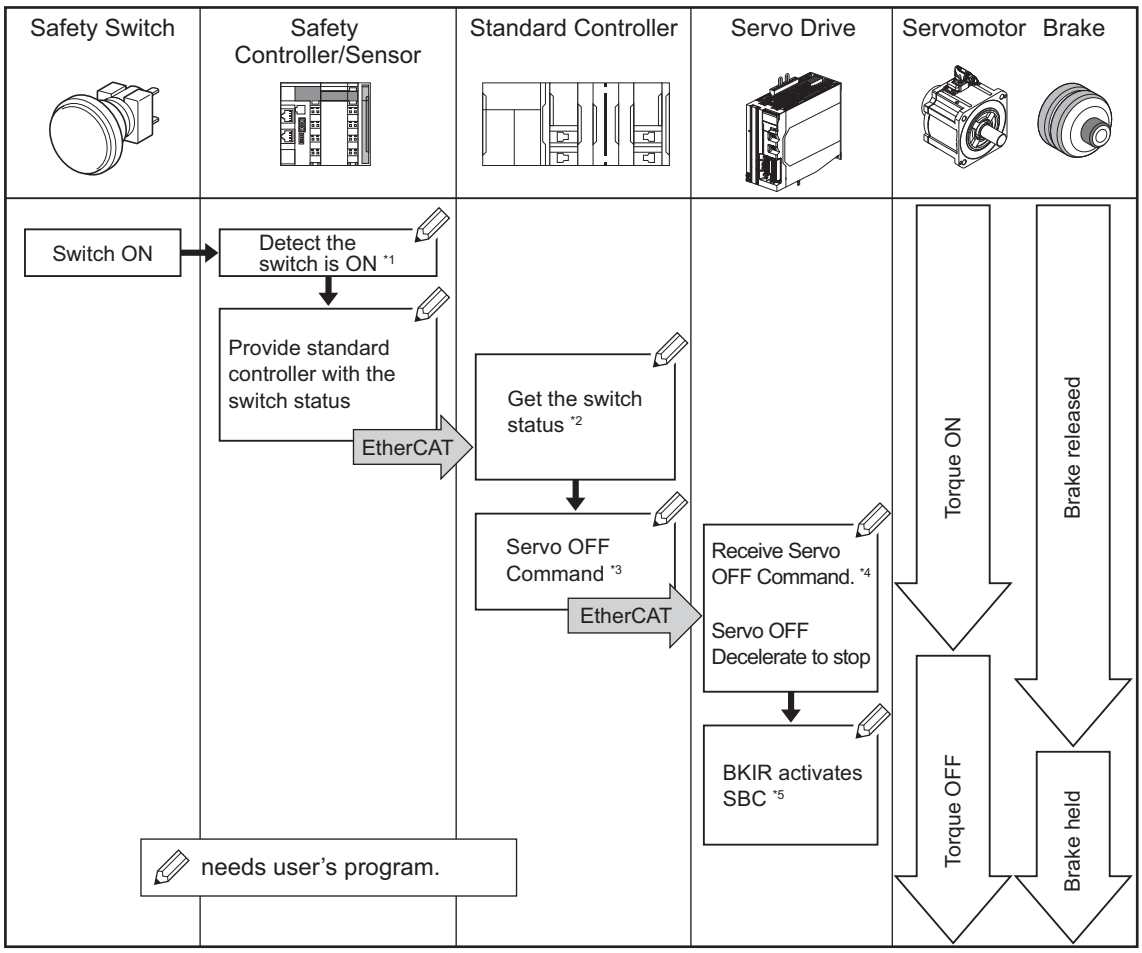

*1. The Safety Sensor and the Safety Controller detect that the Safety Switch is turned ON.

*2. Referring to the information in the Safety Controller, the Standard Controller confirms that the Safety Switch is turned ON.

*3. The Standard Controller sends Servo OFF command to the Servo Drive.

*4. After receiving the Servo OFF command from the Standard Controller, the Servo Drive decelerates the motor to stop.

*5. By the interlocking operation of the SBC and the BKIR, the Servo Drive holds the motor.

Precautions for Correct Use

For *1, it is required to make and control a safety program of the Safety Controller. For *2 and *3, it is also required to make and control a user program of the Standard Controller.

The safety program and the user program are parts of the safety system for controlling. Therefore, you need to make and control the appropriate programs depends on the equipment and the system.

8-9-2 Objects Requiring Settings

Index (hex)	Subindex (hex)	Name	Description		Reference
6660	–	SBC command	Gives SBC function state and issues SBC command.		P. A-66
	01	SBC command 1	Gives SBC instance 1 state and issues SBC command.		
			Read	Gives SBC status. 0: Normal status 1: SBC Status	
			Write	Issues SBC Command. 0: Activate SBC 1: Reset SBC	
6661	00	SBC brake time delay	Sets the SBC Brake Delay Time.		P. A-67
	01	SBC brake time delay	Sets the SBC Brake Delay Time for the SBC function.		
4F08	00	Safety Relay Activate	Sets the Safety Relay. 0: Deactivate (Not use) 1: Activate (Use)		P. 9-137
4F09	00	Safety Relay OFF Delay Time 1	Sets the delay time until a safety relay output is turned OFF after SBC1 output is turned OFF.		P. 9-137
4F0A	00	Safety Relay OFF Delay Time 2	Sets the delay time until a safety relay output is turned OFF after SBC2 output is turned OFF.		P. 9-137

Precautions for Correct Use

- Set an even number to **SBC brake time delay** (6661-01 hex). When a setting value is an odd number, the function is activated as the value +1.
- Set an even number to **Safety Relay OFF Delay Time 1** (4F09-00 hex). When a setting value is an odd number, the function is activated as the value +1.
- Set an even number to **Safety Relay OFF Delay Time 2** (4F0A-00 hex). When a setting value is an odd number, the function is activated as the value +1.

8-9-3 Operation Procedure

Refer to *8-2 Safe Torque OFF (STO) Function* on page 8-22 and *8-3 Safe Stop 1 (SS1) Function* on page 8-39 to interlock with STO, SS1 functions.

This section explains how to interlock with the Brake Interlock Output (BKIR).

Description of Operation

When interlocking the SBC function with the Brake Interlock Output (BKIR), the logical AND of the SBC status and the BKIR status outputs to the SBC output terminal. For more information about the BKIR status, refer to *7-6-2 Description of Operation* on page 7-24.

● Interlock with SBC Status and BKIR Status

SBC Status	BKIR Status	SBC Output Terminal	Physical Output (4600-81 hex) Bit 22
Brake released (1)	Brake released (1)	Brake released (1)	Brake released (1)
Brake released (1)	Brake held (0)	Brake held (0)	Brake held (0)
Brake held (0)	Brake released (1)	Brake held (0)	Brake held (0)
Brake held (0)	Brake held (0)	Brake held (0)	Brake held (0)

Operating Procedure

1 Assign SBC to PDO.

Assign **SBC command - SBC command 1** (6660-01 hex) to PDO. For more information, refer to *Setting of Optional Safety PDO* on page 8-9.

2 Set parameters for the SBC function.

- Set the brake delay time to use to **SBC brake time delay** (6661-01 hex). To combine the built-in brake of the Servomotor with an external brake, set the longer time out of those.
- When external brake is connected via a safety relay, set *1* (Activate) to **Safety Relay Activate** (4F08-00 hex), and set the OFF delay time for the safety relay to use to **Safety Relay OFF Delay Time** (4F09-00 hex, 4F0A-00 hex).

3 Set parameters for Brake Interlock Output (BKIR).

- Set *1* (Enable) to **Brake Interlock Output - Enable** (4610-01 hex), and set **Timeout at Servo OFF** (4610-02 hex) and **Threshold Speed at Servo OFF** (4610-03 hex).
- Set the brake delay time to use to **Hardware Delay Time** (4610-04 hex). To combine the built-in brake of the Servomotor with an external brake, set the longer time out of those.

4 Set the output destination for Brake Interlock Output (BKIR).

Set the Safe Brake Control (SBC) output to **External Brake Interlock Output - Port Selection** (4663-01 hex).

5 Release the SBC.

Set the SBC command which is assigned to PDO to *1* (Reset SBC) from a safety controller. However, if BKIR status is still in *0* (Brake held) at that time, the brake is not released. The SBC output terminal will be changed by the logic AND of the SBC status and the BKIR status.

Precautions for Correct Use

- In the following case, SBC output terminal turns to be brake held regardless of Brake Interlock Output (BKIR) status because SBC command is brake held.
  - FSoE communications is not established.
  - SBC function is not used (SBC command is not assigned to PDO).
- To interlock the SBC function with Brake Interlock Output (BKIR), the BKIR status should be kept released or held for 6 ms or longer.

8-9-4 Connection Method

This section explains how to connect to SBC output terminal.

To Connect the Brakes Directly

Connect SBC PS terminal to 24 VDC, and connect SBC CM to 24 VDC GND.

Connect brakes to SBC1+terminal/SBC1-terminal, SBC2+terminal/SBC2-terminal.

Do not connect anything to SBC RFB terminal.

For an object required for setting, set **Safety Relay Activate** (4F08-00 hex) to *0* (Deactivate).

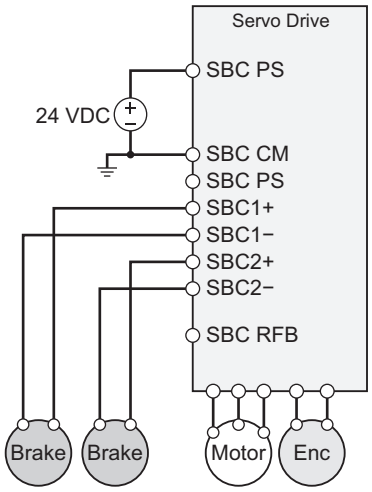

To Connect the Brakes via the Safety Relay

Connect SBC PS terminal to 24 VDC, and connect SBC CM to 24 VDC GND.

Connect each SBC output terminal to safety relays, and then connect brakes to NO contacts of the relays. Connect SBC RFB terminal to NC contact of the safety relays.

For an object required for setting, set **Safety Relay Activate** (4F08-00 hex) to *1* (Activate).

Use safety relays which have two NO contacts or more for brake application and a NC contact or more for error diagnosis. The recommended product model is shown as below.

- G7SA
- G7S-□-E

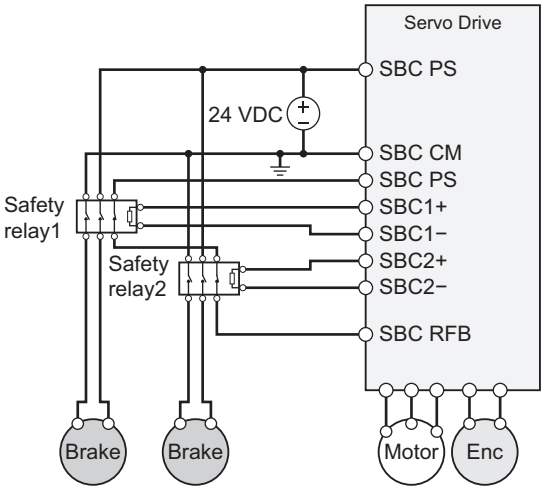

Precautions for Correct Use

- The brake signals via SBC1/SBC2 output terminals are synchronized, so you cannot control these brakes separately.
- Do not use the safety relay with *0* (Deactivate) of **Safety Relay Activate** (4F08-00 hex). *0* (Deactivate) may not detect wiring errors, so make sure that you set *1* (Activate) to **Safety Relay Activate** (4F08-00 hex).

8-9-5 Connection Examples

These are examples of a brake with the SBC function. When the brake that you use has B10d data, following safety level can be achieved, depends on the number of brakes connecting to the SBC output terminal.

- Connection SBC output terminal to one brake: SIL2/PLd
- Connection SBC output terminal to two brakes: SIL3/PLe

About the connection of SBC output terminal, refer to *8-9-4 Connection Method* on page 8-117.

About the B10d data of the built-in brake of the Servomotor, refer to *3-2 Servomotor Specifications* on page 3-31. When using an external brake, contact manufacturers about B10d data of the external brake.

Example of Connection to Brake

● Number of Brakes: 1 (SIL2/PLd)

- Connect the built-in brake of Servomotor to SBC1 output terminal

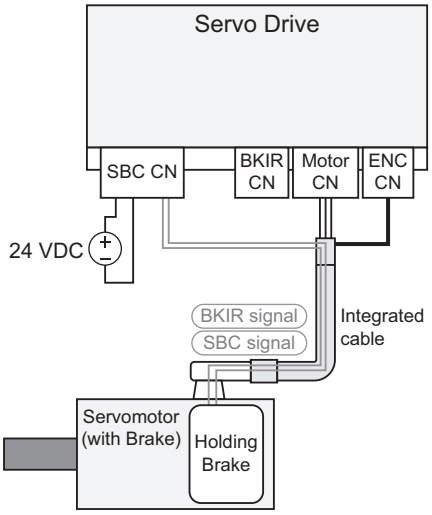

- Connect the external brake to SBC1 output terminal

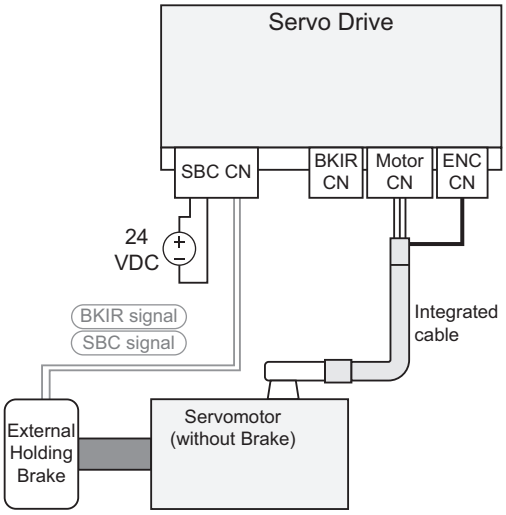

● Number of Brakes: 2 (SIL3/PLe)

- Connect the built-in brake of Servomotor to SBC1 output terminal
- Connect the external brake to SBC2 output terminal

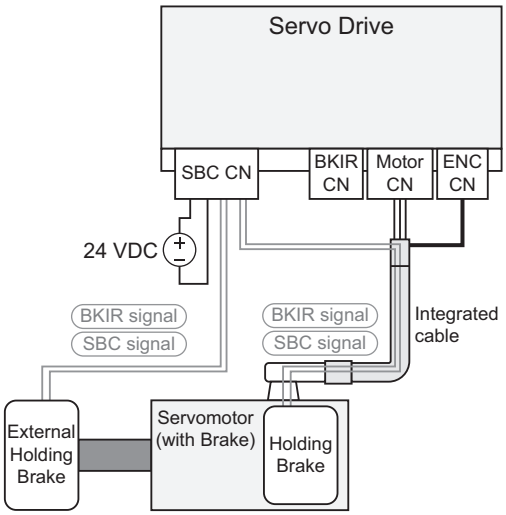

8-9-6 Operation Timing

This section explains the operation timing by the SBC command from a safety controller.

About the operation timing to interlock with STO or SS1 functions, refer to *Operation Timing* on page 8-33 or *8-3-3 Operation Timing* on page 8-44.

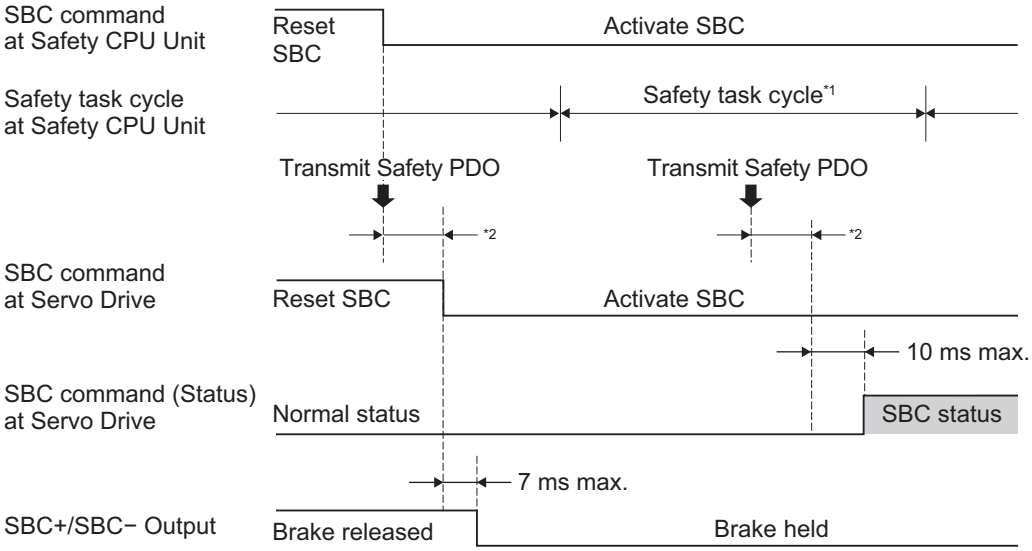

*1. As for safety task cycle, refer to *NX-series Safety Control Units User's Manual* (Cat. No. Z930).

*2. FSoE Communication Time.

When interlocking with Brake Interlock Output (BKIR), the logical AND of the SBC status and the BKIR status is output to the SBC output terminal. As for the details, refer to *8-9-3 Operation Procedure* on page 8-116.

8-9-7 SBC Power Monitor

This function monitors inputs to SBC PS terminal.

You can monitor the inputs by **I/O Monitor - Safety IO Power Supply** (4600-82 hex).

When 24 VDC inputs to the SBC PS terminal, the monitoring value is *1*.

When 24 VDC does not input to the SBC PS terminal, or when over voltage inputs, the monitoring value is *0*.

Precautions for Correct Use

When the Safe Brake Control (SBC) is selected for the output destination of the Brake Interlock Output (BKIR), in regardless of SBC PS terminal input, the monitoring value is *0* as long as the Brake Interlock Output (BKIR) is in brake held status.

About the destination to output, refer to *7-6 Brake Interlock* on page 7-22.

8-9-8 Safety Relay Stuck Error Detection

This section explains about the Safety Relay Stuck Error Detection when the safety relay is connected to the SBC output terminal.

About how to connect the safety relay, refer to *8-9-4 Connection Method* on page 8-117.

Operation Timing

The Safety Relay Stuck Error Detection timing is as follows.

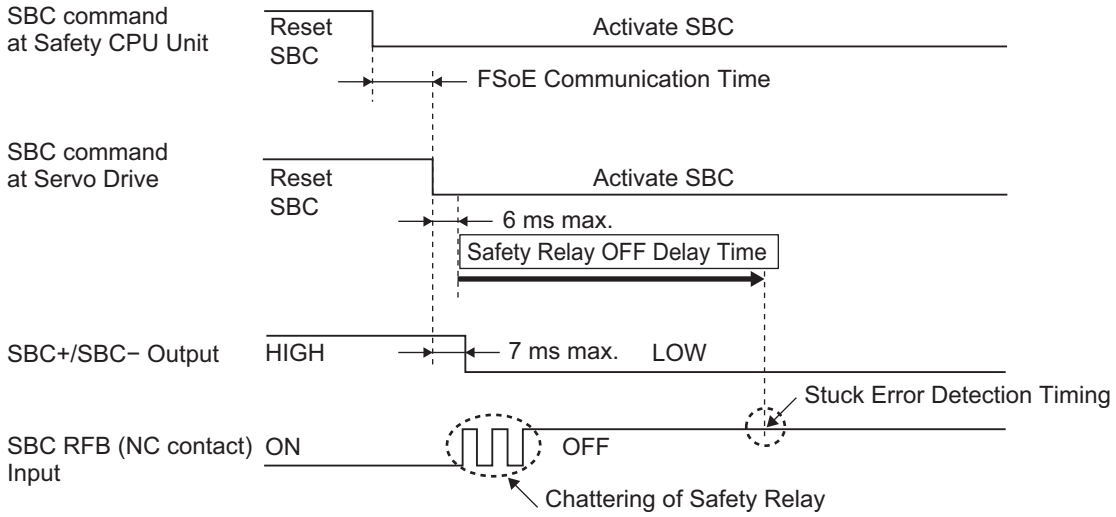

When the Safety Relay Output is ON, stuck errors are detected based on the stuck error detection timing.

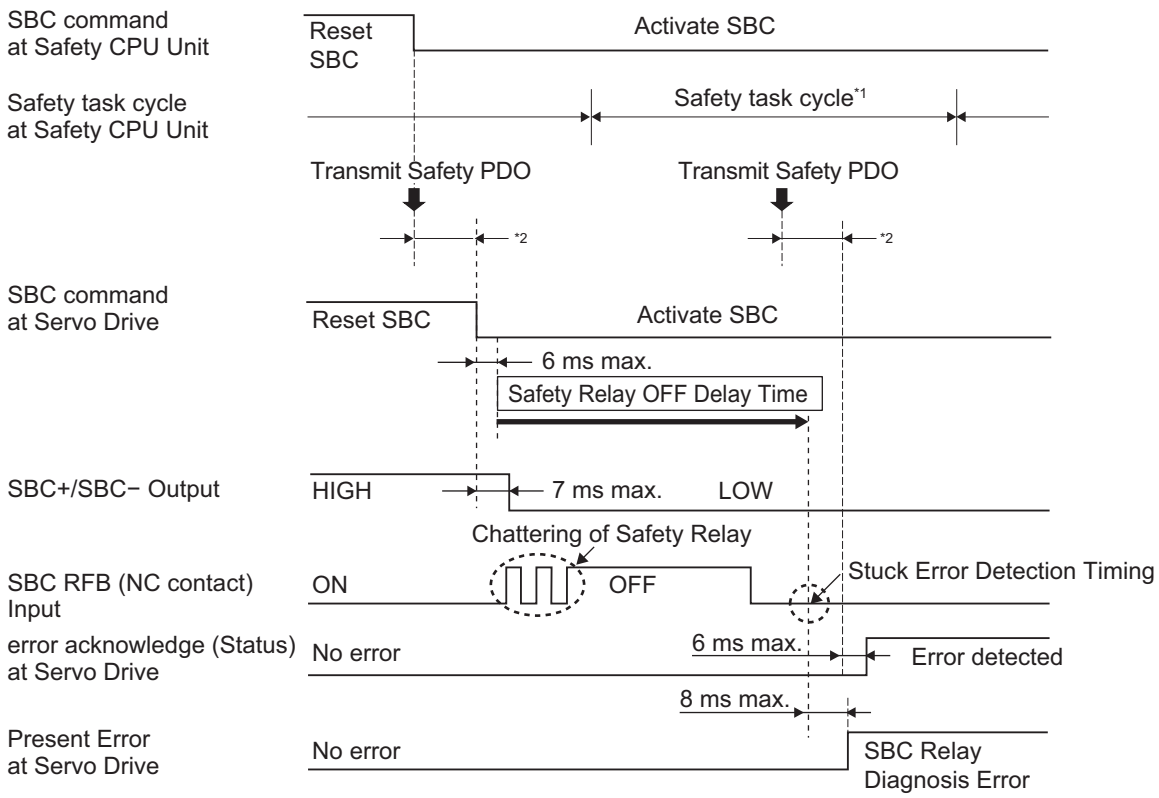

Precautions for Correct Use

- The safety relay stuck error detection function only detects the stuck errors on the ON side.
- When you use the safety relay, set **Safety Relay Activate** (4F08-00 hex) to *1* (Activate). If *0* (Deactivate) is set, may not detect wiring errors.

8-10 Safety Position/Velocity Validation Monitoring Function

Safety Position/Velocity Validation Monitoring Function provides redundancy with checks of validity in data about safety position/velocity while safety monitoring functions are activated. This function allows you to change the safety level of the safety monitoring function to SIL3/PLe.

This function compares a safety position/velocity with each command of position/velocity generated by the Servo Drive. When the results exceed position/velocity tolerance after the comparison, Safety Function Error (Error No. 71.02) occurs and the motor stops by STO function.

The following table shows the achievable safety level, by combinations of safety monitoring functions and basic controls.

Safety Position/Velocity Validation Monitoring Function	Safety function	Position control	Velocity control
		Achievable safety level	Achievable safety level
Activate	SOS function	SIL3/PLe	SIL3/PLe
	SLS function	SIL3/PLe	SIL3/PLe
	SLP function	SIL3/PLe	SIL2/PLd
	SDI function	SIL3/PLe	SIL2/PLd
Deactivate	SOS function	SIL2/PLd	SIL2/PLd
	SLS function	SIL2/PLd	SIL2/PLd
	SLP function	SIL2/PLd	SIL2/PLd
	SDI function	SIL2/PLd	SIL2/PLd

The safety level is SIL2/PLd while basic control is torque control regardless of this function.

The safety position/velocity validation monitoring function is activated with SOS, SLS, SLP and SDI function. When these safety functions are activated, this function monitors the validation of the reliability of safety position/velocity.

Read following as for more detailed timing.

Safety function	Monitoring Timing
SOS function	In the SOS status
SLS function	In the SLS status
SLP function	In the SLP status
SDI function	When the SDI positive/negative direction command is activated

8-10-1 Details about Validation Monitoring

This function monitors the safety position/velocity validation by comparing the command of the Servo Drive as shown below. **Safety Present Pulse Position** which is used by Position validation monitoring is converted to the **Present Pulse Position** equivalent. As for the conversion of Safety Present Pulse Position to the present pulse position equivalent, refer to *8-1-8 Position/Velocity Data Monitored by Safety Functions* on page 8-16.

Position validation monitoring: The absolute value of difference between **Internal Position Command** and **Safety Present Pulse Position** ≤ **Position Tolerance**

Velocity validation monitoring: The absolute value of difference between **Internal Velocity Command** and **Safety Present Motor Velocity** ≤ **Velocity Tolerance**

Position/velocity validation is monitored when “Yes” is applied in the table.

Basic control	Position control				Velocity control			
Safety position/velocity validation monitoring function	SOS	SLS	SLP	SDI	SOS	SLS	SLP	SDI
Position validation monitoring	Yes		Yes	Yes	Yes*1			
Velocity validation monitoring		Yes				Yes		

*1. Activate the SOS function with the motor stops completely. Otherwise, the safety function errors could be detected.

8-10-2 Objects Requiring Settings

Index (hex)	Subindex (hex)	Name	Description	Reference
4F01	---	Safety Position/Velocity Validation Monitoring Function	Sets the Safety Position/Velocity Validation Monitoring Function.	P. 9-134
	01	Function Enable	Selects to enable or disable the Safety Position/Velocity Validation Monitoring Function. 0: Disable 1: Enable	
	02	Position Tolerance	Sets the Tolerance Value of the Position Validation Monitoring.	
	03	Velocity Tolerance	Sets the Tolerance Value of the Velocity Validation Monitoring.	

Precautions for Correct Use

Set a multiple number of 128 to the setting value of **Position Tolerance** (4F01-02 hex). If you set other numbers, the setting value is automatically corrected to a multiple number of 128 which does not exceed the setting value for the operation. Example: When the setting value is between 256 and 383, 256 is automatically set to the setting value.

8-10-3 Operation Procedure

1 Set parameters.

Set *1* (Enable) to **Safety Position/Velocity Validation Monitoring Function - Function Enable** (4F01-01 hex).

When using SOS/SLP/SDI functions, set **Position Tolerance** (4F01-02 hex). When using SLS function, set **Velocity Tolerance** (4F01-03 hex).

2 Activate the safety monitoring function.

A Servo Drive starts the monitoring of a safety present pulse position and a safety present motor velocity when commands of safety monitoring functions assigned to safety PDO is set to *0* (Activate) from a safety controller.

As for the details, refer to sections of each safety monitoring function.

8-10-4 Operation Timing

This section describes operation timings of the safety position/velocity validation monitoring functions.

The following charts shown the operation timing when **Motor Rotation Direction Selection** corresponds to **Safety Motor Rotation Direction Selection**, and then **Safety Present Pulse Position** is converted to the present pulse position equivalent.

Safety Position Validation Monitoring

This section describes change timing when a difference between **Internal Position Command** and a **Safety Present Pulse Position** exceeds position tolerance.

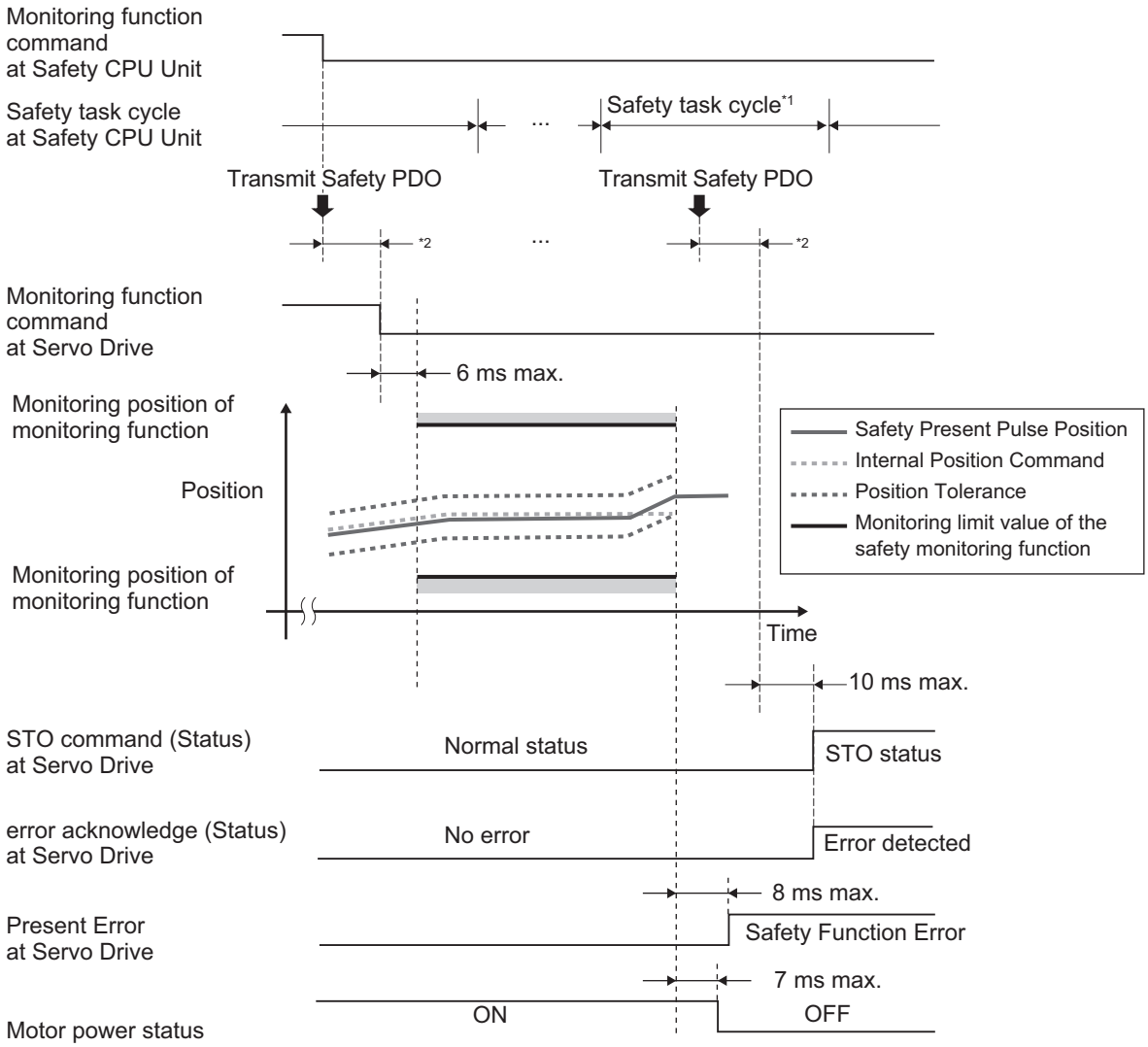

*1. As for safety task cycle, refer to *NX-series Safety Control Units User's Manual* (Cat. No. Z930).

*2. FSoE Communication Time.

Safety Velocity Validation Monitoring

This section describes change timing when a difference between **Internal Velocity Command** and a **Safety Present Motor Velocity** exceeds the velocity tolerance.

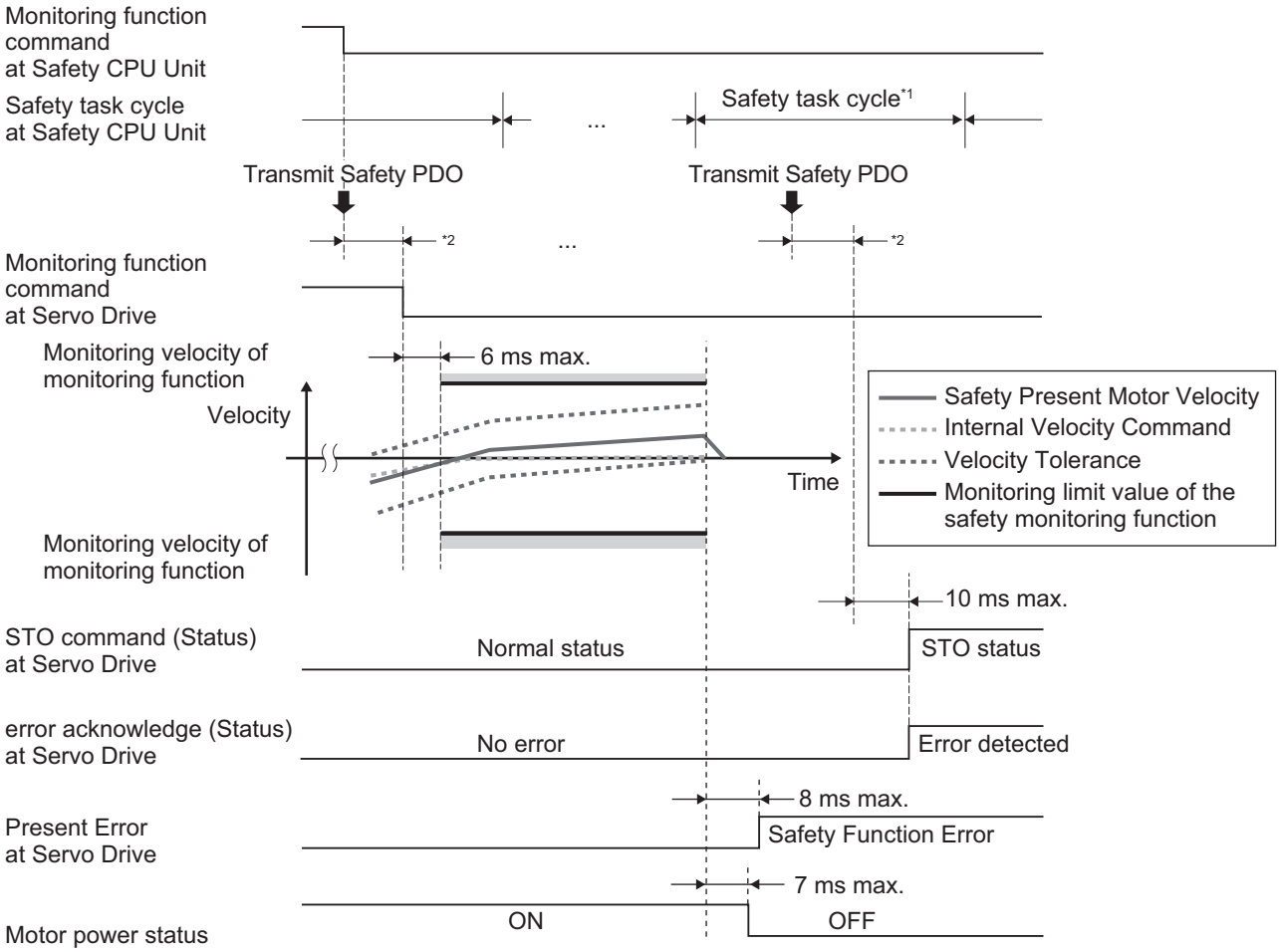

*1. As for safety task cycle, refer to *NX-series Safety Control Units User's Manual* (Cat. No. Z930).

*2. FSoE Communication Time.

Relation between Safety Monitoring Function and Position Tolerance

When Position Tolerance, prior to and subsequent to **Safety Present Pulse Position**[*1], exceeds the safety monitoring function's range, the Servo Drive goes into the STO status and Monitoring Limit Exceedance Error (Error No. 71.03) occurs.

Change timing is shown below.

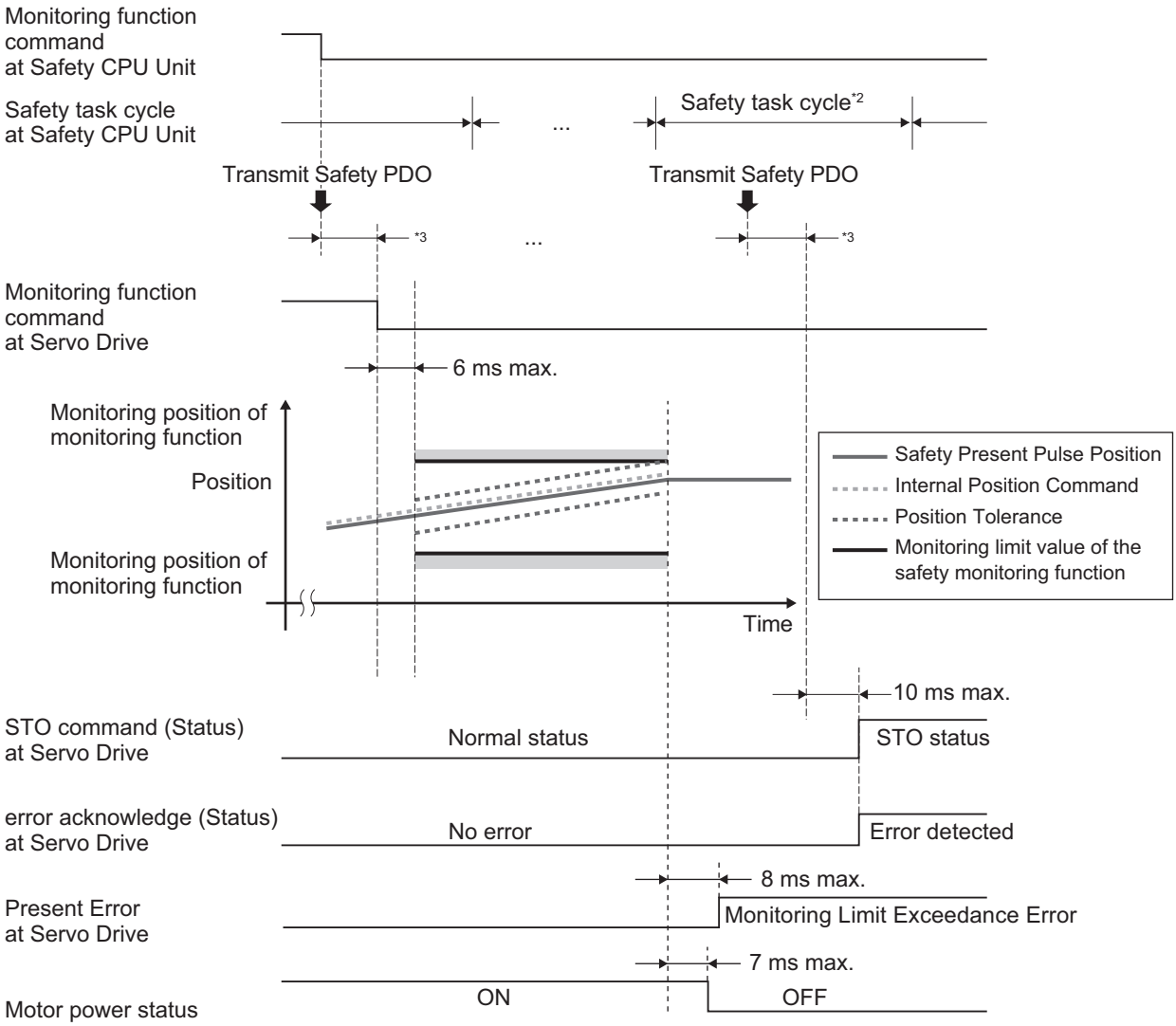

*1. When SLP function is activated, Safety Present Position is subjected to the monitoring.

*2. As for safety task cycle, refer to *NX-series Safety Control Units User's Manual* (Cat. No. Z930).

*3. FSoE Communication Time.

Relation between Safety Monitoring Function and Allowable Velocity Range

When Velocity Tolerance, prior to and subsequent to **Safety Present Motor Velocity**, exceeds the safety monitoring function's range, the Servo Drive goes into the STO status and Monitoring Limit Exceedance Error (Error No. 71.03) occurs.

Change timing is shown below.

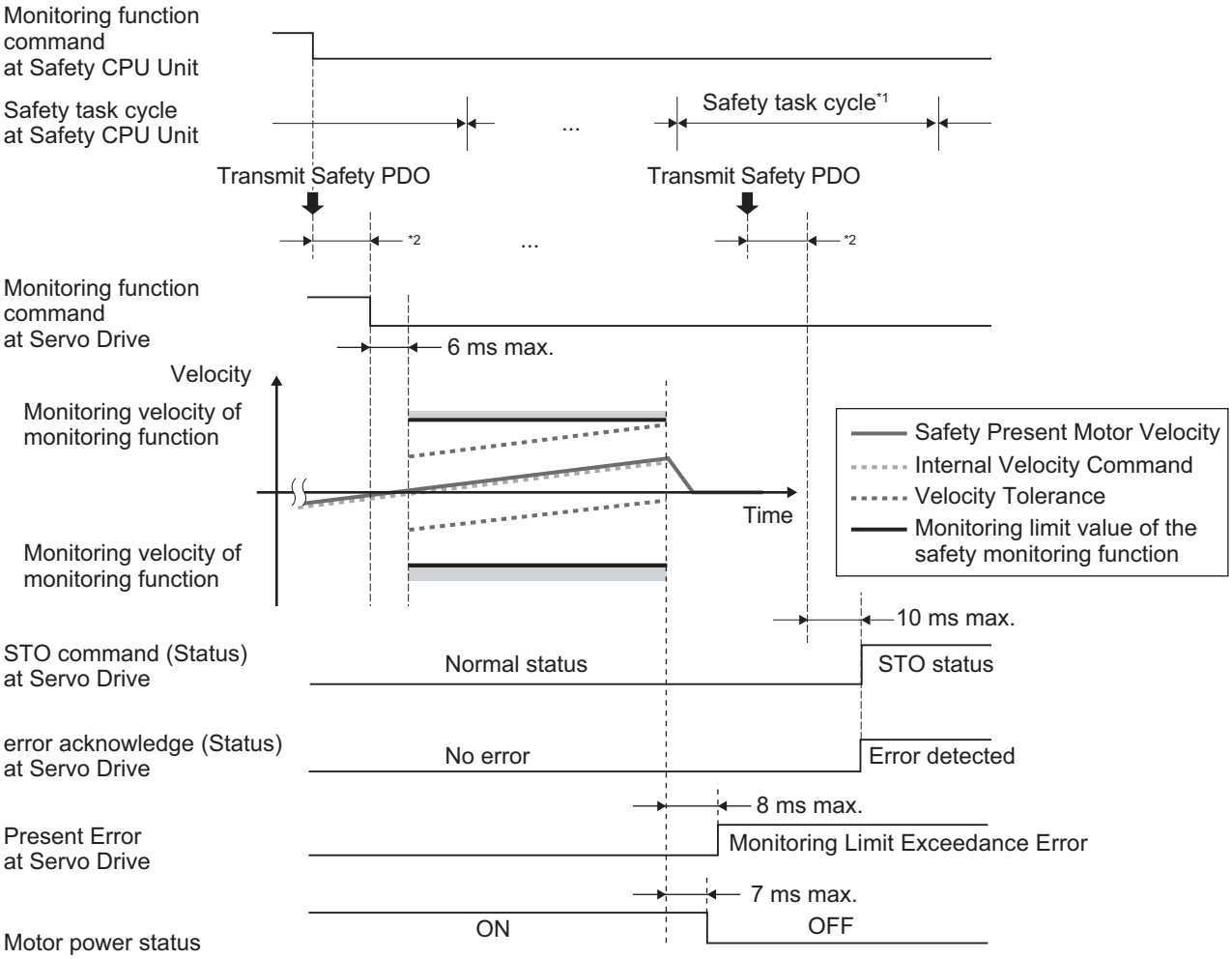

*1. As for safety task cycle, refer to *NX-series Safety Control Units User's Manual* (Cat. No. Z930).

*2. FSoE Communication Time.

Precautions for Correct Use

This function is interlocked with each safety monitoring function. When Safety Position/Velocity Validation Monitoring Function is in active, if the monitoring limit value of each safety monitoring function is set within the Position Tolerance or Velocity Tolerance, each safety monitoring function shows Monitoring Limit Exceedance Error (Error No. 71.03) all the time.

Make adjustment like reducing the maximum velocity during the operation.

9

Details on Servo Parameters

This section explains the details on each servo parameter, including the set values, settings, and the display.

9-1 Object Description Format 9-5

9-2 Common Control Objects 9-7

9-2-1 3000 hex: Basic Functions 9-7
9-2-2 3001 hex: Machine 9-13
9-2-3 3002 hex: Optimized Parameters 9-14
9-2-4 3010 hex: Position Command 9-16
9-2-5 3011 hex: Position Command Filter 9-18
9-2-6 3012 hex: Damping Control 9-19
9-2-7 3013 hex: Damping Filter 1 9-20
9-2-8 3014 hex: Damping Filter 2 9-21
9-2-9 3020 hex: Velocity Command 9-23
9-2-10 3021 hex: Velocity Command Filter 9-24
9-2-11 3030 hex: Torque Command 9-25
9-2-12 3031 hex: Velocity Limit in Torque Control 9-25
9-2-13 3040 hex: Profile Command 9-26
9-2-14 3041 hex: Command Dividing Function 9-27

9-3 Control Method Objects 9-29

9-3-1 3112 hex: ODF Velocity Feed-forward 9-29
9-3-2 3113 hex: ODF Torque Feed-forward 9-30
9-3-3 3120 hex: TDF Position Control 9-31
9-3-4 3121 hex: TDF Velocity Control 9-32

9-4 Control Loop Objects 9-34

9-4-1 3210 hex: Internal Position Command 9-34
9-4-2 3211 hex: Position Detection 9-35
9-4-3 3212 hex: Gain Switching in Position Control 9-35
9-4-4 3213 hex: 1st Position Control Gain 9-36
9-4-5 3214 hex: 2nd Position Control Gain 9-37
9-4-6 3220 hex: Internal Velocity Command 9-37
9-4-7 3221 hex: Velocity Detection 9-38
9-4-8 3222 hex: Gain Switching in Velocity Control 9-39
9-4-9 3223 hex: 1st Velocity Control Gain 9-39
9-4-10 3224 hex: 2nd Velocity Control Gain 9-40

9-4-11 3230 hex: Internal Torque Command 9-41
9-4-12 3231 hex: Torque Detection 9-41
9-4-13 3232 hex: Filter Switching in Torque Control 9-41
9-4-14 3233 hex: 1st Torque Command Filter 9-42
9-4-15 3234 hex: 2nd Torque Command Filter 9-43

9-5 Torque Output Setting Objects 9-44
9-5-1 3310 hex: Torque Compensation 9-44
9-5-2 3320 hex: Adaptive Notch Filter 9-46
9-5-3 3321 hex: 1st Notch Filter 9-47
9-5-4 3322 hex: 2nd Notch Filter 9-49
9-5-5 3323 hex: 3rd Notch Filter 9-51
9-5-6 3324 hex: 4th Notch Filter 9-53
9-5-7 3330 hex: Torque Limit 9-55

9-6 Homing Objects 9-57

9-7 Applied Function Objects 9-61
9-7-1 3B10 hex: Drive Prohibition 9-61
9-7-2 3B11 hex: Software Position Limit 9-62
9-7-3 3B20 hex: Stop Selection 9-64
9-7-4 3B21 hex: Deceleration Stop 9-66
9-7-5 3B30 hex: Touch Probe 1 9-67
9-7-6 3B31 hex: Touch Probe 2 9-70
9-7-7 3B40 hex: Zone Notification 1 9-71
9-7-8 3B41 hex: Zone Notification 2 9-72
9-7-9 3B50 hex: Position Detection Function 9-73
9-7-10 3B51 hex: Positioning Completion Notification 9-73
9-7-11 3B52 hex: Positioning Completion Notification 2 9-74
9-7-12 3B60 hex: Speed Detection Function 9-75
9-7-13 3B70 hex: Vibration Detection 9-76
9-7-14 3B71 hex: Runaway Detection 9-77
9-7-15 3B80 hex: Load Characteristic Estimation 9-78

9-8 Error- and Warning-related Objects 9-81
9-8-1 4000 hex: Error Full Code 9-81
9-8-2 4020 hex: Warning Customization 9-82
9-8-3 4021 hex: Warning Output 1 Setting 9-84
9-8-4 4022 hex: Warning Output 2 Setting 9-85
9-8-5 4030 hex: Information Customization 9-86

9-9 Monitoring-related Objects 9-87
9-9-1 4110 hex: Monitor Data via PDO 9-87
9-9-2 4120 hex: EtherCAT Communications Error Count 9-88
9-9-3 4130 hex: Safety Status Monitor 9-88
9-9-4 4131 hex: Safety Command Monitor 1 9-92
9-9-5 4132 hex: Safety Command Monitor 2 9-93
9-9-6 4140 hex: Lifetime Information 9-94
9-9-7 4150 hex: Overload 9-96

9-10 Display-related Objects 9-98

9-11 Power Device-related Objects 9-99
9-11-1 4310 hex: Regeneration 9-99
9-11-2 4320 hex: Main Circuit Power Supply 9-100

9-12 External Device-related Objects 9-102

9-13 Encoder-related Objects 9-104

9-14 I/O-related Objects 9-107
9-14-1 4600 hex: I/O Monitor 9-107
9-14-2 4601 hex: Function Input 9-108
9-14-3 4602 hex: Function Output 9-110
9-14-4 4604 hex: Control Input Change Count 9-111
9-14-5 4605 hex: Control Output Change Count 9-112
9-14-6 4610 hex: Brake Interlock Output 9-113
9-14-7 4620 hex: Encoder Dividing Pulse Output 9-114
9-15 General-purpose Input Setting Objects 9-116
9-15-1 Setting 9-116
9-15-2 4630 hex: Positive Drive Prohibition Input 9-117
9-15-3 4631 hex: Negative Drive Prohibition Input 9-117
9-15-4 4632 hex: External Latch Input 1 9-117
9-15-5 4633 hex: External Latch Input 2 9-118
9-15-6 4634 hex: Home Proximity Input 9-118
9-15-7 4635 hex: Positive Torque Limit Input 9-118
9-15-8 4636 hex: Negative Torque Limit Input 9-119
9-15-9 4637 hex: Error Stop Input 9-119
9-15-10 4638 hex: Monitor Input 1 9-119
9-15-11 4639 hex: Monitor Input 2 9-120
9-15-12 463A hex: Monitor Input 3 9-120
9-15-13 463B hex: Monitor Input 4 9-120
9-15-14 463C hex: Monitor Input 5 9-121
9-15-15 463D hex: Monitor Input 6 9-121
9-15-16 463E hex: Monitor Input 7 9-121
9-15-17 463F hex: Monitor Input 8 9-122
9-16 General-purpose Output Setting Objects 9-123
9-16-1 Setting 9-123
9-16-2 4650 hex: Error Output 9-124
9-16-3 4651 hex: Servo Ready Output 9-124
9-16-4 4652 hex: Positioning Completion Output 1 9-124
9-16-5 4653 hex: Positioning Completion Output 2 9-125
9-16-6 4654 hex: Velocity Attainment Detection Output 9-125
9-16-7 4655 hex: Torque Limit Output 9-125
9-16-8 4656 hex: Zero Speed Detection Output 9-126
9-16-9 4657 hex: Velocity Conformity Output 9-126
9-16-10 4658 hex: Warning Output 1 9-126
9-16-11 4659 hex: Warning Output 2 9-127
9-16-12 465A hex: Velocity Limiting Output 9-127
9-16-13 465B hex: Error Clear Attribute Output 9-127
9-16-14 465C hex: Remote Output 1 9-128
9-16-15 465D hex: Remote Output 2 9-128
9-16-16 465E hex: Remote Output 3 9-128
9-16-17 465F hex: Zone Notification Output 1 9-129
9-16-18 4660 hex: Zone Notification Output 2 9-129
9-16-19 4661 hex: Position Command Status Output 9-129
9-16-20 4662 hex: Distribution Completed Output 9-130
9-16-21 4663 hex: External Brake Interlock Output 9-130
9-17 Safety Related Object 9-132
9-17-1 4F00 hex: Safety Origin Position Setting 9-132
9-17-2 4F01 hex: Safety Position/Velocity Validation Monitoring Function 9-134
9-17-3 4F02 hex: Discrepancy Distance Measurement 9-135
9-17-4 4F03 hex: Safety Motor Rotation Direction Selection 9-136
9-17-5 4F08 hex: Safety Relay Activate 9-137

9-17-6 4F09 hex: Safety Relay OFF Delay Time 1 9-137
9-17-7 4F0A hex: Safety Relay OFF Delay Time 2 9-137
9-17-8 4F16 hex: Error Detection Activate In SLS Deactivate 9-138
9-17-9 4F18 hex: Safety Present Pulse Position 9-138
9-17-10 4F19 hex: Safety Present Position 9-139
9-17-11 4F1A hex: Safety Present Motor Velocity 9-139
9-17-12 4F20 hex: Safety Function Disable Setting 9-140

9-1 Object Description Format

The 1S-series Servo Drives with built-in EtherCAT communications use the servo parameters that are defined with objects. For information on the objects, refer to *1-1-3 Object Dictionary* on page 1-4.

In this manual, objects are described in the following format.

Index (hex)	Subindex (hex)	Object name	Setting range	Unit	Default setting	Data attri-bute	Size	Access	PDO map	Complete access	Modes of operation
<Index>	<Subindex>	<Object name>	<Range>	<Unit>	<Default>	<Attri-bute>	<Size>	<Access>	<PDO map>	<Complete access>	<Modes of operation>

Data is indicated in pointed brackets <>. Details on data are as follows.

Item	Description
Index	Object index given by a four-digit hexadecimal number.
Subindex	Object subindex given by a two-digit hexadecimal number.
Object name	The object name. For a subindex, the subindex name is given.
Setting range	Indicates the range of data that can be set for a writable object.
Unit	Physical units.
Default setting	Default value set before shipment.
Data attribute	The timing when a change in the contents is updated for a writable object. A: Always updated D: Possible to change only when the EtherCAT communications state is Pre-Operational S: Can be changed by safety controller setting tools. The changes are reflected when FSoE communication established. E: Servo ON R: Updated after the control power is reset or restarted –: Write prohibited
Size	Gives the object size.
Access	Indicates whether the object is to read only, or read and write. RO: Read only RW: Read and write (Saved in non-volatile memory) W: Read and write (Not saved in non-volatile memory)
PDO map	Indicates the PDO mapping attribute. RxPDO: Reception PDOs can be mapped TxPDO: Transmission PDOs can be mapped –: PDOs cannot be mapped
Complete access	Indicates whether Complete access is allowed or not.
Modes of operation	The profile mode in which the object is enabled. –: Independent of the Modes of operation csp: Cyclic synchronous position mode csv: Cyclic synchronous velocity mode cst: Cyclic synchronous torque mode pp: Profile position mode pv: Profile velocity mode hm: Homing mode

Mirror Objects

For 1S-series Servo Drives, a special object called “mirror object” is defined.

A mirror object enables access to the same object from different object numbers. Accessing the mirror object and accessing the original object cause the same operation.

More specifically, the mirror objects are used to assign the Servo Drive profile objects (index number 6000s) to the servo parameter objects (index number 3000s to 4000s).

9-2 Common Control Objects

This section explains the common control objects.

9-2-1 3000 hex: Basic Functions

Sets the basic functions of Servo Drives.

Index (hex)	Sub-index (hex)	Object name	Setting range	Unit	Default setting	Data attribute	Size	Access	PDO map	Complete access	Modes of operation
3000	---	Basic Functions	---	---	---	---	---	---	---	Possible	---
	00	Number of entries	---	---	FF hex	---	1 byte (U8)	RO	---	---	---
	01	Motor Rotation Direction Selection	0 to 1	---	1	R	4 bytes (INT32)	RW	---	---	csp, csv, cst, pp, pv, hm
	02	Control Mode Selection	---	---	0	---	4 bytes (INT32)	RO	---	---	csp, csv, cst, pp, pv, hm
	03	Control Method Selection	0 to 1	---	1	E	4 bytes (INT32)	RW	---	---	csp, csv, pp, pv
	04	Function Settings	---	---	00000001 hex	A	4 bytes (U32)	RW	---	---	---
	81	Function Status	---	---	---	---	4 bytes (U32)	RO	TxPDO	---	---
	82	Motor Stop Cause	---	---	---	---	4 bytes (INT32)	RO	---	---	---
	83	Modes of Operation Display	---	---	---	---	1 byte (INT8)	RO	---	---	csp, csv, cst, pp, pv, hm
	84	Supported Functions	---	---	00000001 hex	---	4 bytes (U32)	RO	---	---	---
	85	Supported Drive Modes	---	---	000003A5 hex	---	4 bytes (U32)	RO	---	---	---
	F1	Controlword	0000 to FFFF hex	---	0000 hex	A	2 bytes (U16)	W	---	---	csp, csv, cst, pp, pv, hm
	F2	Modes of Operation	0 to 10	---	0	A	1 byte (INT8)	W	---	---	csp, csv, cst, pp, pv, hm
	FF	Statusword	---	---	---	---	2 bytes (U16)	RO	---	---	csp, csv, cst, pp, pv, hm

Subindex 01 hex: Motor Rotation Direction Selection

- Selects the motor rotation direction for the command position.

● Description of Set Values

Set value	Description
0	A positive direction command sets the motor rotation to clockwise direction.
1	A positive direction command sets the motor rotation to counterclockwise direction.

- Regarding the rotation direction of the Servomotor, a clockwise rotation is defined as CW and a counterclockwise rotation is defined as CCW, when viewed from the load-side shaft.

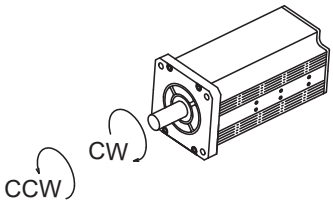

Subindex 02 hex: Control Mode Selection

- Selects the semi-closed control or the fully-closed control. For 1S-series Servo Drives, this object is fixed to *0* (fixed to semi-closed control).

Subindex 03 hex: Control Method Selection

- Switches the control method between TDF (two-degree-of-freedom) control and ODF (one-degree-of-freedom) control.

● Description of Set Values

Set value	Description
0	ODF control
1	TDF control

Subindex 04 hex: Function Settings

- Selects whether to enable or disable the extended functions which are supported by the Servo Drive.
- Mirror object of 60DA hex

● Description of Set Values

Set value	Description
Bit 0	Status Toggle 0: Disabled 1: Enabled
Bits 1 to 30	Reserved Always set to 0.
Bits 31	Reserved by system Always set to 0.

Subindex 81 hex: Function Status

- Gives the status of the Servo Drive.

Description of Set Values

Set value		Description
Bit 0		Origin Position (ZPOINT)
	0	Outside origin range
	1	Within origin range
Bit 1		Distribution Completed (DEN)
	0	Distribution not completed
	1	Distribution completed
Bit 2		Zero Speed Detected (ZSP)
	0	Zero speed not detected
	1	Zero speed detected
Bit 3		Torque Limit Applied (TLMT)
	0	Torque limit not applied
	1	Torque limit applied
Bit 4		Velocity Limit (VLMT)
	0	Velocity limit not applied
	1	Velocity limit applied
Bit 5		Positive Software Limit (PSOT)
	0	Within limit value
	1	Outside limit value
Bit 6		Negative Software Limit (NSOT)
	0	Within limit value
	1	Outside limit value
Bit 7		Velocity Conformity (VCMP)
	0	No velocity conformity
	1	Velocity conformity
Bit 8		Positioning Completion Output 2 (INP2)
	0	The present position is outside the range of Positioning Completion Output 2.
	1	The present position is within the range of Positioning Completion Output 2.
Bit 9		Velocity Attainment Detection Output (TGON)
	0	The motor velocity does not reach the velocity attainment detection value.
	1	The motor velocity reached the velocity attainment detection value.
Bit 10		Position Command Status Output (PCMD)
	0	Position command not changed
	1	Position command changed
Bit 11		Error Clear Attribute Output (ERR-ATB)*1
	0	An error which must be reset by the restart function (Control power supply OFF/ON, Unit Restart) exists.
	1	An error which can be reset exists.
Bit 12		Homing completion state
	0	Homing non-completion state
	1	Homing completion state

*1. The Error Clear Attribute Output (ERR-ATB) gives 0 when there is no error.

Subindex 82 hex: Motor Stop Cause

- Gives the failure cause when the motor does not rotate.
- If the value of a bit is *1*, the motor stop cause which corresponds to the bit is present.

● Description of Set Values

Bit	Description
0	Main circuit power supply not turned ON
1	Not Servo ON
2	Drive Prohibition state
3	Software Position Limit state
4	Position command variation is 0
5	Velocity command value is 0
6	Max profile velocity is 0
7	Torque command value is 0
8	Torque limit value is 0
9	Velocity Limit in Torque Control is 0
30*1	SBC is activated
31	STO status

*1. When FSoE communication is not established or SBC function is not used, a bit is 1.

Subindex 83 hex: Modes of Operation Display

- Gives the present mode of operation.
- Mirror object of 6061 hex

● Description of Set Values

Set value	Description
0	Not specified.
1	Profile position mode (pp)
3	Profile velocity mode (pv)
6	Homing mode (hm)
8	Cyclic synchronous position mode (csp)
9	Cyclic synchronous velocity mode (csv)
10	Cyclic synchronous torque mode (cst)

Subindex 84 hex: Supported Functions

- Gives the functions which are supported by the Servo Drive.
- Mirror object of 60D9 hex

● Description of Set Values

Set value	Description
Bit 0	Status Toggle 0: Disabled 1: Enabled
Bits 1 to 31	Reserved

Subindex 85 hex: Supported Drive Modes

- Gives the supported modes of operation.
- Mirror object of 6502 hex

Description of Set Values

Bit	Supported mode	Definition
0	pp (Profile position mode)	1: Supported
1	vl (Velocity mode)	0: Not supported
2	pv (Profile velocity mode)	1: Supported
3	tq (Profile torque mode)	0: Not supported
4	Reserved	0
5	hm (Homing mode)	1: Supported
6	ip (Interpolated position mode)	0: Not supported
7	csp (Cyclic synchronous position mode)	1: Supported
8	csv (Cyclic synchronous velocity mode)	1: Supported
9	cst (Cyclic synchronous torque mode)	1: Supported
10 to 31	Reserved	0

Subindex F1 hex: Controlword

- Controls the state machine of the Servo Drive (PDS).
- Mirror object of 6040-00 hex

Description of Set Values

Bit	Description
0	Switch on
1	Enable voltage
2	Quick stop
3	Enable operation
4 to 6	Operation mode specific
7	Fault reset
8	Halt
9	Operation mode specific
10	Reserved
11	P_CL
12	N_CL
13 to 15	Manufacturer specific

Subindex F2 hex: Modes of Operation

- Selects the Modes of operation.
- Mirror object of 6060 hex

● Description of Set Values

Set value	Description
0	Not specified.
1	Profile position mode (pp)
3	Profile velocity mode (pv)
6	Homing mode (hm)
8	Cyclic synchronous position mode (csp)
9	Cyclic synchronous velocity mode (csv)
10	Cyclic synchronous torque mode (cst)

Subindex FF hex: Statusword

- Gives the present status of the Servo Drive (PDS).
- Mirror object of 6041 hex

● Description of Set Values

Bit	Description
0	Ready to switch on
1	Switched on
2	Operation enabled
3	Fault
4	Voltage enabled
5	Quick Stop
6	Switch on disabled
7	Warning
8	Manufacturer specific
9	Remote
10	Operation mode specific
11	Internal limit active
12	Operation mode specific
13	Operation mode specific
14	Manufacturer specific
15	Manufacturer specific

9-2-2 3001 hex: Machine

Sets the mechanical system which is connected to the motor.

Index (hex)	Sub-index (hex)	Object name	Setting range	Unit	Default setting	Data attri-bute	Size	Access	PDO map	Complete access	Modes of oper-ation
3001	---	Machine	---	---	---	---	---	---	---	Possible	---
	00	Number of entries	---	---	81 hex	---	1 byte (U8)	RO	---	---	---
	01	Inertia Ratio	0 to 30,000	%	250	A	4 bytes (INT32)	RW	---	---	csp, csv, cst, pp, pv, hm
	02	Backlash Com-pensation Selection	0 to 2	---	0	R	4 bytes (INT32)	RW	---	---	csp, pp, hm
	03	Backlash Com-pensation Amount	-262,144 to 262,143	Com-mand unit	0	E	4 bytes (INT32)	RW	---	---	csp, pp, hm
	04	Backlash Com-pensation Time Constant	0 to 6,400	0.01 ms	0	E	4 bytes (INT32)	RW	---	---	csp, pp, hm
	05	Motor Revolu-tions	0 to 1,073,741,824	---	1	R	4 bytes (U32)	RW	---	---	csp, csv, cst, pp, pv, hm
	06	Shaft Revolu-tions	1 to 1,073,741,824	---	1	R	4 bytes (U32)	RW	---	---	csp, csv, cst, pp, pv, hm
	81	Inertia Ratio Display	---	%	---	---	4 bytes (INT32)	RO	---	---	csp, csv, cst, pp, pv, hm

Subindex 01 hex: Inertia Ratio

- Sets the ratio of load inertia to the motor rotor inertia.
- Inertia ratio = (Load inertia ÷ Rotor inertia) × 100%

Subindex 02 hex: Backlash Compensation Selection

- Selects whether to enable or disable backlash compensation in the position control, and the operation direction for the compensation.

● Description of Set Values

Set value	Description
0	Disabled
1	Compensate at the first positive operation after servo ON
2	Compensate at the first negative operation after servo ON

Subindex 03 hex: Backlash Compensation Amount

- Sets the backlash compensation amount in the position control.

Subindex 04 hex: Backlash Compensation Time Constant

- Sets the backlash compensation time constant in the position control. Refer to *7-5 Backlash Compensation* on page 7-20 for details.

Subindex 05 hex: Motor Revolutions

- Sets the numerator of the electronic gear.
- Mirror object of 6091-01hex

Subindex 06 hex: Shaft Revolutions

- Sets the denominator of the electronic gear.
- Mirror object of 6091-02hex
- Refer to *7-7 Electronic Gear Function* on page 7-29 for details.

Subindex 81 hex: Inertia Ratio Display

- Gives the inertia ratio that is currently set.
- The value is updated automatically when **Load Characteristic Estimation - Inertia Ratio Update Selection** (3B80-01 hex) is set to *1* (update with the estimation result).

9-2-3 3002 hex: Optimized Parameters

This object is used to copy values, which are calculated in the Servo Drive, to the user setting area.

Index (hex)	Sub-index (hex)	Object name	Setting range	Unit	Default setting	Data attri-bute	Size	Access	PDO map	Complete access	Modes of oper-ation
3002	---	Optimized Parameters	---	---	---	---	---	---	---	Possible	---
	00	Number of entries	---	---	FF hex	---	1 byte (U8)	RO	---	---	---
	F1	Apply Parame-ters	---	---	000000 00 hex	A	4 bytes (INT32)	W	---	---	---
	FF	Execution Sta-tus	---	---	---	---	4 bytes (INT32)	RO	---	---	---

Subindex F1 hex: Apply Parameters

- The optimized parameters of Servo Drive are copied to the user setting area by the writing of *7970 6F63* hex. They are used as user set values.
- To save the data in the non-volatile memory, execute the **Store Parameters** (1010-01 hex).
- The Optimized Parameters refer to the objects listed below. All these objects are copied.

Index (hex)	Name	Copy source		Copy destination	
		Sub-index (hex)	Name	Sub-index (hex)	Name
3001	Machine	81	Inertia Ratio Display	01	Inertia Ratio
3310	Torque Compensation	81	Viscous Friction Coefficient Display	01	Viscous Friction Coefficient
		82	Unbalanced Load Compensation Display	02	Unbalanced Load Compensation
		83	Positive Dynamic Friction Compensation Display	03	Positive Dynamic Friction Compensation
		84	Negative Dynamic Friction Compensation Display	04	Negative Dynamic Friction Compensation
3321	1st Notch Filter	81	Enable Display	01	Enable
		82	Frequency Display	02	Frequency
		83	Q-value Display	03	Q-value
		84	Depth Display	04	Depth
3322	2nd Notch Filter	81	Enable Display	01	Enable
		82	Frequency Display	02	Frequency
		83	Q-value Display	03	Q-value
		84	Depth Display	04	Depth
3323	3rd Notch Filter	81	Enable Display	01	Enable
		82	Frequency Display	02	Frequency
		83	Q-value Display	03	Q-value
		84	Depth Display	04	Depth
3324	4th Notch Filter	81	Enable Display	01	Enable
		82	Frequency Display	02	Frequency
		83	Q-value Display	03	Q-value
		84	Depth Display	04	Depth

Subindex FF hex: Execution Status

- Gives the execution status of whether the optimized parameters are applied.

● Description of Set Values

Set value	Description
0	Apply completed
1	Apply in execution

9-2-4 3010 hex: Position Command

Sets the position command and gives the command value.

Index (hex)	Sub-index (hex)	Object name	Setting range	Unit	Default setting	Data attri-bute	Size	Access	PDO map	Complete access	Modes of oper-ation
3010	---	Position Com-mand	---	---	---	---	---	---	---	Possible	---
	00	Number of entries	---	---	F2 hex	---	1 byte (U8)	RO	---	---	---
	81	Position Demand Value	---	Command unit	---	---	4 bytes (INT32)	RO	---	---	csp, pp, hm
	82	Position Demand Inter-nal Value	---	Encoder unit	---	---	4 bytes (INT32)	RO	---	---	csp, pp, hm
	83	Velocity	---	Command unit/s	---	---	4 bytes (INT32)	RO	---	---	csp, pp, hm
	84	Motor Velocity	---	r/min	---	---	4 bytes (INT32)	RO	---	---	csp, pp, hm
	85	Motor Velocity After Position Command Fil-tering	---	r/min	---	---	4 bytes (INT32)	RO	---	---	csp, pp, hm
	86	Motor Velocity After Damping Filtering	---	r/min	---	---	4 bytes (INT32)	RO	---	---	csp, pp, hm
	87	Reference Position for csp	---	Command unit	0	---	4 bytes (INT32)	RO	TxPDO	---	csp, csv, cst, pp, pv, hm
	91	Following Error	---	Command unit	---	---	4 bytes (INT32)	RO	---	---	csp, pp, hm
	F1	Target Position	-2,147,483, 648 to 2,147,483, 647	Command unit	0	A	4 bytes (INT32)	W	---	---	csp, pp
	F2	Position Offset	-2,147,483, 648 to 2,147,483, 647	Command unit	0	A	4 bytes (INT32)	W	---	---	csp

Subindex 81 hex: Position Demand Value

- Gives the command position which is generated in the Servo Drive, in units of command.
- Mirror object of 6062 hex

Subindex 82 hex: Position Demand Internal Value

- Gives the command position which is generated in the Servo Drive, in units of encoder.
- Mirror object of 60FC hex

Subindex 83 hex: Velocity

- Gives the command velocity which is generated in the Servo Drive, in units of command/s.

Subindex 84 hex: Motor Velocity

- Gives the command velocity which is generated in the Servo Drive, in units of r/min.

Subindex 85 hex: Motor Velocity After Position Command Filtering

- Gives the command velocity after position command filtering in units of r/min.

Subindex 86 hex: Motor Velocity After Damping Filtering

- Gives the command velocity after damping filtering, in units of r/min.

Subindex 87 hex: Reference Position for csp

- Gives the reference position for when the Cyclic synchronous velocity mode or Cyclic synchronous torque mode is switched to the Cyclic synchronous position mode.

Subindex 91 hex: Following Error

- Gives the following error between the command position and the present position.

Subindex F1 hex: Target Position

- Sets the command position in the Cyclic synchronous position mode (csp) and Profile position mode (pp).
- Mirror object of 607A hex

Subindex F2 hex: Position Offset

- Sets the offset for the Target position.
- Mirror object of 60B0 hex

9-2-5 3011 hex: Position Command Filter

Sets the position command filter.

The position command filter can be used when the communications cycle is 250 μs or more. When the communications cycle is 125 μs, the position command filter is disabled.

Index (hex)	Sub-index (hex)	Object name	Setting range	Unit	Default setting	Data attri-bute	Size	Access	PDO map	Complete access	Modes of operation
3011	---	Position Com-mand Filter	---	---	---	---	---	---	---	Possible	---
	00	Number of entries	---	---	04 hex	---	1 byte (U8)	RO	---	---	---
	01	FIR Filter Enable	0 to 1	---	0	A	4 bytes (INT32)	RW	---	---	csp, pp, hm
	02	FIR Filter Moving Average Time	1 to 10,000	0.1 ms	1	A	4 bytes (INT32)	RW	---	---	csp, pp, hm
	03	IIR Filter Enable	0 to 1	---	1	A	4 bytes (INT32)	RW	---	---	csp, pp, hm
	04	IIR Filter Cutoff Frequency	10 to 50,000	0.1 Hz	219	A	4 bytes (INT32)	RW	---	---	csp, pp, hm

Subindex 01 hex: FIR Filter Enable

- Selects whether to enable or disable the FIR filter in the position command filter.

● Description of Set Values

Set value	Description
0	Disabled
1	Enabled

Subindex 02 hex: FIR Filter Moving Average Time

- Sets the moving average time for the FIR filter.

Subindex 03 hex: IIR Filter Enable

- Selects whether to enable or disable the IIR filter in the position command filter.

● Description of Set Values

Set value	Description
0	Disabled
1	Enabled

Subindex 04 hex: IIR Filter Cutoff Frequency

- Sets the cutoff frequency for the IIR filter.

9-2-6 3012 hex: Damping Control

Selects the method to switch the damping filters.

Index (hex)	Sub-index (hex)	Object name	Setting range	Unit	Default setting	Data attri-bute	Size	Access	PDO map	Complete access	Modes of opera-tion
3012	---	Damping Control	---	---	---	---	---	---	---	Possible	---
	00	Number of entries	---	---	02 hex	---	1 byte (U8)	RO	---	---	---
	01	Damping Filter 1 Selection	0 to 4	---	0	A	4 bytes (INT32)	RW	---	---	csp, pp, hm
	02	Damping Filter 2 Selection	0 to 4	---	0	A	4 bytes (INT32)	RW	---	---	csp, pp, hm

Subindex 01 hex: Damping Filter 1 Selection

- Selects the setting to use for the damping filter 1.

● Description of Set Values

Set value	Description
0	Disabled
1	1st Frequency and 1st Damping Time Coefficient
2	2nd Frequency and 2nd Damping Time Coefficient
3	3rd Frequency and 3rd Damping Time Coefficient
4	4th Frequency and 4th Damping Time Coefficient

Subindex 02 hex: Damping Filter 2 Selection

- Selects the setting to use for the damping filter 2.

● Description of Set Values

Set value	Description
0	Disabled
1	1st Frequency and 1st Damping Time Coefficient
2	2nd Frequency and 2nd Damping Time Coefficient
3	3rd Frequency and 3rd Damping Time Coefficient
4	4th Frequency and 4th Damping Time Coefficient

9-2-7 3013 hex: Damping Filter 1

Sets the damping filter 1.

Index (hex)	Sub-index (hex)	Object name	Setting range	Unit	Default setting	Data attri-bute	Size	Access	PDO map	Complete access	Modes of opera-tion
3013	---	Damping Filter 1	---	---	---	---	---	---	---	Possible	---
	00	Number of entries	---	---	09 hex	---	1 byte (U8)	RO	---	---	---
	01	1st Frequency	5 to 3,000	0.1 Hz	3,000	A	4 bytes (INT32)	RW	---	---	csp, pp, hm
	02	1st Damping Time Coefficient	50 to 200	%	100	A	4 bytes (INT32)	RW	---	---	csp, pp, hm
	03	2nd Frequency	5 to 3,000	0.1 Hz	3,000	A	4 bytes (INT32)	RW	---	---	csp, pp, hm
	04	2nd Damping Time Coefficient	50 to 200	%	100	A	4 bytes (INT32)	RW	---	---	csp, pp, hm
	05	3rd Frequency	5 to 3,000	0.1 Hz	3,000	A	4 bytes (INT32)	RW	---	---	csp, pp, hm
	06	3rd Damping Time Coefficient	50 to 200	%	100	A	4 bytes (INT32)	RW	---	---	csp, pp, hm
	07	4th Frequency	5 to 3,000	0.1 Hz	3,000	A	4 bytes (INT32)	RW	---	---	csp, pp, hm
	08	4th Damping Time Coefficient	50 to 200	%	100	A	4 bytes (INT32)	RW	---	---	csp, pp, hm

Subindex 01 hex: 1st Frequency

- Sets the damping frequency 1 for the damping filter 1.

Subindex 02 hex: 1st Damping Time Coefficient

- Sets the trade-off with torque required for the vibration suppression time and damping. Setting a small value shortens the time to suppress the vibration, however it is highly possible that torque saturation occurs.

Subindex 03 hex: 2nd Frequency

- Sets the damping frequency 2 for the damping filter 1.

Subindex 04 hex: 2nd Damping Time Coefficient

- Sets the trade-off with torque required for the vibration suppression time and damping. Setting a small value shortens the time to suppress the vibration, however it is highly possible that torque saturation occurs.

Subindex 05 hex: 3rd Frequency

- Sets the damping frequency 3 for the damping filter 1.

Subindex 06 hex: 3rd Damping Time Coefficient

- Sets the trade-off with torque required for the vibration suppression time and damping. Setting a small value shortens the time to suppress the vibration, however it is highly possible that torque saturation occurs.

Subindex 07 hex: 4th Frequency

- Sets the damping frequency 4 for the damping filter 1.

Subindex 08 hex: 4th Damping Time Coefficient

- Sets the trade-off with torque required for the vibration suppression time and damping. Setting a small value shortens the time to suppress the vibration, however it is highly possible that torque saturation occurs.

9-2-8 3014 hex: Damping Filter 2

Sets the damping filter 2.

Index (hex)	Sub-index (hex)	Object name	Setting range	Unit	Default setting	Data attri-bute	Size	Access	PDO map	Complete access	Modes of opera-tion
3014	---	Damping Filter 2	---	---	---	---	---	---	---	Possible	---
	00	Number of entries	---	---	09 hex	---	1 byte (U8)	RO	---	---	---
	01	1st Frequency	5 to 3,000	0.1 Hz	3,000	A	4 bytes (INT32)	RW	---	---	csp, pp, hm
	02	1st Damping Time Coefficient	1 to 200	%	100	A	4 bytes (INT32)	RW	---	---	csp, pp, hm
	03	2nd Frequency	5 to 3,000	0.1 Hz	3,000	A	4 bytes (INT32)	RW	---	---	csp, pp, hm
	04	2nd Damping Time Coefficient	1 to 200	%	100	A	4 bytes (INT32)	RW	---	---	csp, pp, hm
	05	3rd Frequency	5 to 3,000	0.1 Hz	3,000	A	4 bytes (INT32)	RW	---	---	csp, pp, hm
	06	3rd Damping Time Coefficient	1 to 200	%	100	A	4 bytes (INT32)	RW	---	---	csp, pp, hm
	07	4th Frequency	5 to 3,000	0.1 Hz	3,000	A	4 bytes (INT32)	RW	---	---	csp, pp, hm
	08	4th Damping Time Coefficient	1 to 200	%	100	A	4 bytes (INT32)	RW	---	---	csp, pp, hm

Subindex 01 hex: 1st Frequency

- Sets the damping frequency 1 for the damping filter 2.

Subindex 02 hex: 1st Damping Time Coefficient

- Sets the trade-off with torque required for the vibration suppression time and damping. Setting a small value shortens the time to suppress the vibration, however it is highly possible that torque saturation occurs.

Subindex 03 hex: 2nd Frequency

- Sets the damping frequency 2 for the damping filter 2.

Subindex 04 hex: 2nd Damping Time Coefficient

- Sets the trade-off with torque required for the vibration suppression time and damping. Setting a small value shortens the time to suppress the vibration, however it is highly possible that torque saturation occurs.

Subindex 05 hex: 3rd Frequency

- Sets the damping frequency 3 for the damping filter 2.

Subindex 06 hex: 3rd Damping Time Coefficient

- Sets the trade-off with torque required for the vibration suppression time and damping. Setting a small value shortens the time to suppress the vibration, however it is highly possible that torque saturation occurs.

Subindex 07 hex: 4th Frequency

- Sets the damping frequency 4 for the damping filter 2.

Subindex 08 hex: 4th Damping Time Coefficient

- Sets the trade-off with torque required for the vibration suppression time and damping. Setting a small value shortens the time to suppress the vibration, however it is highly possible that torque saturation occurs.

9-2-9 3020 hex: Velocity Command

Sets the velocity command and gives the command value.

Index (hex)	Sub-index (hex)	Object name	Setting range	Unit	Default setting	Data attri-bute	Size	Access	PDO map	Complete access	Modes of oper-ation
3020	---	Velocity Com-mand	---	---	---	---	---	---	---	Possible	---
	00	Number of entries	---	---	F2 hex	---	1 byte (U8)	RO	---	---	---
	82	Motor Velocity	---	r/min	---	---	4 bytes (INT32)	RO	---	---	csv, pv
	83	Motor Velocity After Velocity Command Filter-ing	---	r/min	---	---	4 bytes (INT32)	RO	---	---	csv, pv
	92	Motor Velocity Deviation	---	r/min	---	---	4 bytes (INT32)	RO	---	---	csv, pv
	F1	Target Velocity	-2,147,483,648 to 2,147,483,647	Command unit/s	0	A	4 bytes (INT32)	W	---	---	csv, pv
	F2	Velocity Offset	-2,147,483,648 to 2,147,483,647	Command unit/s	0	A	4 bytes (INT32)	W	---	---	csp, csv, pp, pv

Subindex 82 hex: Motor Velocity

- Gives the velocity command which is generated in the Servo Drive.

Subindex 83 hex: Motor Velocity After Velocity Command Filtering

- Gives the command velocity after velocity command filtering.

Subindex 92 hex: Motor Velocity Deviation

- Gives the deviation between the command velocity and the present velocity.

Subindex F1 hex: Target Velocity

- Sets the command velocity for the Cyclic synchronous velocity mode (csv) and Profile velocity mode (pv).
- Mirror object of 60FF hex

Subindex F2 hex: Velocity Offset

- Sets the offset for the Target velocity.
- Mirror object of 60B1 hex

9-2-10 3021 hex: Velocity Command Filter

Sets the velocity command filter.

Index (hex)	Sub-index (hex)	Object name	Setting range	Unit	Default setting	Data attri-bute	Size	Access	PDO map	Complete access	Modes of opera-tion
3021	---	Velocity Com-mand Filter	---	---	---	---	---	---	---	Possible	---
	00	Number of entries	---	---	04 hex	---	1 byte (U8)	RO	---	---	---
	01	Acceleration Time	0 to 10,000	ms	0	E	4 bytes (INT32)	RW	---	---	csv, pv
	02	Deceleration Time	0 to 10,000	ms	0	E	4 bytes (INT32)	RW	---	---	csv, pv
	03	IIR Filter Enable	0 to 1	---	0	A	4 bytes (INT32)	RW	---	---	csv, pv
	04	Filter Cutoff Fre-quency	10 to 50,000	0.1 Hz	50,000	E	4 bytes (INT32)	RW	---	---	csv, pv

Subindex 01 hex: Acceleration Time

- Sets the acceleration time during acceleration.
- Sets the time to accelerate from 0 to 1,000 r/min.

Subindex 02 hex: Deceleration Time

- Sets the deceleration time during deceleration.
- Sets the time to decelerate from 1,000 to 0 r/min.

Subindex 03 hex: IIR Filter Enable

- Selects whether to enable or disable the IIR filter in the velocity command filter.

● Description of Set Values

Set value	Description
0	Disabled
1	Enabled

Subindex 04 hex: Filter Cutoff Frequency

- Sets the cutoff frequency for the IIR filter.

9-2-11 3030 hex: Torque Command

Sets the torque command and gives the command value.

Index (hex)	Sub-index (hex)	Object name	Setting range	Unit	Default setting	Data attri-bute	Size	Access	PDO map	Complete access	Modes of operation
3030	---	Torque Com-mand	---	---	---	---	---	---	---	Possible	---
	00	Number of entries	---	---	F2 hex	---	1 byte (U8)	RO	---	---	---
	81	Torque	---	0.1%	---	---	4 bytes (INT32)	RO	---	---	cst
	F1	Target Torque	-5,000 to 5,000	0.1%	0	A	2 bytes (INT16)	W	---	---	cst
	F2	Torque Offset	-5,000 to 5,000	0.1%	0	A	2 bytes (INT16)	W	---	---	csp, csv, cst, pp, pv

Subindex 81 hex: Torque

- Gives the torque command value which is generated in the Servo Drive.

Subindex F1 hex: Target Torque

- Sets the torque command in the Cyclic synchronous torque mode.
- Mirror object of 6071 hex

Subindex F2 hex: Torque Offset

- Sets the offset for the Target torque.
- Mirror object of 60B2 hex

9-2-12 3031 hex: Velocity Limit in Torque Control

Sets the velocity limit in the torque control.

Index (hex)	Sub-index (hex)	Object name	Setting range	Unit	Default setting	Data attri-bute	Size	Access	PDO map	Complete access	Modes of opera-tion
3031	---	Velocity Limit in Torque Control	---	---	---	---	---	---	---	Possible	---
	00	Number of entries	---	---	81 hex	---	1 byte (U8)	RO	---	---	---
	01	Velocity Limit Value	0 to 20,000	r/min	20,000	A	4 bytes (INT32)	RW	---	---	cst
	81	Status	---	---	---	---	4 bytes (INT32)	RO	---	---	cst

Subindex 01 hex: Velocity Limit Value

- Sets the velocity limit in the torque control.

Subindex 81 hex: Status

- Gives the velocity limit status in the torque control.

Description of Set Values

Set value	Description
0	Velocity limit not applied
1	Velocity limit applied

9-2-13 3040 hex: Profile Command

Sets the profile command.

Index (hex)	Sub-index (hex)	Object name	Setting range	Unit	Default setting	Data attribute	Size	Access	PDO map	Complete access	Modes of operation
3040	---	Profile Command	---	---	---	---	---	---	---	Possible	---
	00	Number of entries	---	---	F4 hex	---	1 byte (U8)	RO	---	---	---
	F1	Max Profile Velocity	0 to 2,147,483,647	Command unit/s	2,147,483,647	A	4 bytes (U32)	W	---	---	cst, pp, pv
	F2	Profile Velocity	0 to 2,147,483,647	Command unit/s	0	A	4 bytes (U32)	W	---	---	pp
	F3	Profile Acceleration	1 to 2,147,483,647	Command unit/s^2	125,000	A	4 bytes (U32)	W	---	---	pp, pv
	F4	Profile Deceleration	1 to 2,147,483,647	Command unit/s^2	125,000	A	4 bytes (U32)	W	---	---	pp, pv

Subindex F1 hex: Max Profile Velocity

- Sets the velocity limit value in the Cyclic synchronous torque mode (cst), Profile position mode (pp), and Profile velocity mode (pv).
- Mirror object of 607F hex

Subindex F2 hex: Profile Velocity

- Sets the velocity in the Profile position mode (pp).
- Mirror object of 6081 hex

Subindex F3 hex: Profile Acceleration

- Sets the acceleration rate in the Profile position mode (pp) and Profile velocity mode (pv).
- Mirror object of 6083 hex

Subindex F4 hex: Profile Deceleration

- Sets the deceleration rate in the Profile position mode (pp) and Profile velocity mode (pv).
- Mirror object of 6084 hex

9-2-14 3041 hex: Command Dividing Function

Sets the Command Dividing Function which is enabled in the Cyclic synchronous position mode (csp) or Cyclic synchronous velocity mode (csv).

In the free-run mode only, the setting is updated, and in the synchronous mode, the DC cycle time is automatically applied as the interpolation time period.

Interpolation time period = **Interpolation Time Period Value** ×10 (Interpolation Time Index) seconds.

Index (hex)	Sub-index (hex)	Object name	Setting range	Unit	Default setting	Data attri-bute	Size	Access	PDO map	Complete access	Modes of operation
3041	---	Command Divid-ing Function	---	---	---	---	---	---	---	Possible	---
	00	Number of entries	---	---	16	---	1 byte (U8)	RO	---	---	---
	01	Operation Selec-tion in csv	0 to 1	---	0	R	4 bytes (INT32)	RW	---	---	csv
	02	Interpolation Time Period Value	0 to 255	---	1	E	1 byte (U8)	RW	---	---	csp, csv
	03	Interpolation Time Index	-128 to 63	---	-3	E	1 byte (INT8)	RW	---	---	csp, csv
	10	Interpolation Method Selec-tion in csp	0 to 1	---	0	A	4 bytes (INT32)	RW	---	---	csp

Subindex 01 hex: Operation Selection in csv

- Selects whether to enable or disable the Command Dividing Function in the Cyclic synchronous velocity mode (csv).

● Description of Set Values

Set value	Description
0	Disabled
1	Enabled

Subindex 02 hex: Interpolation Time Period Value

- Sets the value of the interpolation time period.
- Mirror object of 60C2-01 hex

Subindex 03 hex: Interpolation Time Index

- Sets the index of the interpolation time index period.
- Mirror object of 60C2-02 hex

Subindex 10 hex: Interpolation Method Selection in csp

- Selects the interpolation method for the command in the Cyclic synchronous position mode (csp).

Description of Set Values

Set value	Description
0	1st Order Interpolation
1	2nd Order Interpolation

9-3 Control Method Objects

This section explains the objects that set the operations in the one-degree-of-freedom and two-degree-of-freedom controls.

9-3-1 3112 hex: ODF Velocity Feed-forward

Sets the velocity feed-forward in the one-degree-of-freedom control.

Index (hex)	Sub-index (hex)	Object name	Setting range	Unit	Default setting	Data attri-bute	Size	Access	PDO map	Complete access	Modes of operation
3112	---	ODF Velocity Feed-forward	---	---	---	---	---	---	---	Possible	---
	00	Number of entries	---	---	E2 hex	---	1 byte (U8)	RO	---	---	---
	01	Gain	0 to 1,000	0.1%	300	A	4 bytes (INT32)	RW	---	---	csp, pp, hm
	02	LPF Enable	0 to 1	---	1	A	4 bytes (INT32)	RW	---	---	csp, pp, hm
	03	LPF Cutoff Fre-quency	10 to 50,000	0.1 Hz	50,000	A	4 bytes (INT32)	RW	---	---	csp, pp, hm
	E1	Gain Command	0 to 1,000	0.1%	300	A	4 bytes (INT32)	W	RxPDO	---	csp, pp, hm
	E2	LPF Cutoff Fre-quency Com-mand	10 to 50,000	0.1 Hz	50,000	A	4 bytes (INT32)	W	RxPDO	---	csp, pp, hm

Subindex 01 hex: Gain

- Sets the one-degree-of-freedom velocity feed-forward gain.
- The velocity feed-forward can reduce a following error and improve the responsiveness during posi-tion control.
- Although the following ability is improved by the increase in gain, overshooting may occur in some cases.

Subindex 02 hex: LPF Enable

- Selects whether to enable or disable the low-pass filter in the velocity feed-forward.

● Description of Set Values

Set value	Description
0	Disabled
1	Enabled

Subindex 03 hex: LPF Cutoff Frequency

- Sets the low-pass filter cutoff frequency in the one-degree-of-freedom velocity feed-forward filter.

Subindex E1 hex: Gain Command

- Sets the one-degree-of-freedom velocity feed-forward gain.
- The velocity feed-forward can reduce a following error and improve the responsiveness during position control.
- Although the following ability is improved by the increase in gain, overshooting may occur in some cases.
- This object is intended for PDO assignment. Use this object to change the **Gain** (subindex 01 hex) from a PDO.

Subindex E2 hex: LPF Cutoff Frequency Command

- Sets the low-pass filter cutoff frequency in the one-degree-of-freedom velocity feed-forward filter.
- This object is intended for PDO assignment. Use this object to change the **LPF Cutoff Frequency** (subindex 03 hex) from a PDO.

9-3-2 3113 hex: ODF Torque Feed-forward

Sets the torque feed-forward in the one-degree-of-freedom control.

Index (hex)	Sub-index (hex)	Object name	Setting range	Unit	Default setting	Data attribute	Size	Access	PDO map	Complete access	Modes of operation
3113	---	ODF Torque Feed-forward	---	---	---	---	---	---	---	Possible	---
	00	Number of entries	---	---	E2 hex	---	1 byte (U8)	RO	---	---	---
	01	Gain	0 to 1,000	0.1%	0	A	4 bytes (INT32)	RW	---	---	csp, pp, hm
	02	LPF Enable	0 to 1	---	0	A	4 bytes (INT32)	RW	---	---	csp, pp, hm
	03	LPF Cutoff Frequency	10 to 50,000	0.1 Hz	50,000	A	4 bytes (INT32)	RW	---	---	csp, pp, hm
	E1	Gain Command	0 to 1,000	0.1%	---	A	4 bytes (INT32)	W	RxPDO	---	csp, pp, hm
	E2	LPF Cutoff Frequency Command	10 to 50,000	0.1 Hz	---	A	4 bytes (INT32)	W	RxPDO	---	csp, pp, hm

Subindex 01 hex: Gain

- Sets the one-degree-of-freedom torque feed-forward gain.
- The torque feed-forward can improve the responsiveness of the velocity control system.
- Although the following ability is improved by the increase in gain, overshooting may occur in some cases.
- Usually, activate the low pass filter and use it.

Subindex 02 hex: LPF Enable

- Selects whether to enable or disable the low-pass filter in the torque feed-forward.

● Description of Set Values

Set value	Description
0	Disabled
1	Enabled

Subindex 03 hex: LPF Cutoff Frequency

- Sets the low-pass filter cutoff frequency for the one-degree-of-freedom torque feed-forward.

Subindex E1 hex: Gain Command

- Sets the one-degree-of-freedom torque feed-forward gain.
- The torque feed-forward can improve the responsiveness of the velocity control system.
- Although the following ability is improved by the increase in gain, overshooting may occur in some cases.
- This object is intended for PDO assignment. Use this object to change the **Gain** (subindex 01 hex) from a PDO.

Subindex E2 hex: LPF Cutoff Frequency Command

- Sets the low-pass filter cutoff frequency for the one-degree-of-freedom torque feed-forward.
- This object is intended for PDO assignment. Use this object to change the **LPF Cutoff Frequency** (subindex 03 hex) from a PDO.

9-3-3 3120 hex: TDF Position Control

Sets the operation in the two-degree-of-freedom position control.

Index (hex)	Sub-index (hex)	Object name	Setting range	Unit	Default setting	Data attri-bute	Size	Access	PDO map	Complete access	Modes of operation
3120	---	TDF Position Control	---	---	---	---	---	---	---	Possible	---
	00	Number of entries	---	---	11 hex	---	1 byte (U8)	RO	---	---	---
	01	Command Fol-lowing Gain	10 to 5,000	%	50	A	4 bytes (INT32)	RW	---	---	csp, pp, hm
	10	Command Fol-lowing Gain Selection	0 to 1	---	0	A	4 bytes (INT32)	RW	---	---	csp, pp, hm
	11	Command Fol-lowing Gain 2	1 to 50,000	0.1 Hz	219	A	4 bytes (INT32)	RW	---	---	csp, pp, hm

Subindex 01 hex: Command Following Gain

- Sets the following performance for the target position.
- The higher the gain is, the higher the following performance of the internal command is for the target position.
- The set value is valid when **TDF Position Control** - **Command Following Gain Selection** (3120-10 hex) is set to 0 (use the Command Following Gain).

Subindex 10 hex: Command Following Gain Selection

- Selects the command following gain switching method.

● Description of Set Values

Set value	Description
0	Use the Command Following Gain.
1	Use the Command Following Gain 2.

Subindex 11 hex: Command Following Gain 2

- Sets the cutoff frequency to the position command.
- The higher the set value is, the higher the following performance of the internal command is for the target position.
- The set value is valid when **TDF Position Control** - **Command Following Gain Selection** (3120-10 hex) is set to 1 (use the Command Following Gain 2).

9-3-4 3121 hex: TDF Velocity Control

Sets the operation in the two-degree-of-freedom velocity control.

Index (hex)	Sub-index (hex)	Object name	Setting range	Unit	Default setting	Data attri-bute	Size	Access	PDO map	Complete access	Modes of operation
3121	---	TDF Velocity Control	---	---	---	---	---	---	---	Possible	---
	00	Number of entries	---	---	11 hex	---	1 byte (U8)	RO	---	---	---
	01	Command Fol-lowing Gain	10 to 5,000	%	100	A	4 bytes (INT32)	RW	---	---	csv, pv
	10	Command Fol-lowing Gain Selection	0 to 1	---	0	A	4 bytes (INT32)	RW	---	---	csv, pv
	11	Command Fol-lowing Gain 2	1 to 50,000	0.1 Hz	219	A	4 bytes (INT32)	RW	---	---	csv, pv

Subindex 01 hex: Command Following Gain

- Sets the following performance for the target velocity.
- The higher the gain is, the higher the following performance of the internal command is for the target velocity.
- The set value is valid when **TDF Velocity Control - Command Following Gain Selection** (3120-10 hex) is set to 0 (use the Command Following Gain).

Subindex 10 hex: Command Following Gain Selection

- Selects the command following gain switching method.

● Description of Set Values

Set value	Description
0	Use the Command Following Gain.
1	Use the Command Following Gain 2.

Subindex 11 hex: Command Following Gain 2

- Sets the cutoff frequency to the velocity command.
- The higher the set value is, the higher the following performance of the internal command is for the target velocity.
- The set value is valid when **TDF Velocity Control - Command Following Gain Selection** (3120-10 hex) is set to 1 (use the Command Following Gain 2).

9-4 Control Loop Objects

This section explains the objects related to the control loop.

9-4-1 3210 hex: Internal Position Command

Gives the position command value which is calculated in the Servo Drive.

Index (hex)	Sub-index (hex)	Object name	Set-ting range	Unit	Default setting	Data attri-bute	Size	Access	PDO map	Complete access	Modes of operation
3210	---	Internal Position Command	---	---	---	---	---	---	---	Possible	---
	00	Number of entries	---	---	92 hex	---	1 byte (U8)	RO	---	---	---
	81	Position	---	Command unit	---	---	4 bytes (INT32)	RO	---	---	csp, pp, hm
	84	Motor Velocity	---	r/min	---	---	4 bytes (INT32)	RO	---	---	csp, pp, hm
	91	Following Error Actual Value	---	Command unit	---	---	4 bytes (INT32)	RO	---	---	csp, pp, hm
	92	Following Error Actual Internal Value	---	Encoder unit	---	---	4 bytes (INT32)	RO	---	---	csp, pp, hm

Subindex 81 hex: Position

- Gives the command position to the feedback control in units of command.

Subindex 84 hex: Motor Velocity

- Gives the command velocity to the feedback control in units of r/min.

Subindex 91 hex: Following Error Actual Value

- Gives the following error between the command position to the feedback control and the present position in units of command.
- Mirror object of 60F4 hex

Subindex 92 hex: Following Error Actual Internal Value

- Gives the following error between the command position to the feedback control and the present position in units of encoder.

9-4-2 3211 hex: Position Detection

Gives the position detection value.

Index (hex)	Sub-index (hex)	Object name	Setting range	Unit	Default setting	Data attri-bute	Size	Access	PDO map	Complete access	Modes of opera-tion
3211	---	Position Detec-tion	---	---	---	---	---	---	---	Possible	---
	00	Number of entries	---	---	83 hex	---	1 byte (U8)	RO	---	---	---
	81	Position Actual Value	---	Com-mand unit	---	---	4 bytes (INT32)	RO	---	---	csp, csv, cst, pp, pv, hm
	82	Position Actual Internal Value	---	Encoder unit	---	---	4 bytes (INT32)	RO	---	---	csp, csv, cst, pp, pv, hm
	83	Present Position Time Stamp	---	ns	---	---	8 bytes (U64)	RO	TxPDO	---	csp, csv, cst, pp, pv, hm

Subindex 81 hex: Position Actual Value

- Gives the present position in units of command.
- Mirror object of 6064 hex

Subindex 82 hex: Position Actual Internal Value

- Gives the present position in units of encoder.
- Mirror object of 6063 hex

Subindex 83 hex: Present Position Time Stamp

- Gives the time when the present position is obtained.

9-4-3 3212 hex: Gain Switching in Position Control

Sets the gain switching function in the position control.

Index (hex)	Sub-index (hex)	Object name	Setting range	Unit	Default setting	Data attri-bute	Size	Access	PDO map	Complete access	Modes of opera-tion
3212	---	Gain Switching in Position Control	---	---	---	---	---	---	---	Possible	---
	00	Number of entries	---	---	04 hex	---	1 byte (U8)	RO	---	---	---
	01	Mode Selection	0 to 3	---	0	E	4 bytes (INT32)	RW	---	---	csp, pp, hm
	02	Delay Time	0 to 10,000	0.1 ms	50	E	4 bytes (INT32)	RW	---	---	csp, pp, hm
	03	Speed	0 to 20,000	r/min	50	E	4 bytes (INT32)	RW	---	---	csp, pp, hm
	04	Time	0 to 10,000	0.1 ms	100	E	4 bytes (INT32)	RW	---	---	csp, pp, hm

Subindex 01 hex: Mode Selection

- Selects the method to switch the gain in the position control.

● Description of Set Values

Set value	Description
0	Always Gain 1
1	Always Gain 2
2	Gain switching command input via EtherCAT communications
3	Actual motor velocity with position command

Subindex 02 hex: Delay Time

- Sets the delay time when the gain returns from Gain 2 to Gain 1 if the **Mode Selection** is set to *3*.

Subindex 03 hex: Speed

- Sets the speed threshold for when Gain 2 switches to Gain 1 if the **Mode Selection** is set to *3*.

Subindex 04 hex: Time

- Sets the time to change the gain from a high value to a low value.

9-4-4 3213 hex: 1st Position Control Gain

Sets the 1st position control gain.

Index (hex)	Sub-index (hex)	Object name	Setting range	Unit	Default setting	Data attri-bute	Size	Access	PDO map	Complete access	Modes of opera-tion
3213	---	1st Position Con-trol Gain	---	---	---	---	---	---	---	Possible	---
	00	Number of entries	---	---	E1 hex	---	1 byte (U8)	RO	---	---	---
	01	Proportional Gain	0 to 5,000	0.1 Hz	44	A	4 bytes (INT32)	RW	---	---	csp, pp, hm
	E1	Proportional Gain Command	0 to 5,000	0.1 Hz	44	A	4 bytes (INT32)	W	RxPDO	---	csp, pp, hm

Subindex 01 hex: Proportional Gain

- Sets the 1st position proportional gain.

Subindex E1 hex: Proportional Gain Command

- Sets the 1st position proportional gain.
- This object is intended for PDO assignment. Use this object to change the **Proportional Gain** (subindex 01 hex) from a PDO.

9-4-5 3214 hex: 2nd Position Control Gain

Sets the 2nd position control gain.

Index (hex)	Sub-index (hex)	Object name	Setting range	Unit	Default setting	Data attri-bute	Size	Access	PDO map	Complete access	Modes of opera-tion
3214	---	2nd Position Control Gain	---	---	---	---	---	---	---	Possible	---
	00	Number of entries	---	---	01 hex	---	1 byte (U8)	RO	---	---	---
	01	Proportional Gain	0 to 5,000	0.1 Hz	44	A	4 bytes (INT32)	RW	---	---	csp, pp, hm
	E1	Proportional Gain Command	0 to 5,000	0.1 Hz	44	A	4 bytes (INT32)	W	RxPDO	---	csp, pp, hm

Subindex 01 hex: Proportional Gain

- Sets the 2nd position proportional gain.

Subindex E1 hex: Proportional Gain Command

- Sets the 2nd position proportional gain.
- This object is intended for PDO assignment. Use this object to change the **Proportional Gain** (subindex 01 hex) from a PDO.

9-4-6 3220 hex: Internal Velocity Command

Gives the velocity command value in the Servo Drive.

Index (hex)	Sub-index (hex)	Object name	Setting range	Unit	Default setting	Data attri-bute	Size	Access	PDO map	Complete access	Modes of oper-ation
3220	---	Internal Velocity Command	---	---	---	---	---	---	---	Possible	---
	00	Number of entries	---	---	92 hex	---	1 byte (U8)	RO	---	---	---
	81	Velocity Demand Value	---	Command unit/s	---	---	4 bytes (INT32)	RO	---	---	csp, pp, hm
	82	Motor Velocity	---	r/min	---	---	4 bytes (INT32)	RO	---	---	csp, csv, hm, pp, pv
	83	Control Effort	---	Command unit/s	---	---	4 bytes (INT32)	RO	---	---	csp, pp, hm
	92	Motor Velocity Deviation	---	r/min	---	---	4 bytes (INT32)	RO	---	---	csp, csv, hm, pp, pv

Subindex 81 hex: Velocity Demand Value

- Gives the command velocity which is generated in the Servo Drive, in units of command/s.
- The displayed value may have an error due to the unit conversion from [r/min] to [command unit/s].
- Mirror object of 606B hex

Subindex 82 hex: Motor Velocity

- Gives the command velocity which is generated in the Servo Drive, in units of r/min.

Subindex 83 hex: Control Effort

- Gives the velocity command value which is generated in the position control of the Servo Drive.
- The displayed value may have an error due to the unit conversion from [r/min] to [command unit/s].
- Mirror object of 60FA hex

Subindex 92 hex: Motor Velocity Deviation

- Gives the deviation between the command velocity to the feedback control and the present velocity.

9-4-7 3221 hex: Velocity Detection

Gives the velocity detection value.

Index (hex)	Sub-index (hex)	Object name	Setting range	Unit	Default setting	Data attri-bute	Size	Access	PDO map	Complete access	Modes of oper-ation
3221	---	Velocity Detec-tion	---	---	---	---	---	---	---	Possible	---
	00	Number of entries	---	---	83 hex	---	1 byte (U8)	RO	---	---	---
	81	Velocity Actual Value	---	Command unit/s	---	---	4 bytes (INT32)	RO	---	---	csp, csv, cst, pp, pv, hm
	82	Present Motor Velocity	---	r/min	---	---	4 bytes (INT32)	RO	TxPDO	---	csp, csv, cst, pp, pv, hm
	83	Acceleration	---	rad/s^2	---	---	4 bytes (INT32)	RO	---	---	csp, csv, cst, pp, pv, hm

Subindex 81 hex: Velocity Actual Value

- Gives the present velocity in units of command/s.
- Mirror object of 606C hex

Subindex 82 hex: Present Motor Velocity

- Gives the present motor velocity in units of r/min.

Subindex 83 hex: Acceleration

- Gives the motor acceleration.

9-4-8 3222 hex: Gain Switching in Velocity Control

Sets the gain switching function in the velocity control.

Index (hex)	Sub-index (hex)	Object name	Setting range	Unit	Default setting	Data attri-bute	Size	Access	PDO map	Complete access	Modes of operation
3222	---	Gain Switching in Velocity Control	---	---	---	---	---	---	---	Possible	---
	00	Number of entries	---	---	01 hex	---	1 byte (U8)	RO	---	---	---
	01	Mode Selection	0 to 2	---	0	E	4 bytes (INT32)	RW	---	---	csv, pv

Subindex 01 hex: Mode Selection

- Selects the gain switching function in the velocity control.

● Description of Set Values

Set value	Description
0	Always Gain 1
1	Always Gain 2
2	Gain switching command input via EtherCAT communications

9-4-9 3223 hex: 1st Velocity Control Gain

Sets the 1st velocity control gain.

Index (hex)	Sub-index (hex)	Object name	Setting range	Unit	Default setting	Data attri-bute	Size	Access	PDO map	Complete access	Modes of opera-tion
3223	---	1st Velocity Con-trol Gain	---	---	---	---	---	---	---	Possible	---
	00	Number of entries	---	---	E2 hex	---	1 byte (U8)	RO	---	---	---
	01	Proportional Gain	0 to 30,000	0.1 Hz	219	A	4 bytes (INT32)	RW	---	---	csv, pv
	02	Integral Gain	0 to 16,000	0.1 Hz	55	A	4 bytes (INT32)	RW	---	---	csv, pv
	E1	Proportional Gain Command	0 to 30,000	0.1 Hz	219	A	4 bytes (INT32)	W	RxPDO	---	csv, pv
	E2	Integral Gain Command	0 to 16,000	0.1 Hz	55	A	4 bytes (INT32)	W	RxPDO	---	csv, pv

Subindex 01 hex: Proportional Gain

- Sets the 1st velocity proportional gain.

Subindex 02 hex: Integral Gain

- Sets the 1st velocity integral gain.

Subindex E1 hex: Proportional Gain Command

- Sets the 1st velocity proportional gain.
- This object is intended for PDO assignment. Use this object to change the propotional gain from a PDO.

Subindex E2 hex: Integral Gain Command

- Sets the 1st velocity integral gain.
- This object is intended for PDO assignment. Use this object to change the integral gain from a PDO.

9-4-10 3224 hex: 2nd Velocity Control Gain

Sets the 2nd velocity control gain.

Index (hex)	Sub-index (hex)	Object name	Setting range	Unit	Default setting	Data attri-bute	Size	Access	PDO map	Complete access	Modes of opera-tion
3224	---	2nd Velocity Con-trol Gain	---	---	---	---	---	---	---	Possible	---
	00	Number of entries	---	---	E2 hex	---	1 byte (U8)	RO	---	---	---
	01	Proportional Gain	0 to 30,000	0.1 Hz	219	A	4 bytes (INT32)	RW	---	---	csv, pv
	02	Integral Gain	0 to 16,000	0.1 Hz	55	A	4 bytes (INT32)	RW	---	---	csv, pv
	E1	Proportional Gain Command	0 to 30,000	0.1 Hz	219	A	4 bytes (INT32)	W	RxPDO	---	csv, pv
	E2	Integral Gain Command	0 to 16,000	0.1 Hz	55	A	4 bytes (INT32)	W	RxPDO	---	csv, pv

Subindex 01 hex: Proportional Gain

- Sets the 2nd velocity proportional gain.

Subindex 02 hex: Integral Gain

- Sets the 2nd velocity integral gain.

Subindex E1 hex: Proportional Gain Command

- Sets the 2nd velocity proportional gain.
- This object is intended for PDO assignment. Use this object to change the propotional gain from a PDO.

Subindex E2 hex: Integral Gain Command

- Sets the 2nd velocity integral gain.
- This object is intended for PDO assignment. Use this object to change the integral gain from a PDO.

9-4-11 3230 hex: Internal Torque Command

Gives the internal torque command value.

Index (hex)	Sub-index (hex)	Object name	Setting range	Unit	Default setting	Data attri-bute	Size	Access	PDO map	Complete access	Modes of opera-tion
3230	---	Internal Torque Command	---	---	---	---	---	---	---	Possible	---
	00	Number of entries	---	---	81 hex	---	1 byte (U8)	RO	---	---	---
	81	Torque Demand	---	0.1%	---	---	2 bytes (INT16)	R	---	---	csp, csv, cst, pp, pv, hm

Subindex 81 hex: Torque Demand

- Gives the torque command value which is generated in the Servo Drive.
- Mirror object of 6074 hex

9-4-12 3231 hex: Torque Detection

Gives the torque detection value.

Index (hex)	Sub-index (hex)	Object name	Setting range	Unit	Default setting	Data attri-bute	Size	Access	PDO map	Complete access	Modes of opera-tion
3231	---	Torque Detection	---	---	---	---	---	---	---	Possible	---
	00	Number of entries	---	---	81 hex	---	1 byte (U8)	RO	---	---	---
	81	Torque Actual Value	---	0.1%	---	---	2 bytes (INT16)	R	---	---	csp, csv, cst, pp, pv, hm

Subindex 81 hex: Torque Actual Value

- Gives the present torque value.
- Mirror object of 6077 hex

9-4-13 3232 hex: Filter Switching in Torque Control

Sets the filter switching function in the torque control.

Index (hex)	Sub-index (hex)	Object name	Setting range	Unit	Default setting	Data attri-bute	Size	Access	PDO map	Complete access	Modes of opera-tion
3232	---	Filter Switching in Torque Control	---	---	---	---	---	---	---	Possible	---
	00	Number of entries	---	---	01 hex	---	1 byte (U8)	RO	---	---	---
	01	Mode Selection	0 to 2	---	0	E	4 bytes (INT32)	RW	---	---	cst

Subindex 01 hex: Mode Selection

- Selects the condition to switch between 1st torque filter and 2nd torque filter.

● Description of Set Values

Set value	Description
0	Always 1st Filter
1	Always 2nd Filter
2	Gain switching command input via EtherCAT communications

9-4-14 3233 hex: 1st Torque Command Filter

Sets the 1st torque command filter.

Index (hex)	Sub-index (hex)	Object name	Setting range	Unit	Default setting	Data attri-bute	Size	Access	PDO map	Complete access	Modes of opera-tion
3233	---	1st Torque Com-mand Filter	---	---	---	---	---	---	---	Possible	---
	00	Number of entries	---	---	E1 hex	---	1 byte (U8)	RO	---	---	---
	01	Enable	0 to 1	---	1	A	4 bytes (INT32)	RW	---	---	csp, csv, cst, pp, pv, hm
	02	Cutoff Frequency	10 to 50,000	0.1 Hz	1,536	A	4 bytes (INT32)	RW	---	---	csp, csv, cst, pp, pv, hm
	E1	Cutoff Fre-quency Com-mand	10 to 50,000	0.1 Hz	1,536	A	4 bytes (INT32)	W	RxPDO	---	csp, csv, cst, pp, pv, hm

Subindex 01 hex: Enable

- Selects whether to enable or disable the 1st torque command filter.

● Description of Set Values

Set value	Description
0	Disabled
1	Enable

Subindex 02 hex: Cutoff Frequency

- Sets the cutoff frequency for the 1st torque command filter.

Subindex E1 hex: Cutoff Frequency Command

- Sets the cutoff frequency for the 1st torque command filter.
- This object is intended for PDO assignment. Use this object to change the Cutoff Frequency from a PDO.

9-4-15 3234 hex: 2nd Torque Command Filter

Sets the 2nd torque command filter.

Index (hex)	Sub-index (hex)	Object name	Setting range	Unit	Default setting	Data attri-bute	Size	Access	PDO map	Complete access	Modes of opera-tion
3234	---	2nd Torque Command Filter	---	---	---	---	---	---	---	Possible	---
	00	Number of entries	---	---	E1 hex	---	1 byte (U8)	RO	---	---	---
	01	Enable	0 to 1	---	1	A	4 bytes (INT32)	RW	---	---	csp, csv, cst, pp, pv, hm
	02	Cutoff Fre-quency	10 to 50,000	0.1 Hz	1,536	A	4 bytes (INT32)	RW	---	---	csp, csv, cst, pp, pv, hm
	E1	Cutoff Fre-quency Com-mand	10 to 50,000	0.1 Hz	1,536	A	4 bytes (INT32)	W	RxPDO	---	csp, csv, cst, pp, pv, hm

Subindex 01 hex: Enable

- Selects whether to enable or disable the 2nd torque command filter.

● Description of Set Values

Set value	Description
0	Disabled
1	Enabled

Subindex 02 hex: Cutoff Frequency

- Sets the cutoff frequency for the 2nd torque command filter.

Subindex E1 hex: Cutoff Frequency Command

- Sets the cutoff frequency for the 2nd torque command filter.
- This object is intended for PDO assignment. Use this object to change the Cutoff Frequency from a PDO.

9-5 Torque Output Setting Objects

These objects are used for the torque output setting.

9-5-1 3310 hex: Torque Compensation

Sets the torque compensation.

Index (hex)	Sub-index (hex)	Object name	Setting range	Unit	Default setting	Data attri-bute	Size	Access	PDO map	Complete access	Modes of opera-tion
3310	---	Torque Compen-sation	---	---	---	---	---	---	---	Possible	---
	00	Number of entries	---	---	84 hex	---	1 byte (U8)	RO	---	---	---
	01	Viscous Friction Coefficient	0 to 10,000	0.1%	0	A	4 bytes (INT32)	RW	---	---	csp, csv, cst, pp, pv, hm
	02	Unbalanced Load Compensa-tion	-1,000 to 1,000	0.1%	0	A	4 bytes (INT32)	RW	---	---	csp, csv, cst, pp, pv, hm
	03	Positive Dynamic Friction Compen-sation	0 to 1,000	0.1%	0	A	4 bytes (INT32)	RW	---	---	csp, csv, cst, pp, pv, hm
	04	Negative Dynamic Friction Compensation	0 to 1,000	0.1%	0	A	4 bytes (INT32)	RW	---	---	csp, csv, cst, pp, pv, hm
	81	Viscous Friction Coefficient Dis-play	---	0.1%	---	---	4 bytes (INT32)	RO	---	---	csp, csv, cst, pp, pv, hm
	82	Unbalanced Load Compensa-tion Display	---	0.1%	---	---	4 bytes (INT32)	RO	---	---	csp, csv, cst, pp, pv, hm
	83	Positive Dynamic Friction Compen-sation Display	---	0.1%	---	---	4 bytes (INT32)	RO	---	---	csp, csv, cst, pp, pv, hm
	84	Negative Dynamic Friction Compensation Display	---	0.1%	---	---	4 bytes (INT32)	RO	---	---	csp, csv, cst, pp, pv, hm

Subindex 01 hex: Viscous Friction Coefficient

- Adjusts the amount of viscous friction compensation torque.
- Sets the amount of torque at 10,000 r/min.

Subindex 02 hex: Unbalanced Load Compensation

- Sets the amount of unbalanced load torque compensation.

Subindex 03 hex: Positive Dynamic Friction Compensation

- Sets the amount of dynamic friction compensation in the positive direction.

Subindex 04 hex: Negative Dynamic Friction Compensation

- Sets the amount of dynamic friction compensation in the negative direction.

Subindex 81 hex: Viscous Friction Coefficient Display

- Gives the amount of viscous friction compensation torque that is currently set.
- The value is updated automatically when **Load Characteristic Estimation** – **Viscous Friction Compensation Update Selection** (3B80-02 hex) is set to *1* (update with the estimation result).

Subindex 82 hex: Unbalanced Load Compensation Display

- Gives the amount of unbalanced load torque compensation that is currently set.
- The value is updated automatically when **Load Characteristic Estimation** – **Unbalanced Load Compensation Update Selection** (3B80-03 hex) is set to *1* (update with the estimation result).

Subindex 83 hex: Positive Dynamic Friction Compensation Display

- Gives the amount of dynamic friction compensation in the positive direction that is currently set.
- The value is updated automatically when **Load Characteristic Estimation** – **Dynamic Friction Compensation Update Selection** (3B80-04 hex) is set to *1* (update with the estimation result).

Subindex 84 hex: Negative Dynamic Friction Compensation Display

- Gives the amount of dynamic friction compensation in the negative direction that is currently set.
- The value is updated automatically when **Load Characteristic Estimation** – **Dynamic Friction Compensation Update Selection** (3B80-04 hex) is set to *1* (update with the estimation result).

9-5-2 3320 hex: Adaptive Notch Filter

Sets the adaptive notch filter.

Index (hex)	Sub-index (hex)	Object name	Setting range	Unit	Default setting	Data attri-bute	Size	Access	PDO map	Complete access	Modes of opera-tion
3320	---	Adaptive Notch Filter	---	---	---	---	---	---	---	Possible	---
	00	Number of entries	---	---	04 hex	---	1 byte (U8)	RO	---	---	---
	01	Adaptive Notch Selection	0 to 4	---	0	A	4 bytes (INT32)	RW	---	---	csp, csv, cst, pp, pv, hm
	03	Resonance Detection Threshold	0 to 500	%	4	A	4 bytes (INT32)	RW	---	---	csp, csv, cst, pp, pv, hm

Subindex 01 hex: Adaptive Notch Selection

- Selects the notch filter to adapt the estimation result. This object is disabled when 0 is set.

● Description of Set Values

Set value	Description
0	Disabled
1	1st Notch Filter
2	2nd Notch Filter
3	3rd Notch Filter
4	4th Notch Filter

Subindex 03 hex: Resonance Detection Threshold

- Sets the torque output to detect the resonance, as a percentage of the rated torque.

9-5-3 3321 hex: 1st Notch Filter

Sets the 1st resonance suppression notch filter.

Index (hex)	Sub-index (hex)	Object name	Setting range	Unit	Default setting	Data attri-bute	Size	Access	PDO map	Complete access	Modes of opera-tion
3321	---	1st Notch Filter	---	---	---	---	---	---	---	Possible	---
	00	Number of entries	---	---	84 hex	---	1 byte (U8)	RO	---	---	---
	01	Enable	0 to 1	---	0	A	4 bytes (INT32)	RW	---	---	csp, csv, cst, pp, pv, hm
	02	Frequency	500 to 50,000	0.1 Hz	50,000	A	4 bytes (INT32)	RW	---	---	csp, csv, cst, pp, pv, hm
	03	Q-value	50 to 1,000	0.01	140	A	4 bytes (INT32)	RW	---	---	csp, csv, cst, pp, pv, hm
	04	Depth	0 to 60	dB	60	A	4 bytes (INT32)	RW	---	---	csp, csv, cst, pp, pv, hm
	81	Enable Display	---	---	---	---	4 bytes (INT32)	RO	---	---	csp, csv, cst, pp, pv, hm
	82	Frequency Dis-play	---	0.1 Hz	---	---	4 bytes (INT32)	RO	---	---	csp, csv, cst, pp, pv, hm
	83	Q-value Display	---	0.01	---	---	4 bytes (INT32)	RO	---	---	csp, csv, cst, pp, pv, hm
	84	Depth Display	---	dB	---	---	4 bytes (INT32)	RO	---	---	csp, csv, cst, pp, pv, hm

Subindex 01 hex: Enable

- Selects whether to enable or disable the 1st notch filter function.

● Description of Set Values

Set value	Description
0	Disabled
1	Enabled

Subindex 02 hex: Frequency

- Sets the notch frequency of the 1st resonance suppression notch filter.

Subindex 03 hex: Q-value

- Sets the Q-value of the 1st resonance suppression notch filter.
- Decreasing the setting value widens the notch width.

Subindex 04 hex: Depth

- Sets the notch depth of the 1st resonance suppression notch filter.
- Increasing the setting value lengthens the notch depth and the phase lag.

Subindex 81 hex: Enable Display

- Gives whether the 1st notch filter function is enabled or disabled.

● Description of Set Values

Set value	Description
0	Disabled
1	Enabled

Subindex 82 hex: Frequency Display

- Gives the notch frequency that is currently set in the 1st notch filter.
- The value is updated automatically when the notch filter is specified in **Adaptive Notch Filter** – **Adaptive Notch Selection** (3320-01 hex).

Subindex 83 hex: Q-value Display

- Gives the Q-value that is currently set in the 1st notch filter.
- The value is updated automatically when the notch filter is specified in **Adaptive Notch Filter** – **Adaptive Notch Selection** (3320-01 hex).

Subindex 84 hex: Depth Display

- Gives the depth that is currently set in the 1st notch filter.
- The value is updated automatically when the notch filter is specified in **Adaptive Notch Filter** – **Adaptive Notch Selection** (3320-01 hex).

9-5-4 3322 hex: 2nd Notch Filter

Sets the 2nd resonance suppression notch filter.

Index (hex)	Sub-index (hex)	Object name	Setting range	Unit	Default setting	Data attri-bute	Size	Access	PDO map	Complete access	Modes of opera-tion
3322	---	2nd Notch Filter	---	---	---	---	---	---	---	Possible	---
	00	Number of entries	---	---	84 hex	---	1 byte (U8)	RO	---	---	---
	01	Enable	0 to 1	---	0	A	4 bytes (INT32)	RW	---	---	csp, csv, cst, pp, pv, hm
	02	Frequency	500 to 50,000	0.1 Hz	50,000	A	4 bytes (INT32)	RW	---	---	csp, csv, cst, pp, pv, hm
	03	Q-value	50 to 1,000	0.01	140	A	4 bytes (INT32)	RW	---	---	csp, csv, cst, pp, pv, hm
	04	Depth	0 to 60	dB	60	A	4 bytes (INT32)	RW	---	---	csp, csv, cst, pp, pv, hm
	81	Enable Display	---	---	---	---	4 bytes (INT32)	RO	---	---	csp, csv, cst, pp, pv, hm
	82	Frequency Dis-play	---	0.1 Hz	---	---	4 bytes (INT32)	RO	---	---	csp, csv, cst, pp, pv, hm
	83	Q-value Display	---	0.01	---	---	4 bytes (INT32)	RO	---	---	csp, csv, cst, pp, pv, hm
	84	Depth Display	---	dB	---	---	4 bytes (INT32)	RO	---	---	csp, csv, cst, pp, pv, hm

Subindex 01 hex: Enable

- Selects whether to enable or disable the 2nd notch filter function.

● Description of Set Values

Set value	Description
0	Disabled
1	Enabled

Subindex 02 hex: Frequency

- Sets the notch frequency of the 2nd resonance suppression notch filter.

Subindex 03 hex: Q-value

- Sets the Q-value of the 2nd resonance suppression notch filter.
- Decreasing the setting value widens the notch width.

Subindex 04 hex: Depth

- Sets the notch depth of the 2nd resonance suppression notch filter.
- Increasing the setting value lengthens the notch depth and the phase lag.

Subindex 81 hex: Enable Display

- Gives whether the 2nd notch filter function is enabled or disabled.

● Description of Set Values

Set value	Description
0	Disabled
1	Enabled

Subindex 82 hex: Frequency Display

- Gives the notch frequency that is currently set in the 2nd notch filter.
- The value is updated automatically when the notch filter is specified in **Adaptive Notch Filter** – **Adaptive Notch Selection** (3320-01 hex).

Subindex 83 hex: Q-value Display

- Gives the Q-value that is currently set in the 2nd notch filter.
- The value is updated automatically when the notch filter is specified in **Adaptive Notch Filter** – **Adaptive Notch Selection** (3320-01 hex).

Subindex 84 hex: Depth Display

- Gives the depth that is currently set in the 2nd notch filter.
- The value is updated automatically when the notch filter is specified in **Adaptive Notch Filter** – **Adaptive Notch Selection** (3320-01 hex).

9-5-5 3323 hex: 3rd Notch Filter

Sets the 3rd resonance suppression notch filter.

Index (hex)	Sub-index (hex)	Object name	Setting range	Unit	Default setting	Data attri-bute	Size	Access	PDO map	Complete access	Modes of operation
3323	---	3rd Notch Filter	---	---	---	---	---	---	---	Possible	---
	00	Number of entries	---	---	84 hex	---	1 byte (U8)	RO	---	---	---
	01	Enable	0 to 1	---	0	A	4 bytes (INT32)	RW	---	---	csp, csv, cst, pp, pv, hm
	02	Frequency	500 to 50,000	0.1 Hz	50,000	A	4 bytes (INT32)	RW	---	---	csp, csv, cst, pp, pv, hm
	03	Q-value	50 to 1,000	0.01	140	A	4 bytes (INT32)	RW	---	---	csp, csv, cst, pp, pv, hm
	04	Depth	0 to 60	dB	60	A	4 bytes (INT32)	RW	---	---	csp, csv, cst, pp, pv, hm
	81	Enable Display	---	---	---	---	4 bytes (INT32)	RO	---	---	csp, csv, cst, pp, pv, hm
	82	Frequency Dis-play	---	0.1 Hz	---	---	4 bytes (INT32)	RO	---	---	csp, csv, cst, pp, pv, hm
	83	Q-value Display	---	0.01	---	---	4 bytes (INT32)	RO	---	---	csp, csv, cst, pp, pv, hm
	84	Depth Display	---	dB	---	---	4 bytes (INT32)	RO	---	---	csp, csv, cst, pp, pv, hm

Subindex 01 hex: Enable

- Selects whether to enable or disable the 3rd notch filter function.

● Description of Set Values

Set value	Description
0	Disabled
1	Enabled

Subindex 02 hex: Frequency

- Sets the notch frequency of the 3rd resonance suppression notch filter.

Subindex 03 hex: Q-value

- Sets the Q-value of the 3rd resonance suppression notch filter.
- Decreasing the setting value widens the notch width.

Subindex 04 hex: Depth

- Sets the notch depth of the 3rd resonance suppression notch filter.
- Increasing the setting value lengthens the notch depth and the phase lag.

Subindex 81 hex: Enable Display

- Gives whether the 3rd notch filter function is enabled or disabled.

● Description of Set Values

Set value	Description
0	Disabled
1	Enabled

Subindex 82 hex: Frequency Display

- Gives the notch frequency that is currently set in the 3rd notch filter.
- The value is updated automatically when the notch filter is specified in **Adaptive Notch Filter** – **Adaptive Notch Selection** (3320-01 hex).

Subindex 83 hex: Q-value Display

- Gives the Q-value that is currently set in the 3rd notch filter.
- The value is updated automatically when the notch filter is specified in **Adaptive Notch Filter** – **Adaptive Notch Selection** (3320-01 hex).

Subindex 84 hex: Depth Display

- Gives the depth that is currently set in the 3rd notch filter.
- The value is updated automatically when the notch filter is specified in **Adaptive Notch Filter** – **Adaptive Notch Selection** (3320-01 hex).

9-5-6 3324 hex: 4th Notch Filter

Sets the 4th resonance suppression notch filter.

Index (hex)	Sub-index (hex)	Object name	Setting range	Unit	Default setting	Data attri-bute	Size	Access	PDO map	Complete access	Modes of opera-tion
3324	---	4th Notch Filter	---	---	---	---	---	---	---	Possible	---
	00	Number of entries	---	---	84 hex	---	1 byte (U8)	RO	---	---	---
	01	Enable	0 to 1	---	0	A	4 bytes (INT32)	RW	---	---	csp, csv, cst, pp, pv, hm
	02	Frequency	500 to 50,000	0.1 Hz	50,000	A	4 bytes (INT32)	RW	---	---	csp, csv, cst, pp, pv, hm
	03	Q-value	50 to 1,000	0.01	140	A	4 bytes (INT32)	RW	---	---	csp, csv, cst, pp, pv, hm
	04	Depth	0 to 60	dB	60	A	4 bytes (INT32)	RW	---	---	csp, csv, cst, pp, pv, hm
	81	Enable Display	---	---	---	---	4 bytes (INT32)	RO	---	---	csp, csv, cst, pp, pv, hm
	82	Frequency Dis-play	---	0.1 Hz	---	---	4 bytes (INT32)	RO	---	---	csp, csv, cst, pp, pv, hm
	83	Q-value Display	---	0.01	---	---	4 bytes (INT32)	RO	---	---	csp, csv, cst, pp, pv, hm
	84	Depth Display	---	dB	---	---	4 bytes (INT32)	RO	---	---	csp, csv, cst, pp, pv, hm

Subindex 01 hex: Enable

- Selects whether to enable or disable the 4th notch filter function.

● Description of Set Values

Set value	Description
0	Disabled
1	Enabled

Subindex 02 hex: Frequency

- Sets the notch frequency of the 4th resonance suppression notch filter.

Subindex 03 hex: Q-value

- Sets the Q-value of the 4th resonance suppression notch filter.
- Decreasing the setting value widens the notch width.

Subindex 04 hex: Depth

- Sets the notch depth of the 4th resonance suppression notch filter.
- Increasing the setting value lengthens the notch depth and the phase lag.

Subindex 81 hex: Enable Display

- Gives whether the 4th notch filter function is enabled or disabled.

● Description of Set Values

Set value	Description
0	Disabled
1	Enabled

Subindex 82 hex: Frequency Display

- Gives the notch frequency that is currently set in the 4th notch filter.
- The value is updated automatically when the notch filter is specified in **Adaptive Notch Filter** – **Adaptive Notch Selection** (3320-01 hex).

Subindex 83 hex: Q-value Display

- Gives the Q-value that is currently set in the 4th notch filter.
- The value is updated automatically when the notch filter is specified in **Adaptive Notch Filter** – **Adaptive Notch Selection** (3320-01 hex).

Subindex 84 hex: Depth Display

- Gives the depth that is currently set in the 4th notch filter.
- The value is updated automatically when the notch filter is specified in **Adaptive Notch Filter** – **Adaptive Notch Selection** (3320-01 hex).

9-5-7 3330 hex: Torque Limit

Sets the torque limit function.

Index (hex)	Sub-index (hex)	Object name	Setting range	Unit	Default setting	Data attri-bute	Size	Access	PDO map	Complete access	Modes of opera-tion
3330	---	Torque Limit	---	---	---	---	---	---	---	Possible	---
	00	Number of entries	---	---	81 hex	---	1 byte (U8)	RO	---	---	---
	01	Switching Selec-tion	0 to 2	---	0	A	4 bytes (INT32)	RW	---	---	cst
	02	Max Torque	0 to 5,000	0.1%	5,000	A	2 bytes (U16)	RW	-	-	csp, csv, cst, pp, pv, hm
	03	Positive Torque Limit Value	0 to 5,000	0.1%	5,000	A	2 bytes (U16)	RW	---	---	csp, csv, cst, pp, pv, hm
	04	Negative Torque Limit Value	0 to 5,000	0.1%	5,000	A	2 bytes (U16)	RW	---	---	csp, csv, cst, pp, pv, hm
	05	Positive Torque Limit Value 2	0 to 5,000	0.1%	5,000	A	2 bytes (U16)	RW	---	---	csp, csv, cst, pp, pv, hm
	06	Negative torque limit value 2	0 to 5,000	0.1%	5,000	A	2 bytes (U16)	RW	-	-	csp, csv, cst, pp, pv, hm
	81	Status	---	---	---	---	4 bytes (INT32)	RO	---	---	csp, csv, cst, pp, pv, hm

Subindex 01 hex: Switching Selection

- Selects the torque limit switching method.
- When 1 or 2 is set, positive and negative torque limit values vary with state of the torque limit input (PCL/NCL) and Controlword (P_CL/N_CL).
- When the maximum torque value is smaller than the other torque limit values, it is used as the limit value.

● Description of Set Values

Set value	Description
0	Switching by PCL/NCL signal is not allowed. Use the Positive torque limit value and Negative torque limit value.
1	Use the Positive Torque Limit Value 2 when both of the torque limit input (PCL) and Control-word (P_CL) are OFF, and the Positive Torque Limit Value for the other combinations. If both the torque limit input (NCL) and Controlword (N_CL) are OFF, the Negative torque limit value 2 is used. In other cases, the Negative torque limit value is used.
2	Use the Positive Torque Limit Value when both of the torque limit input (PCL) and Controlword (P_CL) are OFF, and the Positive Torque Limit Value 2 for the other combinations. If both the torque limit input (NCL) and Controlword (N_CL) are OFF, the Negative torque limit value is used. In other cases, the Negative torque limit value 2 is used.

Subindex 02 hex: Max Torque

- Sets the maximum torque limit value. The function of this object is the same as the **Max torque** (6072 hex). Set this object when you use a limit value without mapping 6072 hex to a PDO.

Subindex 03 hex: Positive Torque Limit Value

- Sets the positive torque limit value.
- The function of this object is the same as the **Positive torque limit value** (60E0 hex). Set this object when you use the limit value without mapping 60E0 hex to a PDO.

Subindex 04 hex: Negative Torque Limit Value

- Sets the negative torque limit value.
- The function of this object is the same as the **Negative torque limit value** (60E1 hex). Set this object when you use the limit value without mapping 60E1 hex to a PDO.

Subindex 05 hex: Positive Torque Limit Value 2

- Sets the positive torque limit value 2.

Subindex 06 hex: Negative Torque Limit Value 2

- Sets the negative torque limit value 2.

Subindex 81 hex: Status

- Gives the torque limit status.

● Description of Set Values

Set value		Description
Bit 0		Positive Torque Limit Applied
	0	Torque limit not applied
	1	Torque limit applied
Bit 1		Negative Torque Limit Applied
	0	Torque limit not applied
	1	Torque limit applied

9-6 Homing Objects

These objects are used for the homing setting.

Index (hex)	Sub-index (hex)	Object name	Setting range	Unit	Default setting	Data attri-bute	Size	Access	PDO map	Complete access	Modes of oper-ation
3A00	---	Homing	---	---	---	---	---	---	---	Possible	---
	00	Number of entries	---	---	89 hex	---	1 byte (U8)	RO	---	---	---
	01	Zero Posi-tion Range	0 to 2,147,483,647	Command unit	1,000	A	4 bytes (INT32)	RW	---	---	csp, csv, cst, pp, pv, hm
	02	Homing Method	0 to 37	---	0	E	1 byte (INT8)	RW	---	---	hm
	03	Speed During Search for Switch	1 to 2,147,483,647	Command unit/s	625	A	4 bytes (U32)	RW	---	---	hm
	04	Speed During Search for Zero	1 to 2,147,483,647	Command unit/s	625	A	4 bytes (U32)	RW	---	---	hm
	05	Homing Acceleration	1 to 2,147,483,647	Command unit/s^2	125,000	A	4 bytes (U32)	RW	---	---	hm
	06	Home Offset	-2,147,483,648 to 2,147,483,647	Command unit	0	R	4 bytes (INT32)	RW	---	---	csp, csv, cst, pp, pv, hm
	81	Homing Sta-tus	---	---	---	---	4 bytes (INT32)	RO	---	---	hm
	82	Homing Method Mon-itor	---	---	---	---	4 bytes (INT32)	RO	---	---	hm
	83	1st Sup-ported Hom-ing Method	---	---	8	---	2 bytes (INT16)	RO	---	---	hm
	84	2nd Sup-ported Hom-ing Method	---	---	12	---	2 bytes (INT16)	RO	---	---	hm
	85	3rd Sup-ported Hom-ing Method	---	---	19	---	2 bytes (INT16)	RO	---	---	hm
	86	4th Sup-ported Hom-ing Method	---	---	20	---	2 bytes (INT16)	RO	---	---	hm
	87	5th Sup-ported Hom-ing Method	---	---	33	---	2 bytes (INT16)	RO	---	---	hm
	88	6th Sup-ported Hom-ing Method	---	---	34	---	2 bytes (INT16)	RO	---	---	hm
	89	7th Sup-ported Hom-ing Method	---	---	37	---	2 bytes (INT16)	RO	---	---	hm

Subindex 01 hex: Zero Position Range

- Sets the range (absolute value) to be recognized as the home position.
- Any position within the specified range is recognized as the home position.

Subindex 02 hex: Homing Method

- Selects the homing method in the Homing mode (hm).
- Mirror object of 6098 hex

Description of Set Values

Set value	Description
0	Not specified
8	Homing by Home Proximity Input and home signal (positive operation start)
12	Homing by Home Proximity Input and home signal (negative operation start)
19	Homing without home signal (positive operation start)
20	Homing without home signal (negative operation start)
33	Homing with home signal (negative operation start)
34	Homing with home signal (positive operation start)
37	Present home preset

Subindex 03 hex: Speed During Search for Switch

- Sets the operation speed to be used until the Home Proximity Input signal is detected.
- Mirror object of 6099-01 hex

Subindex 04 hex: Speed During Search for Zero

- Sets the operation speed to be used until the home signal is detected.
- Mirror object of 6099-02 hex

Subindex 05 hex: Homing Acceleration

- Sets the acceleration and deceleration speed to be used during homing.
- Mirror object of 609A hex

Subindex 06 hex: Home Offset

- Sets the offset value from the home of the absolute encoder to the zero position of the Position actual value.
- Mirror object of 607C hex

Subindex 81 hex: Homing Status

- Gives the homing status.

● Description of Set Values

Set value		Description
Bit 0		During Homing
	0	Interrupted or not started
	1	During Homing
Bit 1		Homing Completion
	0	Not completed
	1	Completed
Bit 2		Target Position Reached
	0	Not reached
	1	Reached
Bit 3		Homing Error
	0	No error
	1	Occurred

Subindex 82 hex: Homing Method Monitor

- Gives the status of the present homing method.

● Description of Set Values

Set value	Description
0	Not specified
8	Homing by Home Proximity Input and home signal (positive operation start)
12	Homing by Home Proximity Input and home signal (negative operation start)
19	Homing without home signal (positive operation start)
20	Homing without home signal (negative operation start)
33	Homing with home signal (negative operation start)
34	Homing with home signal (positive operation start)
37	Present home preset

Subindex 83 hex: 1st Supported Homing Method

- Gives the number of the supported homing method.
- Mirror object of 60E3-01 hex

Subindex 84 hex: 2nd Supported Homing Method

- Gives the number of the supported homing method.
- Mirror object of 60E3-02 hex

Subindex 85 hex: 3rd Supported Homing Method

- Gives the number of the supported homing method.
- Mirror object of 60E3-03 hex

Subindex 86 hex: 4th Supported Homing Method

- Gives the number of the supported homing method.
- Mirror object of 60E3-04 hex

Subindex 87 hex: 5th Supported Homing Method

- Gives the number of the supported homing method.
- Mirror object of 60E3-05 hex

Subindex 88 hex: 6th Supported Homing Method

- Gives the number of the supported homing method.
- Mirror object of 60E3-06 hex

Subindex 89 hex: 7th Supported Homing Method

- Gives the number of the supported homing method.
- Mirror object of 60E3-07 hex

9-7 Applied Function Objects

This section explains the objects related to the applied functions.

9-7-1 3B10 hex: Drive Prohibition

Sets the drive prohibition function. Refer to *7-3 Drive Prohibition Functions* on page 7-15 for details.

Index (hex)	Sub-index (hex)	Object name	Setting range	Unit	Default setting	Data attri-bute	Size	Access	PDO map	Complete access	Modes of operation
3B10	---	Drive Prohibition	---	---	---	---	---	---	---	Possible	---
	00	Number of entries	---	---	02 hex	---	1 byte (U8)	RO	---	---	---
	01	Enable	0 to 1	---	0	E	4 bytes (INT32)	RW	---	---	---
	02	Stop Selection	2 or 4	---	2	E	4 bytes (INT32)	RW	---	---	---

Subindex 01 hex: Enable

- Selects whether to enable or disable the drive prohibition function.

● Description of Set Values

Set value	Description
0	Drive prohibition disabled
1	Drive prohibition enabled

Subindex 02 hex: Stop Selection

- Selects the operation when Positive Drive Prohibition or Negative Drive Prohibition is enabled.
- Stop means the state in which the motor speed is 30 r/min or lower.

● Description of Set Values

Set value	Description
2	Deceleration method: Deceleration stop (The deceleration stop torque is used.) State after stopping: Lock at the stop position PDS state: Operation enabled Following error state: Clear at the start of deceleration and at the stop. Hold after stopping.
4*1	Deceleration method: Stop according to the setting of Fault reaction option code State after stopping: Stop according to the setting of Fault reaction option code PDS state: Fault Following error state: Stop according to the setting of Fault reaction option code

*1. A Drive Prohibition Detected (Error No. 38.01) is generated.

9-7-2 3B11 hex: Software Position Limit

Sets the software position limit function.

Index (hex)	Sub-index (hex)	Object name	Setting range	Unit	Default setting	Data attri-bute	Size	Access	PDO map	Complete access	Modes of opera-tion
3B11	---	Software Posi-tion Limit	---	---	---	---	---	---	---	Possible	---
	00	Number of entries	---	---	81 hex	---	1 byte (U8)	RO	---	---	---
	01	Enable Selection	0 to 3	---	0	E	4 bytes (INT32)	RW	---	---	---
	02	Stop Selection	2 or 4	---	2	E	4 bytes (INT32)	RW	---	---	---
	03	Min Position Limit	-2,147,483,648 to 2,147,483,647	Com-mand unit	-62,500	E	4 bytes (INT32)	RW	---	---	csp, csv, cst, pp, pv, hm
	04	Max Position Limit	-2,147,483,648 to 2,147,483,647	Com-mand unit	62,500	E	4 bytes (INT32)	RW	---	---	csp, csv, cst, pp, pv, hm
	81	Status	---	---	---	---	4 bytes (INT32)	RO	---	---	---

Subindex 01 hex: Enable Selection

- Selects whether to enable or disable the software position limit function.
- You can select whether to enable or disable the software position limit function in the positive and negative direction respectively.

● Description of Set Values

Set value	Description
0	Positive: Disabled, Negative: Disabled
1	Positive: Disabled, Negative: Enabled
2	Positive: Enabled, Negative: Disabled
3	Positive: Enabled, Negative: Enabled

Subindex 02 hex: Stop Selection

- Selects the operation when the software position limit is enabled.

● Description of Set Values

Set value	Description
2	Deceleration method: Deceleration stop (The deceleration stop torque is used.) State after stopping: Lock at the stop position PDS state: Operation enabled Following error state: Clear at the start of deceleration and at the stop. Hold after stopping.
4*1	Deceleration method: Stop according to the setting of Fault reaction option code State after stopping: Stop according to the setting of Fault reaction option code PDS state: Fault Following error state: Stop according to the setting of Fault reaction option code

*1. A Software Limit Exceeded (Error No. 34.00) is generated.

Subindex 03 hex: Min Position Limit

- Sets the negative limit value for the Position actual value (6064 hex).
- Mirror object of 607D-01 hex

Subindex 04 hex: Max Position Limit

- Sets the positive limit value for the Position actual value (6064 hex).
- Mirror object of 607D-02 hex

Subindex 81 hex: Status

- Gives the status of the software position limit function and the position.

● Description of Set Values

Set value		Description
Bit 0		Software Position Limit in the positive direction
	0	Disabled
	1	Enabled
Bit 1		Software Position Limit in the negative direction
	0	Disabled
	1	Enabled
Bit 2		Positive Software Limit (PSOT)
	0	Within limit value
	1	Outside limit value
Bit 3		Negative Software Limit (NSOT)
	0	Within limit value
	1	Outside limit value

9-7-3 3B20 hex: Stop Selection

Sets the operation during stop.

Index (hex)	Sub-index (hex)	Object name	Setting range	Unit	Default setting	Data attri-bute	Size	Access	PDO map	Complete access	Modes of operation
3B20	---	Stop Selection	---	---	---	---	---	---	---	Possible	---
	00	Number of entries	---	---	04 hex	---	1 byte (U8)	RO	---	---	---
	01	Shutdown Option Code	-7 to 0	---	-5	C	2 bytes (INT16)	RW	---	---	---
	02	Disable Opera-tion Option Code	-6 to 0	---	-4	C	2 bytes (INT16)	RW	---	---	---
	03	Halt Option Code	1 to 3	---	1	C	2 bytes (INT16)	RW	---	---	pp, pv, hm
	04	Fault Reaction Option Code	-7 to 0	---	-4	C	2 bytes (INT16)	RW	---	---	---

Subindex 01 hex: Shutdown Option Code

- Selects the operation for the time when the PDS state machine is Shutdown.
- When the running motor decelerates and its speed reaches 30 r/min or lower, the operation changes from the deceleration operation to the operation after stopping.
- Mirror object of 605B hex

● Description of Set Values

Set value	Deceleration operation		Operation after stopping
-7	Operation A*1	Deceleration stop (The decelera-tion stop torque is used.)	Free
	Operation B*1	Free-run	
-6	Operation A*1	Deceleration stop (The decelera-tion stop torque is used.)	Free
	Operation B*1	Dynamic brake operation	
-5	Operation A*1	Deceleration stop (The decelera-tion stop torque is used.)	Dynamic brake operation
	Operation B*1	Free-run	
-4	Operation A*1	Deceleration stop (The decelera-tion stop torque is used.)	Dynamic brake operation
	Operation B*1	Dynamic brake operation	
-3	Dynamic brake operation		Free
-2	Free-run		Dynamic brake operation
-1	Dynamic brake operation		Dynamic brake operation
0	Free-run		Free

*1. The Servomotor stops according to the setting of Operation B when in an STO status that is not compatible with deceleration stop or when the P-N Voltage drops to the specified value or lower. In other cases, the Servomotor decelerates to stop according to the setting of Operation A.

Subindex 02 hex: Disable Operation Option Code

- Selects the operation for the time when the PDS state machine is Disable operation.
- When the running motor decelerates and its speed reaches 30 r/min or lower, the operation changes from the deceleration operation to the operation after stopping.
- Mirror object of 605C hex

● Description of Set Values

Set value	Deceleration operation	Operation after stopping
-6	Deceleration stop (The deceleration stop torque is used.)	Free
-4		Dynamic brake operation
-3	Dynamic brake operation	Free
-2	Free-run	Dynamic brake operation
-1	Dynamic brake operation	Dynamic brake operation
0	Free-run	Free

Subindex 03 hex: Halt Option Code

- Selects the stop method when bit 8 (Halt) in Controlword is set to *1*, under the condition that the Modes of operation is set to the Profile position mode (pp), Profile velocity mode (pv), or Homing mode (hm).
- When the running motor decelerates and its speed reaches 30 r/min or lower, the operation changes from the deceleration operation to the operation after stopping.
- The following error is cleared for all set values after the Servomotor stops.
- Mirror object of 605D hex

● Description of Set Values

Set value	Deceleration operation	Operation after stopping the deceleration operation
1	Deceleration stop at a speed which is used in the selected operation mode pp, pv: Profile deceleration hm: Homing acceleration	pp, hm: Internal position command is zero pv: Internal velocity command is zero
2	Not supported	---
3	Deceleration stop (The deceleration stop torque is used.)	pp, hm: Internal position command is zero pv: Internal velocity command is zero

Subindex 04 hex: Fault Reaction Option Code

- Selects the operation for the time when an error occurred in the Servo Drive (PDS state = Fault reaction active).
- When the running motor decelerates and its speed reaches 30 r/min or lower, the operation changes from the deceleration operation to the operation after stopping.
- Mirror object of 605E hex

Description of Set Values

Set value	Deceleration operation		Operation after stopping
-7	Operation A*1	Deceleration stop (The deceleration stop torque is used.)	Free
	Operation B*1	Free-run	
-6	Operation A*1	Deceleration stop (The deceleration stop torque is used.)	Free
	Operation B*1	Dynamic brake operation	
-5	Operation A*1	Deceleration stop (The deceleration stop torque is used.)	Dynamic brake operation
	Operation B*1	Free-run	
-4	Operation A*1	Deceleration stop (The deceleration stop torque is used.)	Dynamic brake operation
	Operation B*1	Dynamic brake operation	
-3	Dynamic brake operation		Free
-2	Free-run		Dynamic brake operation
-1	Dynamic brake operation		Dynamic brake operation
0	Free-run		Free

*1. Operation A and B indicate whether or not to perform the deceleration stop when an error occurs. If an error that is compatible with deceleration stop occurs, the deceleration stop is performed according to the setting of Operation A. If an error that is not compatible with deceleration stop occurs, the dynamic brake operation or free-run is performed according to the setting of Operation B. For details on errors, refer to *12-3 Errors* on page 12-10.

9-7-4 3B21 hex: Deceleration Stop

Sets the operation during deceleration stop.

Index (hex)	Sub-index (hex)	Object name	Setting range	Unit	Default setting	Data attri-bute	Size	Access	PDO map	Complete access	Modes of opera-tion
3B21	---	Deceleration Stop	---	---	---	---	---	---	---	Possible	---
	00	Number of entries	---	---	01 hex	---	1 byte (U8)	RO	---	---	---
	01	Torque	1 to 5,000	0.1%	5,000	E	4 bytes (INT32)	RW	---	---	---

Subindex 01 hex: Torque

- Sets the torque for deceleration stop.
- Sets the value in units of 0.1% of the rated voltage (100%).
- The set value is used for the following deceleration stop methods.

a) When the drive prohibition is enabled and deceleration is performed with **Drive Prohibition - Stop Selection** (3B10-02 hex) set to *2*
b) When deceleration is performed with **Disable Operation Option Code** (3B20-02 hex) set to *-6* or *-4*
c) When deceleration is performed with **Shutdown Option Code** (3B20-01 hex) set to *-7* to *-4*
d) When deceleration is performed with **Halt Option Code** (3B20-03 hex) set to *3*
e) When deceleration is performed with **Fault Reaction Option Code** (3B20-04 hex) set to *-7* to *-4*
f) When deceleration is performed with **Software Position Limit - Stop Selection** (3B11-02 hex) set to *2*

9-7-5 3B30 hex: Touch Probe 1

Sets the Latch Function 1 (Touch Probe 1). Refer to *7-11 Touch Probe Function (Latch Function)* on page 7-38 for details.

Index (hex)	Sub-index (hex)	Object name	Setting range	Unit	Default setting	Data attri-bute	Size	Access	PDO map	Complete access	Modes of opera-tion
3B30	---	Touch Probe 1	---	---	---	---	---	---	---	Possible	---
	00	Number of entries	---	---	F1 hex	---	1 byte (U8)	RO	---	---	---
	01	Touch Probe 1 Source	1 to 6	---	1	A	2 bytes (INT16)	RW	---	---	---
	81	Status	---	---	---	---	4 bytes (INT32)	RO	---	---	---
	83	Positive Edge Time Stamp	---	ns	---	---	8 bytes (U64)	RO	TxPDO	---	---
	84	Touch Probe 1 Positive Edge	---	Com-mand unit	---	---	4 bytes (INT32)	RO	---	---	---
	F1	Setting	00000000 to FFFFFFFF hex	---	0	A	4 bytes (INT32)	W	---	---	---

Subindex 01 hex: Touch Probe 1 Source

- Selects the trigger to be used for the Latch Function 1.
- Mirror object of 60D0-01 hex

● Description of Set Values

Set value	Description
1	External Latch Input 1 (EXT1)
2	External Latch Input 2 (EXT2)
6	Encoder Phase Z

Subindex 81 hex: Status

- Gives the status of the Latch Function 1.

● Description of Set Values

Set value		Description
Bit 0		Enable or disable Latch Function 1
	0	Disabled
	1	Enabled
Bit 1		With or without Latch 1 positive data
	0	Without latch data
	1	With latch data

Subindex 83 hex: Positive Edge Time Stamp

- Gives the time which is latched by the Latch Function 1 (Touch Probe 1).

Subindex 84 hex: Touch Probe 1 Positive Edge

- Gives the position which is latched on the positive edge by the Latch Function 1 (Touch Probe 1).
- Mirror object of 60BA hex

Subindex F1 hex: Setting

- Sets the Latch Function 1.

Description of Set Values

Set value		Description
Bit 0		Enable or disable Latch Function 1
	0	Disabled
	1	Enabled
Bit 1		Latch 1 operation
	0	Latch on the first trigger only.
	1	Latch continuously on every trigger input
Bit 2 and 3		Latch 1 trigger input signal switch
	00	EXT1
	01	Phase Z
	10	Follow the setting in the Touch probe source.
	11	Reserved
Bit 4		Latch 1 trigger operation on the positive edge
	0	Latch is disabled
	1	Latch is enabled

9-7-6 3B31 hex: Touch Probe 2

Sets the Latch Function 2 (Touch Probe 2). Refer to *7-11 Touch Probe Function (Latch Function)* on page 7-38 for details.

Index (hex)	Sub-index (hex)	Object name	Setting range	Unit	Default setting	Data attri-bute	Size	Access	PDO map	Complete access	Modes of opera-tion
3B31	---	Touch Probe 2	---	---	---	---	---	---	---	Possible	---
	00	Number of entries	---	---	F1 hex	---	1 byte (U8)	RO	---	---	---
	01	Touch Probe 2 Source	1 to 6	---	2	A	2 bytes (INT16)	RW	---	---	---
	81	Status	---	---	---	---	4 bytes (INT32)	RO	---	---	---
	83	Positive Edge Time Stamp	---	ns	---	---	8 bytes (U64)	RO	TxPDO	---	---
	84	Touch Probe 2 Positive Edge	---	Com-mand unit	---	---	4 bytes (INT32)	RO	---	---	---
	F1	Setting	00000000 to FFFFFFFF hex	---	0	A	4 bytes (INT32)	W	---	---	---

Subindex 01 hex: Touch Probe 2 Source

- Selects the trigger to be used for the Latch Function 2.
- Mirror object of 60D0-02 hex

● Description of Set Values

Set value	Description
1	External Latch Input 1 (EXT1)
2	External Latch Input 2 (EXT2)
6	Encoder Phase Z

Subindex 81 hex: Status

- Gives the status of the Latch Function 2.

● Description of Set Values

Set value		Description
Bit 8		Enable or disable Latch Function 2
	0	Disabled
	1	Enabled
Bit 9		With or without Latch 2 positive data
	0	Without latch data
	1	With latch data

Subindex 83 hex: Positive Edge Time Stamp

- Gives the time which is latched by the Latch Function 2 (Touch Probe 2).

Subindex 84 hex: Touch Probe 2 Positive Edge

- Gives the position which is latched on the positive edge by the Latch Function 2 (Touch Probe 2).
- Mirror object of 60BC hex

Subindex F1 hex: Setting

- Sets the Latch Function 2.

● Description of Set Values

Set value		Description
Bit 8		Enable or disable Latch Function 2
	0	Disabled
	1	Enabled
Bit 9		Latch 2 operation
	0	Latch on the first trigger only.
	1	Latch continuously on every trigger input
Bit 10 and 11		Latch 2 trigger input signal switch
	00	EXT2
	01	Phase Z
	10	Follow the setting in the Touch probe source.
	11	Reserved
Bit 12		Latch 2 trigger operation on the positive edge
	0	Latch is disabled
	1	Latch is enabled

9-7-7 3B40 hex: Zone Notification 1

Sets the Zone Notification 1.

Index (hex)	Sub-index (hex)	Object name	Setting range	Unit	Default setting	Data attri-bute	Size	Access	PDO map	Complete access	Modes of opera-tion
3B40	---	Zone Notification 1	---	---	---	---	---	---	---	Possible	---
	00	Number of entries	---	---	81 hex	---	1 byte (U8)	RO	---	---	---
	01	Lower Limit	-2,147,483,648 to 2,147,483,647	Com-mand unit	0	A	4 bytes (INT32)	RW	---	---	---
	02	Upper Limit	-2,147,483,648 to 2,147,483,647	Com-mand unit	0	A	4 bytes (INT32)	RW	---	---	---
	81	Status	---	---	---	---	4 bytes (INT32)	RO	---	---	---

Subindex 01 hex: Lower Limit

- Sets the lower limit range of Zone Notification.

Subindex 02 hex: Upper Limit

- Sets the upper limit range of Zone Notification.

Subindex 81 hex: Status

- Gives the status of Zone Notification 1.

● Description of Set Values

Set value		Description
Bit 0		Range of Zone Notification 1
	0	Outside the range
	1	Within the range
Bit 1		Enable or disable the function
	0	Disabled (upper limit less than or equal to lower limit)
	1	Enabled (upper limit greater than lower limit)

9-7-8 3B41 hex: Zone Notification 2

Sets the Zone Notification 2.

Index (hex)	Sub-index (hex)	Object name	Setting range	Unit	Default setting	Data attri-bute	Size	Access	PDO map	Complete access	Modes of oper-ation
3B41	---	Zone Notification 2	---	---	---	---	---	---	---	Possible	---
	00	Number of entries	---	---	81 hex	---	1 byte (U8)	RO	---	---	---
	01	Lower Limit	-2,147,483,648 to 2,147,483,647	Com-mand unit	0	A	4 bytes (INT32)	RW	---	---	---
	02	Upper Limit	-2,147,483,648 to 2,147,483,647	Com-mand unit	0	A	4 bytes (INT32)	RW	---	---	---
	81	Status	---	---	---	---	4 bytes (INT32)	RO	---	---	---

Subindex 01 hex: Lower Limit

- Sets the lower limit range of Zone Notification.

Subindex 02 hex: Upper Limit

- Sets the upper limit range of Zone Notification.

Subindex 81 hex: Status

- Gives the status of Zone Notification 2.

● Description of Set Values

Set value		Description
Bit 0		Range of Zone Notification 2
	0	Outside the range
	1	Within the range
Bit 1		Enable or disable the function
	0	Disabled (upper limit less than or equal to lower limit)
	1	Enabled (upper limit greater than lower limit)

9-7-9 3B50 hex: Position Detection Function

Sets the Position Detection Function.

Index (hex)	Sub-index (hex)	Object name	Setting range	Unit	Default setting	Data attri-bute	Size	Access	PDO map	Complete access	Modes of oper-ation
3B50	---	Position Detec-tion Function	---	---	---	---	---	---	---	Possible	---
	00	Number of entries	---	---	05 hex	---	1 byte (U8)	RO	---	---	---
	05	Following Error Window	0 to 4,294,967,295	Com-mand unit	10,500,000	A	4 bytes (U32)	RW	---	---	csp, pp, hm

Subindex 05 hex: Following Error Window

- Sets the threshold for a following error.
- When the following error is more than or equal to this set value, an Excessive Position Deviation Error (Error No. 24.00) is detected.
- Mirror object of 6065 hex

● Description of Set Values

Set value	Description
0 to 2,147,483,647	Enabled at the value set in the Following error window
2,147,483,648 to 4,294,967,294	Enabled at 2,147,483,647 hex as the value set in the Following error window
4,294,967,295	Excessive position deviation detection disabled

9-7-10 3B51 hex: Positioning Completion Notification

Sets the condition of the Positioning Completion Output (INP1).

Index (hex)	Sub-index (hex)	Object name	Setting range	Unit	Default setting	Data attri-bute	Size	Access	PDO map	Complete access	Modes of oper-ation
3B51	---	Positioning Completion Notification	---	---	---	---	---	---	---	Possible	---
	00	Number of entries	---	---	81 hex	---	1 byte (U8)	RO	---	---	---
	01	Position Win-dow	1 to 2,147,483,647	Com-mand unit	1,000	A	4 bytes (U32)	RW	---	---	csp, pp, hm
	81	Status	---	---	---	---	4 bytes (INT32)	RO	---	---	csp, pp, hm

Subindex 01 hex: Position Window

- When the following error is less than or equal to the set value of this object, the Positioning Comple-tion Output 1 (INP1) turns ON.
- This setting is also used as the threshold for detecting Target reached flag in the EtherCAT communi-cations status.
- Mirror object of 6067 hex

Subindex 81 hex: Status

- Gives the status of Positioning Completion 1.

● Description of Set Values

Set value	Description
0	Not completed
1	Completed

9-7-11 3B52 hex: Positioning Completion Notification 2

Sets the condition of the Positioning Completion Output 2 (INP2).

Index (hex)	Sub-index (hex)	Object name	Setting range	Unit	Default setting	Data attri-bute	Size	Access	PDO map	Complete access	Modes of oper-ation
3B52	---	Positioning Com-pletion Notifica-tion 2	---	---	---	---	---	---	---	Possible	---
	00	Number of entries	---	---	81 hex	---	1 byte (U8)	RO	---	---	---
	01	Position Window	1 to 2,147,483,647	Com-mand unit	1,000	A	4 bytes (INT32)	RW	---	---	csp, pp, hm
	02	Notification Con-dition	0 to 1	---	1	A	4 bytes (INT32)	RW	---	---	csp, pp, hm
	81	Status	---	---	---	---	4 bytes (INT32)	RO	---	---	csp, pp, hm

Subindex 01 hex: Position Window

- Sets the range (following error) to determine that positioning is completed.

Subindex 02 hex: Notification Condition

- Sets the judgment condition to output the Positioning Completion Output 2 (INP2).

● Description of Set Values

Set value	Description
0	When the following error is less than or equal to the value set in the Position Window, Positioning Completion Output is turned ON.
1	When there is no position command and the following error is less than or equal to the Position Win-dow, Positioning Completion Output is turned ON.

Subindex 81 hex: Status

- Gives the status of Positioning Completion 2.

● Description of Set Values

Set value	Description
0	Not completed
1	Completed

9-7-12 3B60 hex: Speed Detection Function

Sets the Speed Detection Function.

Index (hex)	Sub-index (hex)	Object name	Setting range	Unit	Default setting	Data attri-bute	Size	Access	PDO map	Complete access	Modes of opera-tion
3B60	---	Speed Detection Function	---	---	---	---	---	---	---	Possible	---
	00	Number of entries	---	---	81 hex	---	1 byte (U8)	RO	---	---	---
	01	Velocity Attain-ment Detection Level	10 to 20,000	r/min	1,000	A	4 bytes (INT32)	RW	---	---	csp, csv, cst, pp, pv, hm
	02	Zero Speed Detection Level	10 to 20,000	r/min	50	A	4 bytes (INT32)	RW	---	---	csp, csv, cst, pp, pv, hm
	03	Velocity Confor-mity Detection Range	10 to 20,000	r/min	50	A	4 bytes (INT32)	RW	---	---	csp, csv, cst, pp, pv, hm
	04	Excessive Speed Detection Level	-2,147,483,648 to 2,147,483,647	r/min	0	A	4 bytes (INT32)	RW	---	---	csp, csv, cst, pp, pv, hm
	05	Excessive Veloc-ity Deviation Detection Level	0 to 20,000	r/min	0	A	4 bytes (INT32)	RW	---	---	csp, pp, hm
	81	Status	---	---	---	---	4 bytes (INT32)	RO	---	---	csp, csv, cst, pp, pv, hm

Subindex 01 hex: Velocity Attainment Detection Level

- Sets the velocity to be detected by the velocity attainment detection function which detects that the motor velocity reaches any velocity.

Subindex 02 hex: Zero Speed Detection Level

- Sets the rotation speed [r/min] at which the motor speed can be regarded as 0 (stop).

Subindex 03 hex: Velocity Conformity Detection Range

- Sets the range (deviation) in which the motor velocity can be regarded as conformed to the command velocity.

Subindex 04 hex: Excessive Speed Detection Level

- Sets the excessive speed detection level.
  When 0 is set, the excessive speed is detected at 1.2 times as high as the maximum speed of the motor.
- When the excessive speed is detected, an Excessive Speed Error (Error No. 26.00) occurs.

Subindex 05 hex: Excessive Velocity Deviation Detection Level

- Sets the threshold to detect the excessive velocity deviation.
- When the velocity deviation reaches the set value or more, an Excessive Speed Deviation Error (Error No. 24.01) occurs.

● Description of Set Values

Set value	Description
0	Disabled
Others	Threshold for Excessive Velocity Deviation Detection Level

Subindex 81 hex: Status

- Gives the status of each detection function.
- The bit value *1* represents detected, and *0* represents not detected.

● Bit Descriptions

Bit	Description
0	Velocity Attainment Detection
1	Zero Speed Detection
2	Velocity Conformity Detection
3	Excessive Speed Detection
4	Excessive Velocity Deviation Detection

9-7-13 3B70 hex: Vibration Detection

Sets the vibration detection function.

Index (hex)	Sub-index (hex)	Object name	Setting range	Unit	Default setting	Data attri-bute	Size	Access	PDO map	Complete access	Modes of operation
3B70	---	Vibration Detec-tion	---	---	---	---	---	---	---	Possible	---
	00	Number of entries	---	---	01 hex	---	1 byte (U8)	RO	---	---	---
	01	Detection Level	0 to 500	%	500	A	4 bytes (INT32)	RW	---	---	---

Subindex 01 hex: Detection Level

- Sets the vibration detection level.
- If torque vibration more than or equal to this set value is detected, the Motor Vibration Warning (Error No. A6.00) is output.

9-7-14 3B71 hex: Runaway Detection

Sets the runaway detection function.

Index (hex)	Sub-index (hex)	Object name	Setting range	Unit	Default setting	Data attri-bute	Size	Access	PDO map	Complete access	Modes of opera-tion
3B71	---	Runaway Detec-tion	---	---	---	---	---	---	---	Possible	---
	00	Number of entries	---	---	01 hex	---	1 byte (U8)	RO	---	---	---
	01	Enable	0 to 1	---	1	R	4 bytes (INT32)	RW	---	---	---

Subindex 01 hex: Enable

- Selects whether to enable or disable the runaway detection function.

● Description of Set Values

Set value	Description
0	Disabled
1	Enabled

- The default value is *1* (enabled).
- When the runaway detection function detects that the Servomotor rotates in the opposite direction due to incorrect wiring of the motor cable, etc., a Runaway Detected (Error No. 20.00) occurs.
- When the command torque and the motor speed exceed a certain value after Servo ON, this function detects whether it is normal operation or an error. When the acceleration direction of the Servomotor does not conform to the direction of the command torque for a certain period of time, this function determines that the Servomotor rotates in the opposite direction, a Runaway Detected occurs.

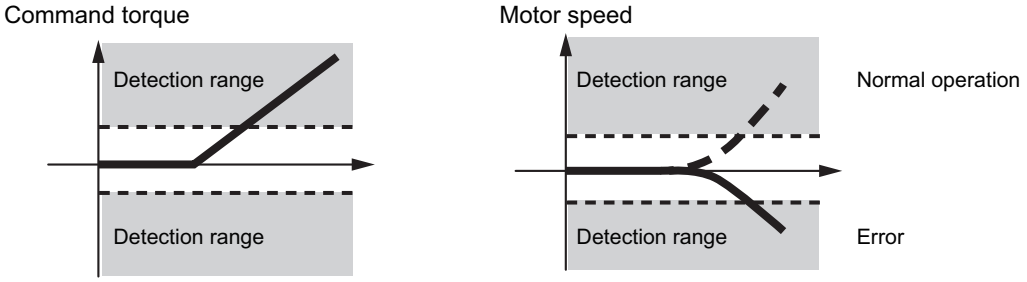

Precautions for Correct Use

- If the gain is lower than the default setting, the runaway detection function may not work.
- If **1st Torque Command Filter - Cutoff Frequency** (3233-02 hex) or **2nd Torque Command Filter - Cutoff Frequency** (3234-02 hex) is set to 10 [Hz] or lower, this function may not work.
- When the Servomotor has a near-no load such that the inertia ratio is 50% or lower, if **1st Velocity Control Gain - Proportional Gain** (3323-01 hex) or **2nd Velocity Control Gain - Proportional Gain** (3324-01 hex) is set to a value higher than 400 [Hz], this function may not work.
- If the Servomotor rotates in the opposite direction by an external force over the momentary maximum torque of the Servomotor.

9-7-15 3B80 hex: Load Characteristic Estimation

Sets the operation of the load characteristic estimation. Refer to *11-8 Load Characteristic Estimation* on page 11-18 for details.

Index (hex)	Sub-index (hex)	Object name	Setting range	Unit	Default setting	Data attri-bute	Size	Access	PDO map	Complete access	Modes of opera-tion
3B80	---	Load Character-istic Estimation	---	---	---	---	---	---	---	Possible	---
	00	Number of entries	---	---	FF hex	---	1 byte (U8)	RO	---	---	---
	01	Inertia Ratio Update Selection	0 to 1	---	1	A	4 bytes (INT32)	RW	---	---	csp, csv, cst, pp, pv, hm
	02	Viscous Friction Compensation Update Selection	0 to 1	---	0	A	4 bytes (INT32)	RW	---	---	csp, csv, cst, pp, pv, hm
	03	Unbalanced Load Compensa-tion Update Selection	0 to 1	---	0	A	4 bytes (INT32)	RW	---	---	csp, csv, cst, pp, pv, hm
	04	Dynamic Friction Compensation Update Selection	0 to 1	---	0	A	4 bytes (INT32)	RW	---	---	csp, csv, cst, pp, pv, hm
	05	Viscous Friction Tuning Coeffi-cient	0 to 200	%	100	A	4 bytes (INT32)	RW	---	---	csp, csv, cst, pp, pv, hm
	06	Estimation Sensi-tivity Selection	0 to 2	---	1	A	4 bytes (INT32)	RW	---	---	csp, csv, cst, pp, pv, hm
	FF	Estimation Status	---	---	---	---	4 bytes (INT32)	RO	---	---	---

Subindex 01 hex: Inertia Ratio Update Selection

- Selects whether to estimate load characteristics and update a value of the inertia ratio.

● Description of Set Values

Set value	Description
0	Use the present set value.
1	Update with the estimation result.

Subindex 02 hex: Viscous Friction Compensation Update Selection

- Selects whether to estimate load characteristics and update a value of the viscous friction coefficient.

Set value	Description
0	Use the present set value.
1	Update with the estimation result.

Subindex 03 hex: Unbalanced Load Compensation Update Selection

- Selects whether to estimate load characteristics and update a value of the unbalanced load compensation.

● Description of Set Values

Set value	Description
0	Use the present set value.
1	Update with the estimation result.

Subindex 04 hex: Dynamic Friction Compensation Update Selection

- Selects whether to estimate load characteristics and update a value of the dynamic friction compensation.

● Description of Set Values

Set value	Description
0	Use the present set value.
1	Update with the estimation result.

Subindex 05 hex: Viscous Friction Tuning Coefficient

- Sets the value to adjust the amount of torque compensation which is calculated from the estimated viscous friction value. When the viscous friction coefficient update is enabled, the viscous friction coefficient is updated with a value which is calculated by multiplying the estimated viscous friction by this tuning coefficient.
- Viscous friction coefficient used in torque compensation = Estimated viscous friction coefficient × Tuning coefficient ÷ 100

Subindex 06 hex: Estimation Sensitivity Selection

- Selects the sensitivity to estimate load characteristics from load changes during the load characteristic estimation.
- The higher the set value is, the earlier the load characteristic change is followed, but the estimated variation against the disturbance becomes greater.

● Description of Set Values

Set value	Description
0	Estimate by minutes from load characteristic changes. This setting is used when there is a little change in load characteristics.
1	Estimate by seconds from load characteristic changes. This setting is used when there is a gradual change in load characteristics.
2	Estimate immediately from load characteristic changes. This setting is used when there is a sharp change in load characteristics.

Subindex FF hex: Estimation Status

- Gives the execution status of the load characteristic estimation.

Description of Set Values

Set value	Description
0	Never Executed
1	Obtaining data
2	During estimation
3	Estimation completed

9-8 Error- and Warning-related Objects

These objects are used for the error and warning setting.

9-8-1 4000 hex: Error Full Code

Gives the error code.

Index (hex)	Sub-index (hex)	Object name	Setting range	Unit	Default setting	Data attri-bute	Size	Access	PDO map	Complete access	Modes of opera-tion
4000	---	Error Full Code	---	---	---	---	---	---	---	Possible	---
	00	Number of entries	---	---	82 hex	---	1 byte (U8)	RO	---	---	---
	81	Error Full Code	---	---	---	---	4 bytes (INT32)	RO	TxPDO	---	---
	82	Error Code	---	---	---	---	2 bytes (U16)	RO	---	---	---

Subindex 81 hex: Error Full Code

- Gives the error number of an error or warning which occurs in the Servo Drive.
- For example, in the case of Overload Warning (Error No. A0.00), a value of 0x0000A000 hex is given.

Subindex 82 hex: Error Code

- Gives the code of the latest existing error or warning which exists in the Servo Drive.
  When more than one error or warning occurs at the same time, the highest-priority one is given.
- The given error is from the manufacturer specific area FF00 to FFFF hex.
- The lower word of FF00 to FFFF hex gives the main code of the error.
- Mirror object of 603F hex

9-8-2 4020 hex: Warning Customization

Sets the warning detection function.

Index (hex)	Sub-index (hex)	Object name	Setting range	Unit	Default setting	Data attri-bute	Size	Access	PDO map	Complete access	Modes of oper-ation
4020	---	Warning Custom-ization	---	---	---	---	---	---	---	Possible	---
	00	Number of entries	---	---	07 hex	---	1 byte (U8)	RO	---	---	---
	01	Warning Mask 1 Selection	---	---	0000 hex	R	4 bytes (INT32)	RW	---	---	---
	03	Warning Mask 3 Selection	---	---	0000 hex	R	4 bytes (INT32)	RW	---	---	---
	04	Warning Hold Selection	0000 to 0007 hex	---	0000 hex	R	4 bytes (INT32)	RW	---	---	---
	05	Warning Level Change 1 Selec-tion	---	---	0000 hex	R	4 bytes (INT32)	RW	---	---	---
	07	Warning Level Change 3 Selec-tion	---	---	0000 hex	R	4 bytes (INT32)	RW	---	---	---

Subindex 01 hex: Warning Mask 1 Selection

- Sets the mask for the warning of Servo Drive.
- When a bit is set to *1*, the detection of the corresponding warning is disabled.

● Description of Set Values

Bit	Description
0	Overload Warning
1	Regeneration Overload Warning
3	Motor Vibration Warning
4	Capacitor Lifetime Warning
5	Inrush Current Prevention Relay Lifetime Warning
9	Lifetime Information Corruption Warning
10	Encoder Lifetime Warning
11	Fan Rotation Warning
12	Absolute Encoder Counter Overflow Warning
13	Safety Relay Lifetime Warning

Subindex 03 hex: Warning Mask 3 Selection

- Sets the mask for the warning.
- When a bit is set to *1*, the detection of the corresponding warning is disabled.

● Description of Set Values

Bit	Description
0	Data Setting Warning
1	Command Warning
2	EtherCAT Communications Warning

Subindex 04 hex: Warning Hold Selection

- Selects whether to hold or not the warning state.

● Description of Set Values

Set value		Description
Bit 0		Warning mask 1 hold selection
	0	Not hold the warning enabled in Warning Mask 1 Selection. The warning is automatically cleared when the cause of the warning is eliminated. However, the warning is held for at least 1 second.
	1	Hold the warning enabled in Warning Mask 1 Selection. After the cause of the warning is eliminated, the error reset command must be sent.
Bit 2		Warning mask 3 hold selection
	0	Not hold the warning enabled in Warning Mask 3 Selection. The warning is automatically cleared when the cause of the warning is eliminated. However, the warning is held for at least 1 second.
	1	Hold the warning enabled in Warning Mask 3 Selection. After the cause of the warning is eliminated, the error reset command must be sent.

Subindex 05 hex: Warning Level Change 1 Selection

- Changes the warning level.
- When a bit is set to *1*, the level of the corresponding warning is set as the error.

● Description of Set Values

Bit	Description
0	Overload Warning
1	Regeneration Overload Warning
3	Motor Vibration Warning
4	Capacitor Lifetime Warning
5	Inrush Current Prevention Relay Lifetime Warning
9	Lifetime Information Corruption Warning
10	Encoder Lifetime Warning
11	Fan Rotation Warning
12	Absolute Encoder Counter Overflow Warning
13	Safety Relay Lifetime Warning

Subindex 07 hex: Warning Level Change 3 Selection

- Changes the warning level.
- When a bit is set to *1*, the level of the corresponding warning is set as the error.

● Description of Set Values

Bit	Description
0	Data Setting Warning
1	Command Warning
2	EtherCAT Communications Warning

9-8-3 4021 hex: Warning Output 1 Setting

Sets the warning to be output by Warning Output 1 (WARN1).

Index (hex)	Sub-index (hex)	Object name	Setting range	Unit	Default setting	Data attri-bute	Size	Access	PDO map	Complete access	Modes of opera-tion
4021	---	Warning Output 1 Setting	---	---	---	---	---	---	---	Possible	---
	00	Number of entries	---	---	03 hex	---	1 byte (U8)	RO	---	---	---
	01	Selection 1	---	---	0	A	4 bytes (INT32)	RW	---	---	---
	03	Selection 3	---	---	0	A	4 bytes (INT32)	RW	---	---	---

Subindex 01 hex: Selection 1

- Selects the warning type to be output by Warning Output 1 (WARN1).
- When a bit is set to *1*, the output turns ON at the occurrence of the corresponding warning.

● Description of Set Values

Bit	Description
0	Overload Warning
1	Regeneration Overload Warning
3	Motor Vibration Warning
4	Capacitor Lifetime Warning
5	Inrush Current Prevention Relay Lifetime Warning
9	Lifetime Information Corruption Warning
10	Encoder Lifetime Warning
11	Fan Rotation Warning
12	Absolute Encoder Counter Overflow Warning
13	Safety Relay Lifetime Warning

Subindex 03 hex: Selection 3

- Selects the warning type to be output by Warning Output 1 (WARN1).

● Description of Set Values

Bit	Description
0	Data Setting Warning
1	Command Warning
2	EtherCAT Communications Warning

9-8-4 4022 hex: Warning Output 2 Setting

Sets the warning to be output by Warning Output 2 (WARN2).

Index (hex)	Sub-index (hex)	Object name	Setting range	Unit	Default setting	Data attri-bute	Size	Access	PDO map	Complete access	Modes of oper-ation
4022	---	Warning Output 2 Setting	---	---	---	---	---	---	---	Possible	---
	00	Number of entries	---	---	03 hex	---	1 byte (U8)	RO	---	---	---
	01	Selection 1	---	---	0	A	4 bytes (INT32)	RW	---	---	---
	03	Selection 3	---	---	0	A	4 bytes (INT32)	RW	---	---	---

Subindex 01 hex: Selection 1

- Selects the warning type to be output by Warning Output 2 (WARN2).
- When a bit is set to *1*, the output turns ON at the occurrence of the corresponding warning.

● Description of Set Values

Bit	Description
0	Overload Warning
1	Regeneration Overload Warning
3	Motor Vibration Warning
4	Capacitor Lifetime Warning
5	Inrush Current Prevention Relay Lifetime Warning
9	Lifetime Information Corruption Warning
10	Encoder Lifetime Warning
11	Fan Rotation Warning
12	Absolute Encoder Counter Overflow Warning
13	Safety Relay Lifetime Warning

Subindex 03 hex: Selection 3

- Selects the warning type to be output by Warning Output 2 (WARN2).
- When a bit is set to *1*, the output turns ON at the occurrence of the corresponding warning.

● Description of Set Values

Bit	Description
0	Data Setting Warning
1	Command Warning
2	EtherCAT Communications Warning

9-8-5 4030 hex: Information Customization

Sets the function for information detection.

Index (hex)	Sub-index (hex)	Object name	Setting range	Unit	Default setting	Data attri-bute	Size	Access	PDO map	Complete access	Modes of oper-ation
4030	---	Information Cus-tomization	---	---	---	---	---	---	---	Possible	---
	00	Number of entries	---	---	01 hex	---	1 byte (U8)	RO	---	---	---
	01	Information Level Change Selec-tion	0 to FFFF FFFF hex	---	0 hex	R	4 bytes (INT32)	RW	---	---	---

Subindex 01 hex: Information Level Change Selection

- Sets the level change of information.
- When a bit is set to *1*, the level of the corresponding information is set as the error.

● Description of Set Values

Bit	Description
0	STO Detected

9-9 Monitoring-related Objects

These objects are used for the monitoring setting.

9-9-1 4110 hex: Monitor Data via PDO

Sets the object for monitoring. You can monitor any object by mapping the monitor data to a TxPDO.

Index (hex)	Sub-index (hex)	Object name	Setting range	Unit	Default setting	Data attri-bute	Size	Access	PDO map	Complete access	Modes of opera-tion
4110	---	Monitor Data via PDO	---	---	---	---	---	---	---	Possible	---
	00	Number of entries	---	---	84 hex	---	1 byte (U8)	RO	---	---	---
	01 to 04	Target Object 1 to 4	0000 0000 to FFFF FFFF hex	---	0000 0000 hex	A	4 bytes (U32)	RW	---	---	---
	81 to 84	Monitor Data 1 to 4	---	---	---	---	4 bytes (INT32)	RO	TxPDO	---	---

Subindex 01 to 04 hex: Target Object 1 to 4

- Sets the object for monitoring.
- Set the index in upper two bytes and the subindex in lower two bytes.

● Description of Set Values

Set value	Description
Upper 2 bytes	Index of the target object
Lower 2 bytes	Subindex of the target object

Subindex 81 to 84 hex: Monitor Data 1 to 4

- Gives the object value set in Target Object.
- The given value is always four bytes. If the size of the set object is less than four bytes, the data size will be extended to four bytes by the sign extension. If the size of the set object is four bytes or more, lower four bytes of the object will be given.

Precautions for Correct Use

Objects whose data type is BOOL, U, or INT can be set in Target Object. Do not set objects whose data type is VS or OS.

9-9-2 4120 hex: EtherCAT Communications Error Count

Counts the number of EtherCAT communication errors and clears the error count value.

Index (hex)	Sub-index (hex)	Object name	Setting range	Unit	Default setting	Data attri-bute	Size	Access	PDO map	Complete access	Modes of operation
4120	---	EtherCAT Com-munications Error Count	---	---	---	---	---	---	---	Possible	---
	00	Number of entries	---	---	F1 hex	---	1 byte (U8)	RO	---	---	---
	81	Error Count	---	---	---	---	4 bytes (U32)	RO	---	---	---
	F1	Error Count Clear	0 to 1	---	0	A	4 bytes (INT32)	W	---	---	---

Subindex 81 hex: Error Count

- Counts the number of EtherCAT communication errors. This object does not count from 7FFF FFFF hex.

Subindex F1 hex: Error Count Clear

- Clears the error count value by the writing of 1.

9-9-3 4130 hex: Safety Status Monitor

Monitors the safety function.

Index (hex)	Sub-index (hex)	Object name	Setting range	Unit	Default setting	Data attri-bute	Size	Access	PDO map	Complete access	Modes of operation
4130	---	Safety Status Monitor	---	---	---	---	---	---	---	Possible	---
	00	Number of entries	---	---	B1 hex	---	1 byte (U8)	RO	---	---	---
	81	Safety Status	---	---	---	---	4 bytes (U32)	RO	Tx PDO	---	---
	82	Mirror Safety con-trolword	---	---	---	---	2 bytes (U16)	RO	Tx PDO	---	---
	83	Mirror Safety sta-tusword	---	---	---	---	2 bytes (U16)	RO	Tx PDO	---	---
	91	Safety Control-word 1st Byte	---	---	---	---	1 byte (U8)	RO	---	---	---
	92	Safety Control-word 2nd Byte	---	---	---	---	1 byte (U8)	RO	---	---	---
	A1	Safety Statusword 1st Byte	---	---	---	---	1 byte (U8)	RO	---	---	---
	A2	Safety Statusword 2nd Byte	---	---	---	---	1 byte (U8)	RO	---	---	---
	B1	FSoE Address	---	---	---	---	2 bytes (U16)	RO	---	---	---

Subindex 81 hex: Safety Status

- Gives the status of the safety function.

Description of Set Values

Set value		Description
Bit 0		STO status
	0	STO is not active
	1	STO is active
Bit 1		STO status (STO via Hardwire is detected or not)
	0	STO via Hardwire is not active
	1	STO via Hardwire is active
Bit 2		STO status (STO via FSoE is detected or not)
	0	STO via FSoE is not active
	1	STO via FSoE is active
Bit 3		STO status (STO is active or not under a condition of Motion Safety Monitoring Error or Safety Function Error.)
	0	STO via FSoE is not active
	1	STO via FSoE is active
Bit 4		SBC status (SBC is active or not)
	0	SBC is not active (Brake is open)
	1	SBC is active (Brake is closed)
Bit 5		Safety functions status*1
	0	Safety functions are not activated.
	1	Safety function is activated.
Bit 6		Safety origin position detection status
	0	Safety origin position is not detected.
	1	Safety origin position is detected.
Bit 7		Safety function acceptance status
	0	Assigned safety functions can not be accepted.
	1	Assigned safety functions can be accepted.

*1. Indicates Logical OR of the status of STO via FSoE, SS1, SS2, SOS, SLS, SLP, SDI and SBC.

Subindex 82 hex: Mirror Safety Controlword

- Gives the status of the safety function mapped to 1610 hex. This object is for PDO Mapping to TxPDO and monitor the Safety Controlword.

Subindex 83 hex: Mirror Safety Statusword

- Gives the status of the safety function mapped to 1A10 hex. This object is for PDO Mapping to TxPDO and monitor the Safety Statusword.

Subindex 91 hex: Safety Controlword 1st Byte

- Gives the command status of the safety function.
- Mirror object of 6620-01 hex

Description of Set Values

Set value		Description
Bit 0		Gives the status of STO command.
	0	STO activate command issued
	1	STO activate command not issued
Bit 1		Gives the status of SS1 command 1.
	0	SS1 activate command issued
	1	SS1 activate command not issued
Bit 2		Gives the status of SS2 command 1.
	0	SS2 activate command issued
	1	SS2 activate command not issued
Bit 3		Gives the status of SOS command 1.
	0	SOS activate command issued
	1	SOS activate command not issued
Bit 5		Gives the status of SDI positive direction command.
	0	SDIp activate command issued
	1	SDIp activate command not issued
Bit 6		Gives the status of SDI negative direction command.
	0	SDIn activate command issued
	1	SDIn activate command not issued
Bit 7		Gives the status of safety error reset command.
	0	Error reset command not issued
	1	Error reset command issued

Subindex 92 hex: Safety Controlword 2nd Byte

- Gives the command status of the safety function which are mapped to 2nd byte of 1610th PDO mapping object.
- Mirror object of 6620-02 hex

Subindex A1 hex: Safety Statusword 1st Byte

- Gives the status of the safety function.
- Mirror object of 6621-01 hex

Description of Set Values

Set value		Description
Bit 0		Gives the STO status.
	0	Normal status
	1	STO status
Bit 3		Gives the SOS status 1.
	0	Normal status
	1	SOS status
Bit 5		Gives positive direction rotation status.
	0	No rotation or rotate to negative direction
	1	Rotate to positive direction
Bit 6		Gives negative direction rotation status.
	0	No rotation or rotate to positive direction
	1	Rotate to negative direction
Bit 7		Gives the safety error status.
	0	No error
	1	Error detected

Subindex A2 hex: Safety Statusword 2nd Byte

- Gives the status of the safety function.
- Mirror object of 6621-02 hex

Subindex B1 hex: FSoE Address

- Gives the FSoE slave address.
- Mirror object of F980-01 hex

9-9-4 4131 hex: Safety Command Monitor 1

Monitors the safety command.

Index (hex)	Sub-index (hex)	Object name	Setting range	Unit	Default setting	Data attri-bute	Size	Access	PDO map	Complete access	Modes of opera-tion
4131	---	Safety Com-mand Monitor 1	---	---	---	---	---	---	---	Possible	---
	00	Number of entries	---	---	93 hex	---	1 byte (U8)	RO	---	---	---
	81	FSoE Slave CMD	---	---	---	---	1 byte (U8)	RO	---	---	---
	82	FSoE Slave Con-n_ID	---	---	---	---	2 bytes (U16)	RO	---	---	---
	83	FSoE Slave CRC_0	---	---	---	---	2 bytes (U16)	RO	---	---	---
	91	FSoE Master CMD	---	---	---	---	1 byte (U8)	RO	---	---	---
	92	FSoE Master Conn_ID	---	---	---	---	2 bytes (U16)	RO	---	---	---
	93	FSoE Master CRC_0	---	---	---	---	2 bytes (U16)	RO	---	---	---

Subindex 81 hex: FSoE Slave CMD

- Gives the command which is sent from the slave.
- Mirror object of E600-01 hex

Subindex 82 hex: FSoE Slave Conn_ID

- Gives the connection ID which is sent from the slave.
- Mirror object of E600-02 hex

Subindex 83 hex: FSoE Slave CRC_0

- Gives the cyclic redundancy code which is sent from the slave.
- Mirror object of E600-03 hex

Subindex 91 hex: FSoE Master CMD

- Gives the command which is sent from the master.
- Mirror object of E700-01 hex

Subindex 92 hex: FSoE Master Conn_ID

- Gives the connection ID which is sent from the master.
- Mirror object of E700-02 hex

Subindex 93 hex: FSoE Master CRC_0

- Gives the cyclic redundancy code which is sent from the master.
- Mirror object of E700-03 hex

9-9-5 4132 hex: Safety Command Monitor 2

Monitors the safety command.

Index (hex)	Sub-index (hex)	Object name	Setting range	Unit	Default setting	Data attri-bute	Size	Access	PDO map	Complete access	Modes of opera-tion
4132	---	Safety Com-mand Monitor 2	---	---	---	---	---	---	---	---	---
	00	Number of entries	---	---	A0 hex	---	1 byte (U8)	RO	---	---	---
	81	Safety Connec-tion Status	---	---	---	---	1 bit (BOOL)	RO	---	---	---
	92	Error Acknowl-edge	---	---	---	---	1 bit (BOOL)	RO	---	---	---
	A0	STO Command	---	---	---	---	1 bit (BOOL)	RO	---	---	---

Subindex 81 hex: Safety Connection Status

- This flag indicates that the safety connection is executed. When the value is *1*, the safety connection is in execution.
- It is used for the input to the Activate terminal of Safety FB or connection/disconnection applications of the safety equipment.
- Mirror object of E601-01 hex

Subindex 92 hex: Error Acknowledge

- Gives an error of the safety function.
- Mirror object of 6632-00 hex

● Description of Set Values

Set value	Description
0	No error
1	Error detected

Subindex A0 hex: STO Command

- Gives the STO status.
- Mirror object of 6640-00 hex

● Description of Set Values

Set value	Description
0	Normal status
1	STO status

9-9-6 4140 hex: Lifetime Information

Gives the lifetime information of the Servo Drive. When the set value of each lifetime information is FFFF FFFF hex, it means that data is corrupted.

Index (hex)	Sub-index (hex)	Object name	Setting range	Unit	Default setting	Data attri-bute	Size	Access	PDO map	Complete access	Modes of opera-tion
4140	---	Lifetime Infor-mation	---	---	---	---	---	---	---	Possible	---
	00	Number of entries	---	---	FF hex	---	1 byte (U8)	RO	---	---	---
	01	Safety relay life-time warning detection threshold	0 to 10,000,000	Time	100,000	R	4 bytes (INT32)	RW	---	---	---
	81	Total Power ON Time	---	min	---	---	4 bytes (INT32)	RO	---	---	---
	82	Total Capacitor Operating Time	---	min	---	---	4 bytes (INT32)	RO	---	---	---
	83	Capacitor Oper-ating Time Ratio	---	0.1%	---	---	4 bytes (INT32)	RO	---	---	---
	84	Inrush Current Prevention Relay ON Count	---	Time	---	---	4 bytes (INT32)	RO	---	---	---
	85	Dynamic Brake Relay ON Count	---	Time	---	---	4 bytes (INT32)	RO	---	---	---
	86	Motor Operat-ing Time	---	min	---	---	4 bytes (INT32)	RO	---	---	---
	88	Safety Relay ON Count	---	Time	---	---	4 bytes (INT32)	RO	---	---	---
	F1	Motor Operat-ing Time Clear	---	---	---	A	4 bytes (INT32)	W	---	---	---
	F2	Clear	---	---	---	A	4 bytes (INT32)	W	---	---	---
	F3	Safety Relay On Count Clear	---	---	---	A	4 bytes (INT32)	W	---	---	---
	FF	Clear Status	---	---	---	---	4 bytes (INT32)	RO	---	---	---

Subindex 01 hex: Safety Relay Lifetime Warning Detection Threshold

- Sets the threshold value to detect Safety relay lifetime warning.
- When this value is set to 0, this function is disabled.

Subindex 81 hex: Total Power ON Time

- Gives the total power ON time of the Servo Drive (control power supply).
- The data is saved in the non-volatile memory approximately every hour.

Subindex 82 hex: Total Capacitor Operating Time

- Gives the total operating time of the capacitor.

Subindex 83 hex: Capacitor Operating Time Ratio

- Gives the ratio of the present operating time to the lifetime of the capacitor.
- When the ratio is *100%*, the lifetime reaches the end.

Subindex 84 hex: Inrush Current Prevention Relay ON Count

- Gives the number of times when the inrush current prevention relay is changed to ON.
- The data is saved in the non-volatile memory approximately every hour.

Subindex 85 hex: Dynamic Brake Relay ON Count

- Gives the number of times the command was sent to change the dynamic brake relay contact to ON. This is not the number of deceleration operations performed with the dynamic brake.
- The data is saved in the non-volatile memory approximately every hour.

Subindex 86 hex: Motor Operating Time

- Gives the total time when the motor is not in a stop state.
- The data is saved in the non-volatile memory approximately every hour.

Subindex 88 hex: Safety Relay ON Count

- Gives the count number the Safety relay turn to ON.

Subindex F1 hex: Motor Operating Time Clear

- Clears the motor operating time counter. Clear is executed by the writing of 6A646165 hex to this object.

Subindex F2 hex: Clear

- Clears the lifetime information by the writing of 6A64 6165 hex. Clear is executed only when the Lifetime Information Corruption Warning exists.

Subindex F3 hex: Safety Relay On Count Clear

- Clears the Safety relay on count by the writing of 6A64 6165 hex.

Subindex FF hex: Clear Status

- Gives the status of the Motor Operating Time Clear and Lifetime Information Clear.

● Description of Set Values

Set value		Description
Bit 0		Status of Motor Operating Time Clear
	0	Clear is not executed or completed
	1	Clear in execution
Bit 1		Status of Lifetime Information Clear
	0	Clear is not executed or completed
	1	Clear in execution

9-9-7 4150 hex: Overload

Sets the overload detection and gives the load ratio.

Index (hex)	Sub-index (hex)	Object name	Setting range	Unit	Default setting	Data attri-bute	Size	Access	PDO map	Complete access	Modes of opera-tion
4150	---	Overload	---	---	---	---	---	---	---	Possible	---
	00	Number of entries	---	---	83 hex	---	1 byte (U8)	RO	---	---	---
	01	Warning Notifica-tion Level	0 to 100	%	85	A	4 bytes (INT32)	RW	---	---	---
	81	Load Ratio	---	%	---	---	4 bytes (INT32)	R	TxPDO	---	---
	82	Servo Drive Load Ratio	---	%	---	---	4 bytes (INT32)	R	---	---	---
	83	Motor Load Ratio	---	%	---	---	4 bytes (INT32)	R	---	---	---

Subindex 01 hex: Warning Notification Level

- Sets the level to notify the Overload Warning. When the level reaches 100%, an Overload Error occurs.

Subindex 81 hex: Load Ratio

- Gives the load ratio of Servo Drive or motor, whichever is higher.
- The value of load ratio is the average of the last five seconds.

Subindex 82 hex: Servo Drive Load Ratio

- Gives the load ratio of the Servo Drive.
- The value of load ratio is the average of the last five seconds.
- The value of load ratio is the ratio of the current to the rated current

$$\text{Servo Drive load ratio (\%)} = \frac{\text{Servo Drive current}}{\text{Servo Drive rated current}} \times 100$$

Subindex 83 hex: Motor Load Ratio

- Gives the load ratio of the motor.
- The value of load ratio is the average of the last five seconds.
- The value of load ratio is the ratio of the current to the rated current.

$$\text{Servomotor load ratio (\%)} = \frac{\text{Servomotor current}}{\text{Servomotor rated current}} \times 100$$

9-10 Display-related Objects

These objects are used for the display setting.

Index (hex)	Sub-index (hex)	Object name	Setting range	Unit	Default setting	Data attri-bute	Size	Access	PDO map	Complete access	Modes of operation
4210	---	Display	---	---	---	---	---	---	---	Possible	---
	00	Number of entries	---	---	01 hex	---	1 byte (U8)	RO	---	---	---
	01	LED Display Selection	0 to 1	---	0	A	4 bytes (INT32)	RW	---	---	---

Subindex 81 hex: LED Display Selection

- Selects data to be displayed on the 7-segment display on the front panel.

● Description of Set Values

Set value	Description
0	PDS state (simple)
1	EtherCAT node address

9-11 Power Device-related Objects

These objects are used for the power device setting.

9-11-1 4310 hex: Regeneration

Sets the regeneration resistor.

Index (hex)	Sub-index (hex)	Object name	Setting range	Unit	Default setting	Data attri-bute	Size	Access	PDO map	Complete access	Modes of oper-ation
4310	---	Regeneration	---	---	---	---	---	---	---	Possible	---
	00	Number of entries	---	---	81 hex	---	1 byte (U8)	RO	---	---	---
	01	External Regen-eration Resistor Selection	0 to 1	---	0	R	4 bytes (INT32)	RW	---	---	---
	02	External Regen-eration Resis-tance	1 to 2,147,483,647	0.1 Ω	1	R	4 bytes (INT32)	RW	---	---	---
	03	External Regen-eration Allow-able Power	1 to 2,147,483,647	W	1	R	4 bytes (INT32)	RW	---	---	---
	04	External Regeneration Overload Ratio	0 to 100	%	85	R	4 bytes (INT32)	RW	---	---	---
	81	Regeneration Load Ratio	---	%	---	---	4 bytes (INT32)	RO	TxPDO	---	---

Subindex 01 hex: External Regeneration Resistor Selection

- Selects whether to use or not the external regeneration resistor.

● Description of Set Values

Set value	Description
0	Not use the external regeneration resistor
1	Use the external regeneration resistor

Subindex 02 hex: External Regeneration Resistance

- Sets the resistance value of the external regeneration resistor in use. It is used for regeneration over-load detection.

Subindex 03 hex: External Regeneration Allowable Power

- Sets the power that can be consumed by the external regeneration resistor. It is necessary to set the allowable power. The rated power must not be set.

Subindex 04 hex: External Regeneration Overload Ratio

- Sets the regenerative load ratio to notify an error when regeneration is processed by the external regeneration resistor.

Subindex 81 hex: Regeneration Load Ratio

- Gives the regenerative load ratio.

9-11-2 4320 hex: Main Circuit Power Supply

Sets the main circuit power supply.

Index (hex)	Sub-index (hex)	Object name	Setting range	Unit	Default setting	Data attri-bute	Size	Access	PDO map	Complete access	Modes of opera-tion
4320	---	Main Circuit Power Supply	---	---	---	---	---	---	---	Possible	---
	00	Number of entries	---	---	82 hex	---	1 byte (U8)	RO	---	---	---
	01	Momentary Hold Time	1 to 2,000	ms	15	R	4 bytes (INT32)	RW	---	---	---
	02	Phase Loss Detection Enable	0 to 1	---	1	R	4 bytes (INT32)	RW	---	---	---
	03	Capacitor Dis-charge Enable	0 to 1	---	1	R	4 bytes (INT32)	RW	---	---	---
	81	P-N Voltage	---	V	---	---	4 bytes (INT32)	RO	---	---	---
	82	Servo Drive Tem-perature	---	°C	---	---	4 bytes (INT32)	RO	---	---	---

Subindex 01 hex: Momentary Hold Time

- When the main circuit power supply is cut off for the time or more set in the Momentary Hold Time, it is recognized as the cutoff of the main circuit power supply and the PDS state transitions to Switch on disabled.

Precautions for Correct Use

When a single-phase power supply is used, the duration of undervoltage for the main circuit power supply may be several milliseconds longer than the actual interruption time, depending on the timing or phase at which a momentary power interruption occurs. To avoid false detec-tion, set a value which is approximately five milliseconds longer than the interruption time.

Subindex 02 hex: Phase Loss Detection Enable

- Selects whether to enable or disable the phase loss detection function of the main circuit power sup-ply input.
- The model for both single- and/3-phase power supply operates according to the setting.
- This function does not work for the model for the single-phase power supply.

● Description of Set Values

Set value	Description
0	Disabled
1	Enabled

Subindex 03 hex: Capacitor Discharge Enable

- Selects whether to enable or disable the capacitor discharge enable function.
- When the function is enabled, the electric charge in the capacitor is discharged through the internal or external regeneration resistor by turning the main circuit power supply OFF while the control power supply is ON.

● Description of Set Values

Set value	Description
0	Disabled
1	Enabled

Subindex 81 hex: P-N Voltage

- Gives the P-N voltage.

Subindex 82 hex: Servo Drive Temperature

- Gives the internal temperature of the Servo Drive.

9-12 External Device-related Objects

These objects are used for the motor information display.

Index (hex)	Sub-index (hex)	Object name	Setting range	Unit	Default setting	Data attri-bute	Size	Access	PDO map	Complete access	Modes of oper-ation
4410	---	Motor Identity	---	---	---	---	---	---	---	Possible	---
	00	Number of entries	---	---	FF hex	---	1 byte (U8)	RO	---	---	---
	81	Motor Model	---	---	---	---	20 bytes (VS)	RO	---	---	---
	82	Serial Number	---	---	---	---	16 bytes (VS)	RO	---	---	---
	83	Last Connected Motor Model	---	---	---	---	20 bytes (VS)	RO	---	---	---
	84	Last Connected Serial Number	---	---	---	---	16 bytes (VS)	RO	---	---	---
	90	Motor Type	---	---	---	---	2 bytes (U16)	RO	---	---	---
	92	Motor Manufacturer	---	---	---	---	20 bytes (VS)	RO	---	---	---
	F1	Motor Setup	---	---	0	A	4 bytes (INT32)	W	---	---	---
	FF	Setup Status	---	---	---	---	4 bytes (INT32)	RO	---	---	---

Subindex 81 hex: Motor Model

- Gives the model of the motor which is connected to the Servo Drive.

Subindex 82 hex: Serial Number

- Gives the serial number of the motor which is connected to the Servo Drive.

Subindex 83 hex: Last Connected Motor Model

- Gives the model of the motor which was connected the last time.

Subindex 84 hex: Last Connected Serial Number

- Gives the serial number of the motor which was connected the last time.

Subindex 90 hex: Motor Type

- Gives the type of connected motor.
- Mirror object of 6402 hex

Subindex 92 hex: Motor Manufacturer

- Gives the motor manufacturer name.
- Mirror object of 6404 hex

Subindex F1 hex: Motor Setup

- The Motor ID Setup is executed by the writing of 7465 736D hex.

Subindex FF hex: Setup Status

- Gives the execution status of Motor Setup.

● Description of Set Values

Set value	Description
0	Setup is not executed or completed
1	Setup in execution

9-13 Encoder-related Objects

These objects are used for the encoder setting.

Index (hex)	Sub-index (hex)	Object name	Setting range	Unit	Default setting	Data attri-bute	Size	Access	PDO map	Complete access	Modes of opera-tion
4510	---	Encoder	---	---	---	---	---	---	---	Possible	---
	00	Number of entries	---	---	FF hex	---	1 byte (U8)	RO	---	---	---
	01	Operation Selec-tion when Using Absolute Encoder	0 to 2	---	2	R	4 bytes (INT32)	RW	---	---	---
	02	Absolute Encoder Counter Overflow Warn-ing Level	0 to 32,767	rotation	1,500	A	4 bytes (INT32)	RW	---	---	---
	81	Serial Number	---	---	---	---	16 bytes (VS)	RO	---	---	---
	82	Resolution per Rotation	---	---	---	---	4 bytes (INT32)	RO	---	---	---
	84	One-rotation Data	---	Encoder unit	---	---	4 bytes (INT32)	RO	---	---	---
	85	Multi-rotation Data	---	rotation	---	---	4 bytes (INT32)	RO	---	---	---
	86	Encoder Com-munications Error Count	---	---	---	---	4 bytes (INT32)	RO	---	---	---
	87	Electric Angle	---	°	---	---	4 bytes (INT32)	RO	---	---	---
	88	Mechanical Angle	---	°	---	---	4 bytes (INT32)	RO	---	---	---
	89	Encoder Tem-perature	---	°C	---	---	4 bytes (INT32)	RO	---	---	---
	F1	Absolute Encoder Setup	---	---	---	A	4 bytes (U32)	W	---	---	---
	F2	Encoder Com-munications Error Count Clear	---	---	---	A	4 bytes (U32)	W	---	---	---
	FF	Clear Status	---	---	---	---	4 bytes (U32)	RO	---	---	---

Subindex 01 hex: Operation Selection when Using Absolute Encoder

- Selects the operating method for the absolute encoder.

● Description of Set Values

Set value	Description
0	Use as the absolute encoder
1	Use as the incremental encoder
2	Used as the absolute encoder and ignore the absolute encoder counter overflow.

Subindex 02 hex: Absolute Encoder Counter Overflow Warning Level

- Sets the level to notify the warning.
- When the **Operation Selection when Using Absolute Encoder** is set to *0* (use as the absolute encoder), if the absolute value of encoder multi-rotation number exceeds the set value, the Absolute Encoder Counter Overflow Warning is output.

● Description of Set Values

Set value	Description
0 to 2,047	Operates with the set absolute value counter over warning level.
2,048 to 32,767	The absolute value counter over warning level operates as 2,047.

Subindex 81 hex: Serial Number

- Gives the encoder serial number.

Subindex 82 hex: Resolution per Rotation

- Gives the resolution per rotation.

Subindex 84 hex: One-rotation Data

- Gives the one-rotation position of the encoder. When the phase-Z position is 0, if the motor rotates counterclockwise as viewed from the motor load side, the encoder value increases.

Subindex 85 hex: Multi-rotation Data

- Gives the number of encoder rotations. The encoder value increases each time the motor rotates counterclockwise as viewed from the motor load side.

Subindex 86 hex: Encoder Communications Error Count

- Obtains the total number of encoder errors via serial communications.

Subindex 87 hex: Electric Angle

- Gives the electric angle.
- In the counterclockwise rotation, 0° indicates the position which is the zero cross point (rising) of the phase-U inductive voltage.
- The encoder value increases when the motor rotates counterclockwise, and the display range is from 0 to 359°.

Subindex 88 hex: Mechanical Angle

- Gives the one-rotation data of the encoder as the mechanical angle.
- The encoder value increases when the motor rotates counterclockwise, and the display range is from 0 to 359°.

Subindex 89 hex: Encoder Temperature

- Gives the internal temperature of the encoder which is mounted on the motor, or the internal temperature of the motor.

Subindex F1 hex: Absolute Encoder Setup

- Clears the multi-rotation counter of the absolute encoder. Clear is executed by the writing of *6A646165 hex* to this object.
- Execute the clearing during Servo OFF or while the Servomotor stops.

Subindex F2 hex: Encoder Communications Error Count Clear

- Clears the Encoder Communications Error Count. Clear is executed by the writing of *1* to this object.

Subindex FF hex: Clear Status

- Gives the status of the multi-rotation counter of the absolute encoder and Encoder Communications Error Count Clear.

● Description of Set Values

Set value		Description
Bit 0		Status of Absolute Encoder Setup
	0	Clear is not executed or completed
	1	Clear in execution
Bit 1		Status of Encoder Communications Error Count Clear
	0	Clear is not executed or completed
	1	Clear in execution

9-14 I/O-related Objects

These objects are used for input/output.

9-14-1 4600 hex: I/O Monitor

Index (hex)	Sub-index (hex)	Object name	Setting range	Unit	Default setting	Data attri-bute	Size	Access	PDO map	Complete access	Modes of opera-tion
4600	---	I/O Monitor	---	---	---	---	---	---	---	Possible	---
	00	Number of entries	---	---	82 hex	---	1 byte (U8)	RO	---	---	---
	81	Physical I/O	---	---	---	---	4 bytes (U32)	RO	TxPDO	---	---
	82	Safety IO power supply	---	---	---	---	4 bytes (U32)	RO	TxPDO	---	---

Subindex 81 hex: Physical I/O

- Gives each I/O terminal status of the Servo Drive.
- 0: Low, 1: High

● Description of Set Values

Bit	Signal name	Symbol
0	General Input 1	IN1
1	General Input 2	IN2
2	General Input 3	IN3
3	General Input 4	IN4
4	General Input 5	IN5
5	General Input 6	IN6
6	General Input 7	IN7
7	General Input 8	IN8
14	Safety Input 1	STO1
15	Safety Input 2	STO2
16	Error Output	ERR
17	General Output 1	OUT1
18	General Output 2	OUT2
19	General Output 3	OUT3
20	SOPT1 input	SOPT1
21	SOPT2 input	SOPT2
22	SBC output	SBC
23	Relay feedback input	SBC RFB
30	Brake Interlock Output	BKIR
31	EDM Output	EDM

Subindex 82 hex: Safety IO Power

- Gives safety IO power status of the Servo Drive.
- 0: Low, 1: High

● Description of Set Values

Bit	Signal name
0	IOV monitor
1	SBC PS monitor

9-14-2 4601 hex: Function Input

Gives each function input status of the Servo Drive.

Index (hex)	Sub-index (hex)	Object name	Setting range	Unit	Default setting	Data attri-bute	Size	Access	PDO map	Complete access	Modes of operation
4601	---	Function Input	---	---	---	---	---	---	---	Possible	---
	00	Number of entries	---	---	82 hex	---	1 byte (U8)	RO	---	---	---
	81	Monitor Input	---	---	---	---	4 bytes (INT32)	RO	TxPDO	---	---
	82	Digital inputs	---	---	---	---	4 bytes (U32)	RO	---	---	---

Subindex 81 hex: Monitor Input

- Gives the monitor input status.

● Description of Set Values

Bit	Signal name	Symbol
0	Monitor Input 1	MON1
1	Monitor Input 2	MON2
2	Monitor Input 3	MON3
3	Monitor Input 4	MON4
4	Monitor Input 5	MON5
5	Monitor Input 6	MON6
6	Monitor Input 7	MON7
7	Monitor Input 8	MON8

Subindex 82 hex: Digital Inputs

- Gives each function I/O status of the Servo Drive.
- Mirror object of 60FD hex

Bit Descriptions

Bit	Signal name	Symbol	Value	Description
0	Negative Drive Prohibition Input	NOT	0	OFF
			1	ON
1	Positive Drive Prohibition Input	POT	0	OFF
			1	ON
2	Home Proximity Input	DEC	0	OFF
			1	ON
16	Encoder Phase Z Detection	PC	0	Phase-Z signal not detected during communication cycle
			1	Phase-Z signal detected during communication cycle
17	External Latch Input 1	EXT1	0	OFF
			1	ON
18	External Latch Input 2	EXT2	0	OFF
			1	ON
20	Monitor Input 1	MON1	0	OFF
			1	ON
21	Monitor Input 2	MON2	0	OFF
			1	ON
22	Monitor Input 3	MON3	0	OFF
			1	ON
23	Positive Torque Limit Input	PCL	0	OFF
			1	ON
24	Negative Torque Limit Input	NCL	0	OFF
			1	ON
25	Error Stop Input	ESTP	0	OFF
			1	ON
26	Brake Interlock Output	BKIR	0	Brake held
			1	Brake released
27	Safety input 1	STO1	0	OFF
			1	ON
28	Safety input 2	STO2	0	OFF
			1	ON
29	EDM Output	EDM	0	OFF
			1	ON
30	Monitor Input 4	MON4	0	OFF
			1	ON
31	Monitor Input 5	MON5	0	OFF
			1	ON

9-14-3 4602 hex: Function Output

Changes the function output status.

Index (hex)	Subindex (hex)	Object name	Setting range	Unit	Default setting	Data attri-bute	Size	Access	PDO map	Com-plete access	Modes of oper-ation
4602	---	Function Output	---	---	---	---	---	---	---	Possible	---
	00	Number of entries	---	---	F1 hex	---	1 byte (U8)	RO	---	---	---
	01	Bit Mask	0000 0000 to FFFF FFFF hex	---	0000 0000 hex	A	4 bytes (U32)	RW	---	---	---
	F1	Physical Out-puts	0000 0000 to FFFF FFFF hex	---	0000 0001 hex	A	4 bytes (U32)	W	---	---	---

Subindex 01 hex: Bit Mask

- Selects whether to enable or disable the function output.
- Mirror object of 60FE-02 hex

● Description of Set Values

Bit	Signal	Symbol	Value	Description
0	NC Contact Brake Interlock Output*1	BKIR_b	0	Output disabled
			1	Output enabled
16	Remote Output 1	R-OUT1	0	Output disabled
			1	Output enabled
17	Remote Output 2	R-OUT2	0	Output disabled
			1	Output enabled
18	Remote Output 3	R-OUT3	0	Output disabled
			1	Output enabled
24	Gain Switching	G-SEL	0	Setting disabled
			1	Setting enabled
28	NO contact Brake Interlock Output*1	BKIR_a	0	Output disable
			1	Output enable

*1. Even when Bit Mask for Brake Interlock Output is *0* (output disabled), the Servo Drive can perform the brake control.

Subindex F1 hex: Physical Outputs

- Changes the function output status by the writing of a value to the corresponding bit.
- Mirror object of 60FE-01 hex

● Description of Set Values

Bit	Signal	Symbol	Value	Description
0	NC Contact Brake Interlock Output	BKIR_b	0	Brake released
			1	Brake held
16	Remote Output 1	R-OUT1	0	OFF
			1	ON

Bit	Signal	Symbol	Value	Description
17	Remote Output 2	R-OUT2	0	OFF
			1	ON
18	Remote Output 3	R-OUT3	0	OFF
			1	ON
24	Gain Switching	G-SEL	0	Gain 1
			1	Gain 2
28	NO contact Brake Interlock Output	BKIR_a	0	Brake held
			1	Brake released

9-14-4 4604 hex: Control Input Change Count

Counts the number of changes in control inputs.

Index (hex)	Subindex (hex)	Object name	Setting range	Unit	Default setting	Data attribute	Size	Access	PDO map	Complete access	Modes of operation
4604	---	Control Input Change Count	---	---	---	---	---	---	---	Possible	---
	00	Number of entries	---	---	FF hex	---	1 byte (U8)	RO	---	---	---
	81 to 88	General Input 1 to 8	---	---	---	---	4 bytes (U32)	RO	---	---	---
	F1	Count Clear	0 to 1	---	---	A	4 bytes (INT32)	W	---	---	---
	FF	Count Clear Execution Status	---	---	---	---	4 bytes (INT32)	RO	---	---	---

Subindex 81 to 88 hex: General Input 1 to 8

- Counts the number of changes in General Input 1 to 8.

Subindex F1 hex: Count Clear

- Clears the Control Input Change Count. Clear is executed by the writing of *1* to this object.

Subindex FF hex: Count Clear Execution Status

- Gives the status of the Control Input Change Count Clear.

● Description of Set Values

Set value	Description
0	Clear completed
1	Clear in execution

9-14-5 4605 hex: Control Output Change Count

Counts the number of changes in control outputs.

Index (hex)	Subindex (hex)	Object name	Setting range	Unit	Default setting	Data attri-bute	Size	Access	PDO map	Complete access	Modes of oper-ation
4605	---	Control Output Change Count	---	---	---	---	---	---	---	Possible	---
	00	Number of entries	---	---	FF hex	---	1 byte (U8)	RO	---	---	---
	81	Error Output	---	---	---	---	4 bytes (U32)	RO	---	---	---
	82 to 84	General Output 1 to 3	---	---	---	---	4 bytes (U32)	RO	---	---	---
	F1	Count Clear	0 to 1	---	0	A	4 bytes (INT32)	W	---	---	---
	FF	Count Clear Execution Sta-tus	---	---	---	---	4 bytes (INT32)	RO	---	---	---

Subindex 81 hex: Error Output

- Counts the number of changes in error output.

Subindex 82 to 84 hex: General Output 1 to 3

- Counts the number of changes in General Output 1 to 3.

Subindex F1 hex: Count Clear

- Clears the Control Output Change Count. Clear is executed by the writing of *1* to this object.

Subindex FF hex: Count Clear Execution Status

- Gives the status of the Control Output Change Count Clear.

● Description of Set Values

Set value	Description
0	Clear completed
1	Clear in execution

9-14-6 4610 hex: Brake Interlock Output

Sets the brake interlock operation. Refer to *7-6 Brake Interlock* on page 7-22 for details.

Index (hex)	Sub-index (hex)	Object name	Setting range	Unit	Default setting	Data attri-bute	Size	Access	PDO map	Complete access	Modes of operation
4610	---	Brake Interlock Output	---	---	---	---	---	---	---	Possible	---
	00	Number of entries	---	---	04 hex	---	1 byte (U8)	RO	---	---	---
	01	Enable	0 to 1	---	1	R	4 bytes (INT32)	RW	---	---	---
	02	Timeout at Servo OFF	0 to 10,000	ms	500	E	4 bytes (INT32)	RW	---	---	---
	03	Threshold Speed at Servo OFF	30 to 3,000	r/min	30	E	4 bytes (INT32)	RW	---	---	---
	04	Hardware Delay Time	0 to 10,000	ms	0	E	4 bytes (INT32)	RW	---	---	---

Subindex 01 hex: Enable

- Set whether to enable or disable the brake interlock output.
- If this object is set to *0* (disabled), the Brake Interlock Output (BKIR) is turned ON (brake is released).
- If this object is set to *1* (enabled), the Brake Interlock Output (BKIR) is turned ON (brake is released) and OFF (brake is held) according to the Servo ON or Servo OFF state.

● Description of Set Values

Set value	Description
0	Disabled
1	Enabled

Subindex 02 hex: Timeout at Servo OFF

- Sets the time from when the OFF state of the operation command is detected (the power supply to the motor is OFF) until the Brake Interlock Output (BKIR) is turned OFF (brake is held), when the Servo OFF is performed during motor operation.
- When the Servo OFF is applied during motor operation, the motor decelerates to reduce rotation speed. The Brake Interlock Output (BKIR) is turned OFF (brake is held) after the set time elapses.
- During operation, the set value of **Threshold Speed at Servo OFF** may be detected earlier, and this may cause the Brake Interlock Output (BKIR) to turn OFF (brake is held).
- If the Brake Interlock Output (BKIR) is turned OFF (brake is held) because the set value of **Timeout at Servo OFF** is detected, a Brake Interlock Error (Error No. 97.00) will occur.

Subindex 03 hex: Threshold Speed at Servo OFF

- Sets the motor speed at which the Brake Interlock Output (BKIR) can be turned OFF (brake is held) after the Servo OFF command is detected, when the Servo OFF is performed during motor operation.
- During operation, the set value of **Timeout at Servo OFF** may be detected earlier, and this may cause the Brake Interlock Output (BKIR) to turn OFF (brake is held).

Subindex 04 hex: Hardware Delay Time

- Sets the delay time of the mechanical brake operation, etc.
- Outputs the timing signal of the external brake by the use of this delay time, when the Servo OFF is performed during motor stop.
- This object is used for the time from when the Servo turns ON until the Brake Interlock Output (BKIR) is turned ON (brake is released) and for the time from when the Brake Interlock Output (BKIR) is turned OFF (brake is held) until the Servo turns OFF. For this purpose, set the brake attraction time or release time, whichever is longer.

9-14-7 4620 hex: Encoder Dividing Pulse Output

Sets the encoder dividing pulse output.

Index (hex)	Sub-index (hex)	Object name	Setting range	Unit	Default setting	Data attri-bute	Size	Access	PDO map	Complete access	Modes of operation
4620	---	Encoder Dividing Pulse Output	---	---	---	---	---	---	---	Possible	---
	00	Number of entries	---	---	04 hex	---	1 byte (U8)	RO	---	---	---
	01	Enable	0 to 1	---	0	R	4 bytes (INT32)	RW	---	---	---
	02	Dividing Numera-tor	0 to 2,097,152	---	2,500	R	4 bytes (INT32)	RW	---	---	---
	03	Dividing Denomi-nator	0 to 2,097,152	---	0	R	4 bytes (INT32)	RW	---	---	---
	04	Output Reverse Selection	0 to 1	---	0	R	4 bytes (INT32)	RW	---	---	---

Subindex 01 hex: Enable

- Selects whether to enable or disable the encoder dividing pulse output function.

● Description of Set Values

Set value	Description
0	Disabled
1	Enabled

Subindex 02 hex: Dividing Numerator

- Sets the number of output pulses per motor rotation.
- When **Dividing Denominator** (4620-03 hex) is set to 0, set the value of enable dividing numerator from 0 to 262144. When you set the value to 262145 or more, this function is activated at 262144.

Subindex 03 hex: Dividing Denominator

- For applications for which the number of output pulses per rotation is not an integer, set this object to a value other than 0. By setting a value other than 0, the number of output pulses per motor rotation can be set with the dividing ratio which is calculated from the dividing numerator and dividing denominator.

● Description of Set Values

Set value	Description
0	Number of output pulses per rotation = Encoder Dividing Numerator × 4
Others	Number of output pulses per rotation = Encoder Dividing Numerator ÷ Encoder Dividing Denominator × Encoder Resolution

Subindex 04 hex: Output Reverse Selection

- Selects whether to reverse the encoder dividing pulse output or not.

● Description of Set Values

Set value	Description
0	Not reverse
1	Reverse

9-15 General-purpose Input Setting Objects

These objects are used for the general-purpose input setting. Refer to *7-1 General-purpose Input Signals* on page 7-3 for details.

9-15-1 Setting

This section explains the contents of the general-purpose input setting. These setting items are common to all general-purpose inputs.

Subindex 01 hex: Port Selection

- Selects the port to be allocated.

● Description of Set Values

Set value	Description
0	No allocation
1	General Input 1 (IN1)
2	General Input 2 (IN2)
3	General Input 3 (IN3)
4	General Input 4 (IN4)
5	General Input 5 (IN5)
6	General Input 6 (IN6)
7	General Input 7 (IN7)
8	General Input 8 (IN8)

Subindex 02 hex: Logic Selection

- Sets 0 (positive logic (NO contact)) or 1 (negative logic (NC contact)).

● Description of Set Values

Set value	Description
0	Positive logic (NO contact)
1	Negative logic (NC contact)

Subindex 81 hex: Signal Status

- Gives the signal status.

● Description of Set Values

Set value	Description
0	Inactive
1	Active

9-15-2 4630 hex: Positive Drive Prohibition Input

Sets the Positive Drive Prohibition Input (POT).

Index (hex)	Sub-index (hex)	Object name	Setting range	Unit	Default setting	Data attri-bute	Size	Access	PDO map	Complete access	Modes of operation
4630	---	Positive Drive Prohibition Input	---	---	---	---	---	---	---	Possible	---
	00	Number of entries	---	---	81 hex	---	1 byte (U8)	RO	---	---	---
	01	Port Selection	0 to 8	---	2	R	4 bytes (INT32)	RW	---	---	---
	02	Logic Selection	0 to 1	---	1	R	4 bytes (INT32)	RW	---	---	---
	81	Signal Status	---	---	---	---	4 bytes (INT32)	RO	---	---	---

9-15-3 4631 hex: Negative Drive Prohibition Input

Sets the Negative Drive Prohibition Input (NOT).

Index (hex)	Sub-index (hex)	Object name	Setting range	Unit	Default setting	Data attri-bute	Size	Access	PDO map	Complete access	Modes of operation
4631	---	Negative Drive Prohibition Input	---	---	---	---	---	---	---	Possible	---
	00	Number of entries	---	---	81 hex	---	1 byte (U8)	RO	---	---	---
	01	Port Selection	0 to 8	---	3	R	4 bytes (INT32)	RW	---	---	---
	02	Logic Selection	0 to 1	---	1	R	4 bytes (INT32)	RW	---	---	---
	81	Signal Status	---	---	---	---	4 bytes (INT32)	RO	---	---	---

9-15-4 4632 hex: External Latch Input 1

Sets the External Latch Input 1 (EXT1).

Index (hex)	Sub-index (hex)	Object name	Setting range	Unit	Default setting	Data attri-bute	Size	Access	PDO map	Complete access	Modes of operation
4632	---	External Latch Input 1	---	---	---	---	---	---	---	Possible	---
	00	Number of entries	---	---	81 hex	---	1 byte (U8)	RO	---	---	---
	01	Port Selection	0 to 8	---	7	R	4 bytes (INT32)	RW	---	---	---
	02	Logic Selection	0 to 1	---	0	R	4 bytes (INT32)	RW	---	---	---
	81	Signal Status	---	---	---	---	4 bytes (INT32)	RO	---	---	---

9-15-5 4633 hex: External Latch Input 2

Sets the External Latch Input 2 (EXT2).

Index (hex)	Sub-index (hex)	Object name	Setting range	Unit	Default setting	Data attri-bute	Size	Access	PDO map	Complete access	Modes of operation
4633	---	External Latch Input 2	---	---	---	---	---	---	---	Possible	---
	00	Number of entries	---	---	81 hex	---	1 byte (U8)	RO	---	---	---
	01	Port Selection	0 to 8	---	8	R	4 bytes (INT32)	RW	---	---	---
	02	Logic Selection	0 to 1	---	0	R	4 bytes (INT32)	RW	---	---	---
	81	Signal Status	---	---	---	---	4 bytes (INT32)	RO	---	---	---

9-15-6 4634 hex: Home Proximity Input

Sets the Home Proximity Input (DEC).

Index (hex)	Sub-index (hex)	Object name	Setting range	Unit	Default setting	Data attri-bute	Size	Access	PDO map	Complete access	Modes of operation
4634	---	Home Proximity Input	---	---	---	---	---	---	---	Possible	---
	00	Number of entries	---	---	81 hex	---	1 byte (U8)	RO	---	---	---
	01	Port Selection	0 to 8	---	4	R	4 bytes (INT32)	RW	---	---	---
	02	Logic Selection	0 to 1	---	0	R	4 bytes (INT32)	RW	---	---	---
	81	Signal Status	---	---	---	---	4 bytes (INT32)	RO	---	---	---

9-15-7 4635 hex: Positive Torque Limit Input

Sets the Positive Torque Limit Input (PCL).

Index (hex)	Sub-index (hex)	Object name	Setting range	Unit	Default setting	Data attri-bute	Size	Access	PDO map	Complete access	Modes of operation
4635	---	Positive Torque Limit Input	---	---	---	---	---	---	---	Possible	---
	00	Number of entries	---	---	81 hex	---	1 byte (U8)	RO	---	---	---
	01	Port Selection	0 to 8	---	0	R	4 bytes (INT32)	RW	---	---	---
	02	Logic Selection	0 to 1	---	0	R	4 bytes (INT32)	RW	---	---	---
	81	Signal Status	---	---	---	---	4 bytes (INT32)	RO	---	---	---

9-15-8 4636 hex: Negative Torque Limit Input

Sets the Negative Torque Limit Input (NCL).

Index (hex)	Sub-index (hex)	Object name	Setting range	Unit	Default setting	Data attri-bute	Size	Access	PDO map	Complete access	Modes of operation
4636	---	Negative Torque Limit Input	---	---	---	---	---	---	---	Possible	---
	00	Number of entries	---	---	81 hex	---	1 byte (U8)	RO	---	---	---
	01	Port Selection	0 to 8	---	0	R	4 bytes (INT32)	RW	---	---	---
	02	Logic Selection	0 to 1	---	0	R	4 bytes (INT32)	RW	---	---	---
	81	Signal Status	---	---	---	---	4 bytes (INT32)	RO	---	---	---

9-15-9 4637 hex: Error Stop Input

Sets the Error Stop Input (ESTP).

Index (hex)	Sub-index (hex)	Object name	Setting range	Unit	Default setting	Data attri-bute	Size	Access	PDO map	Complete access	Modes of operation
4637	---	Error Stop Input	---	---	---	---	---	---	---	Possible	---
	00	Number of entries	---	---	81 hex	---	1 byte (U8)	RO	---	---	---
	01	Port Selection	0 to 8	---	1	R	4 bytes (INT32)	RW	---	---	---
	02	Logic Selection	0 to 1	---	1	R	4 bytes (INT32)	RW	---	---	---
	81	Signal Status	---	---	---	---	4 bytes (INT32)	RO	---	---	---

9-15-10 4638 hex: Monitor Input 1

Sets the Monitor Input 1 (MON1).

Index (hex)	Sub-index (hex)	Object name	Setting range	Unit	Default setting	Data attri-bute	Size	Access	PDO map	Complete access	Modes of operation
4638	---	Monitor Input 1	---	---	---	---	---	---	---	Possible	---
	00	Number of entries	---	---	81 hex	---	1 byte (U8)	RO	---	---	---
	01	Port Selection	0 to 8	---	5	R	4 bytes (INT32)	RW	---	---	---
	02	Logic Selection	0 to 1	---	0	R	4 bytes (INT32)	RW	---	---	---
	81	Signal Status	---	---	---	---	4 bytes (INT32)	RO	---	---	---

9-15-11 4639 hex: Monitor Input 2

Sets the Monitor Input 2 (MON2).

Index (hex)	Sub-index (hex)	Object name	Setting range	Unit	Default setting	Data attri-bute	Size	Access	PDO map	Complete access	Modes of operation
4639	---	Monitor Input 2	---	---	---	---	---	---	---	Possible	---
	00	Number of entries	---	---	81 hex	---	1 byte (U8)	RO	---	---	---
	01	Port Selection	0 to 8	---	6	R	4 bytes (INT32)	RW	---	---	---
	02	Logic Selection	0 to 1	---	0	R	4 bytes (INT32)	RW	---	---	---
	81	Signal Status	---	---	---	---	4 bytes (INT32)	RO	---	---	---

9-15-12 463A hex: Monitor Input 3

Sets the Monitor Input 3 (MON3).

Index (hex)	Sub-index (hex)	Object name	Setting range	Unit	Default setting	Data attri-bute	Size	Access	PDO map	Complete access	Modes of operation
463A	---	Monitor Input 3	---	---	---	---	---	---	---	Possible	---
	00	Number of entries	---	---	81 hex	---	1 byte (U8)	RO	---	---	---
	01	Port Selection	0 to 8	---	0	R	4 bytes (INT32)	RW	---	---	---
	02	Logic Selection	0 to 1	---	0	R	4 bytes (INT32)	RW	---	---	---
	81	Signal Status	---	---	---	---	4 bytes (INT32)	RO	---	---	---

9-15-13 463B hex: Monitor Input 4

Sets the Monitor Input 4 (MON4).

Index (hex)	Sub-index (hex)	Object name	Setting range	Unit	Default setting	Data attri-bute	Size	Access	PDO map	Complete access	Modes of operation
463B	---	Monitor Input 4	---	---	---	---	---	---	---	Possible	---
	00	Number of entries	---	---	81 hex	---	1 byte (U8)	RO	---	---	---
	01	Port Selection	0 to 8	---	0	R	4 bytes (INT32)	RW	---	---	---
	02	Logic Selection	0 to 1	---	0	R	4 bytes (INT32)	RW	---	---	---
	81	Signal Status	---	---	---	---	4 bytes (INT32)	RO	---	---	---

9-15-14 463C hex: Monitor Input 5

Sets the Monitor Input 5 (MON5).

Index (hex)	Sub-index (hex)	Object name	Setting range	Unit	Default setting	Data attri-bute	Size	Access	PDO map	Complete access	Modes of operation
463C	---	Monitor Input 5	---	---	---	---	---	---	---	Possible	---
	00	Number of entries	---	---	81 hex	---	1 byte (U8)	RO	---	---	---
	01	Port Selection	0 to 8	---	0	R	4 bytes (INT32)	RW	---	---	---
	02	Logic Selection	0 to 1	---	0	R	4 bytes (INT32)	RW	---	---	---
	81	Signal Status	---	---	---	---	4 bytes (INT32)	RO	---	---	---

9-15-15 463D hex: Monitor Input 6

Sets the Monitor Input 6 (MON6).

Index (hex)	Sub-index (hex)	Object name	Setting range	Unit	Default setting	Data attri-bute	Size	Access	PDO map	Complete access	Modes of operation
463D	---	Monitor Input 6	---	---	---	---	---	---	---	Possible	---
	00	Number of entries	---	---	81 hex	---	1 byte (U8)	RO	---	---	---
	01	Port Selection	0 to 8	---	0	R	4 bytes (INT32)	RW	---	---	---
	02	Logic Selection	0 to 1	---	0	R	4 bytes (INT32)	RW	---	---	---
	81	Signal Status	---	---	---	---	4 bytes (INT32)	RO	---	---	---

9-15-16 463E hex: Monitor Input 7

Sets the Monitor Input 7 (MON7).

Index (hex)	Sub-index (hex)	Object name	Setting range	Unit	Default setting	Data attri-bute	Size	Access	PDO map	Complete access	Modes of operation
463E	---	Monitor Input 7	---	---	---	---	---	---	---	Possible	---
	00	Number of entries	---	---	81 hex	---	1 byte (U8)	RO	---	---	---
	01	Port Selection	0 to 8	---	0	R	4 bytes (INT32)	RW	---	---	---
	02	Logic Selection	0 to 1	---	0	R	4 bytes (INT32)	RW	---	---	---
	81	Signal Status	---	---	---	---	4 bytes (INT32)	RO	---	---	---

9-15-17 463F hex: Monitor Input 8

Sets the Monitor Input 8 (MON8).

Index (hex)	Sub-index (hex)	Object name	Setting range	Unit	Default setting	Data attri-bute	Size	Access	PDO map	Complete access	Modes of operation
463F	---	Monitor Input 8	---	---	---	---	---	---	---	Possible	---
	00	Number of entries	---	---	81 hex	---	1 byte (U8)	RO	---	---	---
	01	Port Selection	0 to 8	---	0	R	4 bytes (INT32)	RW	---	---	---
	02	Logic Selection	0 to 1	---	0	R	4 bytes (INT32)	RW	---	---	---
	81	Signal Status	---	---	---	---	4 bytes (INT32)	RO	---	---	---

9-16 General-purpose Output Setting Objects

These objects are used for the general-purpose output setting. Refer to *7-2 General-purpose Output Signals* on page 7-8 for details.

9-16-1 Setting

This section explains the contents of the general-purpose output setting. These setting items are common to all general-purpose outputs.

Subindex 01 hex: Port Selection

- Selects the port to be allocated.

● Description of Set Values

Set value		Description
Bit 0		General Output 1 (OUT1)
	0	Not allocated
	1	Allocated
Bit 1		General Output 2 (OUT2)
	0	Not allocated
	1	Allocated
Bit 2		General Output 3 (OUT3)
	0	Not allocated
	1	Allocated

Subindex 02 hex: Logic Selection

- Sets 0 (positive logic (NO contact)) or 1 (negative logic (NC contact)).

● Description of Set Values

Set value	Description
0	Positive logic (NO contact)
1	Negative logic (NC contact)

Subindex 81 hex: Signal Status

- Gives the signal status.

● Description of Set Values

Set value	Description
0	Inactive
1	Active

9-16-2 4650 hex: Error Output

Sets the Error Output (ERR).

Index (hex)	Sub-index (hex)	Object name	Setting range	Unit	Default setting	Data attri-bute	Size	Access	PDO map	Complete access	Modes of operation
4650	---	Error output	---	---	---	---	---	---	---	Possible	---
	00	Number of entries	---	---	81 hex	---	1 byte (U8)	RO	---	---	---
	01	Port Selection	0 to 7	---	0	R	4 bytes (INT32)	RW	---	---	---
	02	Logic Selection	---	---	1	R	4 bytes (INT32)	RW	---	---	---
	81	Signal Status	---	---	---	---	4 bytes (INT32)	RO	---	---	---

Note The Logic Selection is fixed to *1* (negative logic (NC contact)).

9-16-3 4651 hex: Servo Ready Output

Sets the Servo Ready Output (READY).

Index (hex)	Sub-index (hex)	Object name	Setting range	Unit	Default setting	Data attri-bute	Size	Access	PDO map	Complete access	Modes of opera-tion
4651	---	Servo Ready Output	---	---	---	---	---	---	---	Possible	---
	00	Number of entries	---	---	81 hex	---	1 byte (U8)	RO	---	---	---
	01	Port Selection	0 to 7	---	1	R	4 bytes (INT32)	RW	---	---	---
	02	Logic Selection	0 to 1	---	0	R	4 bytes (INT32)	RW	---	---	---
	81	Signal Status	---	---	---	---	4 bytes (INT32)	RO	---	---	---

9-16-4 4652 hex: Positioning Completion Output 1

Sets the Positioning Completion Output 1 (INP1).

Index (hex)	Sub-index (hex)	Object name	Setting range	Unit	Default setting	Data attri-bute	Size	Access	PDO map	Complete access	Modes of operation
4652	---	Positioning Com-pletion Output 1	---	---	---	---	---	---	---	Possible	---
	00	Number of entries	---	---	81 hex	---	1 byte (U8)	RO	---	---	---
	01	Port Selection	0 to 7	---	0	R	4 bytes (INT32)	RW	---	---	---
	02	Logic Selection	0 to 1	---	0	R	4 bytes (INT32)	RW	---	---	---
	81	Signal Status	---	---	---	---	4 bytes (INT32)	RO	---	---	---

9-16-5 4653 hex: Positioning Completion Output 2

Sets the Positioning Completion Output 2 (INP2).

Index (hex)	Sub-index (hex)	Object name	Setting range	Unit	Default setting	Data attri-bute	Size	Access	PDO map	Complete access	Modes of opera-tion
4653	---	Positioning Com-pletion Output 2	---	---	---	---	---	---	---	Possible	---
	00	Number of entries	---	---	81 hex	---	1 byte (U8)	RO	---	---	---
	01	Port Selection	0 to 7	---	0	R	4 bytes (INT32)	RW	---	---	---
	02	Logic Selection	0 to 1	---	0	R	4 bytes (INT32)	RW	---	---	---
	81	Signal Status	---	---	---	---	4 bytes (INT32)	RO	---	---	---

9-16-6 4654 hex: Velocity Attainment Detection Output

Sets the Velocity Attainment Detection Output (TGON).

Index (hex)	Sub-index (hex)	Object name	Setting range	Unit	Default setting	Data attri-bute	Size	Access	PDO map	Complete access	Modes of operation
4654	---	Velocity Attain-ment Detection Output	---	---	---	---	---	---	---	Possible	---
	00	Number of entries	---	---	81 hex	---	1 byte (U8)	RO	---	---	---
	01	Port Selection	0 to 7	---	0	R	4 bytes (INT32)	RW	---	---	---
	02	Logic Selection	0 to 1	---	0	R	4 bytes (INT32)	RW	---	---	---
	81	Signal Status	---	---	---	---	4 bytes (INT32)	RO	---	---	---

9-16-7 4655 hex: Torque Limit Output

Sets the Torque Limit Output (TLIMIT).

Index (hex)	Sub-index (hex)	Object name	Setting range	Unit	Default setting	Data attri-bute	Size	Access	PDO map	Complete access	Modes of opera-tion
4655	---	Torque Limit Out-put	---	---	---	---	---	---	---	Possible	---
	00	Number of entries	---	---	81 hex	---	1 byte (U8)	RO	---	---	---
	01	Port Selection	0 to 7	---	0	R	4 bytes (INT32)	RW	---	---	---
	02	Logic Selection	0 to 1	---	0	R	4 bytes (INT32)	RW	---	---	---
	81	Signal Status	---	---	---	---	4 bytes (INT32)	RO	---	---	---

9-16-8 4656 hex: Zero Speed Detection Output

Sets the Zero Speed Detection Output (ZSP).

Index (hex)	Sub-index (hex)	Object name	Setting range	Unit	Default setting	Data attri-bute	Size	Access	PDO map	Complete access	Modes of operation
4656	---	Zero Speed Detection Output	---	---	---	---	---	---	---	Possible	---
	00	Number of entries	---	---	81 hex	---	1 byte (U8)	RO	---	---	---
	01	Port Selection	0 to 7	---	0	R	4 bytes (INT32)	RW	---	---	---
	02	Logic Selection	0 to 1	---	0	R	4 bytes (INT32)	RW	---	---	---
	81	Signal Status	---	---	---	---	4 bytes (INT32)	RO	---	---	---

9-16-9 4657 hex: Velocity Conformity Output

Sets the Velocity Conformity Output (VCMP).

Index (hex)	Sub-index (hex)	Object name	Setting range	Unit	Default setting	Data attri-bute	Size	Access	PDO map	Complete access	Modes of opera-tion
4657	---	Velocity Confor-mity Output	---	---	---	---	---	---	---	Possible	---
	00	Number of entries	---	---	81 hex	---	1 byte (U8)	RO	---	---	---
	01	Port Selection	0 to 7	---	0	R	4 bytes (INT32)	RW	---	---	---
	02	Logic Selection	0 to 1	---	0	R	4 bytes (INT32)	RW	---	---	---
	81	Signal Status	---	---	---	---	4 bytes (INT32)	RO	---	---	---

9-16-10 4658 hex: Warning Output 1

Sets the Warning Output 1 (WARN1).

Index (hex)	Sub-index (hex)	Object name	Setting range	Unit	Default setting	Data attri-bute	Size	Access	PDO map	Complete access	Modes of operation
4658	---	Warning Output 1	---	---	---	---	---	---	---	Possible	---
	00	Number of entries	---	---	81 hex	---	1 byte (U8)	RO	---	---	---
	01	Port Selection	0 to 7	---	0	R	4 bytes (INT32)	RW	---	---	---
	02	Logic Selection	0 to 1	---	0	R	4 bytes (INT32)	RW	---	---	---
	81	Signal Status	---	---	---	---	4 bytes (INT32)	RO	---	---	---

9-16-11 4659 hex: Warning Output 2

Sets the Warning Output 2 (WARN2).

Index (hex)	Sub-index (hex)	Object name	Setting range	Unit	Default setting	Data attri-bute	Size	Access	PDO map	Complete access	Modes of opera-tion
4659	---	Warning Output 2	---	---	---	---	---	---	---	Possible	---
	00	Number of entries	---	---	81 hex	---	1 byte (U8)	RO	---	---	---
	01	Port Selection	0 to 7	---	0	R	4 bytes (INT32)	RW	---	---	---
	02	Logic Selection	0 to 1	---	0	R	4 bytes (INT32)	RW	---	---	---
	81	Signal Status	---	---	---	---	4 bytes (INT32)	RO	---	---	---

9-16-12 465A hex: Velocity Limiting Output

Sets the Velocity Limiting Output (VLIMIT).

Index (hex)	Sub-index (hex)	Object name	Setting range	Unit	Default setting	Data attri-bute	Size	Access	PDO map	Complete access	Modes of opera-tion
465A	---	Velocity Limiting Output	---	---	---	---	---	---	---	Possible	---
	00	Number of entries	---	---	81 hex	---	1 byte (U8)	RO	---	---	---
	01	Port Selection	0 to 7	---	0	R	4 bytes (INT32)	RW	---	---	---
	02	Logic Selection	0 to 1	---	0	R	4 bytes (INT32)	RW	---	---	---
	81	Signal Status	---	---	---	---	4 bytes (INT32)	RO	---	---	---

9-16-13 465B hex: Error Clear Attribute Output

Sets the Error Clear Attribute Output (ERR-ATB).

Index (hex)	Sub-index (hex)	Object name	Setting range	Unit	Default setting	Data attri-bute	Size	Access	PDO map	Complete access	Modes of opera-tion
465B	---	Error Clear Attri-bute Output	---	---	---	---	---	---	---	Possible	---
	00	Number of entries	---	---	81 hex	---	1 byte (U8)	RO	---	---	---
	01	Port Selection	0 to 7	---	0	R	4 bytes (INT32)	RW	---	---	---
	02	Logic Selection	0 to 1	---	0	R	4 bytes (INT32)	RW	---	---	---
	81	Signal Status	---	---	---	---	4 bytes (INT32)	RO	---	---	---

9-16-14 465C hex: Remote Output 1

Sets the Remote Output 1 (R-OUT1).

Index (hex)	Sub-index (hex)	Object name	Setting range	Unit	Default setting	Data attri-bute	Size	Access	PDO map	Complete access	Modes of operation
465C	---	Remote Output 1	---	---	---	---	---	---	---	Possible	---
	00	Number of entries	---	---	81 hex	---	1 byte (U8)	RO	---	---	---
	01	Port Selection	0 to 7	---	2	R	4 bytes (INT32)	RW	---	---	---
	02	Logic Selection	0 to 1	---	0	R	4 bytes (INT32)	RW	---	---	---
	81	Signal Status	---	---	---	---	4 bytes (INT32)	RO	---	---	---

9-16-15 465D hex: Remote Output 2

Sets the Remote Output 2 (R-OUT2).

Index (hex)	Sub-index (hex)	Object name	Setting range	Unit	Default setting	Data attri-bute	Size	Access	PDO map	Complete access	Modes of opera-tion
465D	---	Remote Output 2	---	---	---	---	---	---	---	Possible	---
	00	Number of entries	---	---	81 hex	---	1 byte (U8)	RO	---	---	---
	01	Port Selection	0 to 7	---	4	R	4 bytes (INT32)	RW	---	---	---
	02	Logic Selection	0 to 1	---	0	R	4 bytes (INT32)	RW	---	---	---
	81	Signal Status	---	---	---	---	4 bytes (INT32)	RO	---	---	---

9-16-16 465E hex: Remote Output 3

Sets the Remote Output 3 (R-OUT3).

Index (hex)	Sub-index (hex)	Object name	Setting range	Unit	Default setting	Data attri-bute	Size	Access	PDO map	Complete access	Modes of operation
465E	---	Remote Output 3	---	---	---	---	---	---	---	Possible	---
	00	Number of entries	---	---	81 hex	---	1 byte (U8)	RO	---	---	---
	01	Port Selection	0 to 7	---	0	R	4 bytes (INT32)	RW	---	---	---
	02	Logic Selection	0 to 1	---	0	R	4 bytes (INT32)	RW	---	---	---
	81	Signal Status	---	---	---	---	4 bytes (INT32)	RO	---	---	---

9-16-17 465F hex: Zone Notification Output 1

Sets the Zone Notification Output 1 (ZONE1).

Index (hex)	Sub-index (hex)	Object name	Setting range	Unit	Default setting	Data attri-bute	Size	Access	PDO map	Complete access	Modes of operation
465F	---	Zone Notification Output 1	---	---	---	---	---	---	---	Possible	---
	00	Number of entries	---	---	81 hex	---	1 byte (U8)	RO	---	---	---
	01	Port Selection	0 to 7	---	0	R	4 bytes (INT32)	RW	---	---	---
	02	Logic Selection	0 to 1	---	0	R	4 bytes (INT32)	RW	---	---	---
	81	Signal Status	---	---	---	---	4 bytes (INT32)	RO	---	---	---

9-16-18 4660 hex: Zone Notification Output 2

Sets the Zone Notification Output 2 (ZONE2).

Index (hex)	Sub-index (hex)	Object name	Setting range	Unit	Default setting	Data attri-bute	Size	Access	PDO map	Complete access	Modes of operation
4660	---	Zone Notification Output 2	---	---	---	---	---	---	---	Possible	---
	00	Number of entries	---	---	81 hex	---	1 byte (U8)	RO	---	---	---
	01	Port Selection	0 to 7	---	0	R	4 bytes (INT32)	RW	---	---	---
	02	Logic Selection	0 to 1	---	0	R	4 bytes (INT32)	RW	---	---	---
	81	Signal Status	---	---	---	---	4 bytes (INT32)	RO	---	---	---

9-16-19 4661 hex: Position Command Status Output

Sets the Position Command Status Output (PCMD).

Index (hex)	Sub-index (hex)	Object name	Setting range	Unit	Default setting	Data attri-bute	Size	Access	PDO map	Complete access	Modes of operation
4661	---	Position Com-mand Status Out-put	---	---	---	---	---	---	---	Possible	---
	00	Number of entries	---	---	81 hex	---	1 byte (U8)	RO	---	---	---
	01	Port Selection	0 to 7	---	0	R	4 bytes (INT32)	RW	---	---	---
	02	Logic Selection	0 to 1	---	0	R	4 bytes (INT32)	RW	---	---	---
	81	Signal Status	---	---	---	---	4 bytes (INT32)	RO	---	---	---

9-16-20 4662 hex: Distribution Completed Output

Sets the Distribution Completed Output (DEN).

Index (hex)	Sub-index (hex)	Object name	Setting range	Unit	Default setting	Data attri-bute	Size	Access	PDO map	Complete access	Modes of operation
4662	---	Distribution Com-pleted Output	---	---	---	---	---	---	---	Possible	---
	00	Number of entries	---	---	81 hex	---	1 byte (U8)	RO	---	---	---
	01	Port Selection	0 to 7	---	0	R	4 bytes (INT32)	RW	---	---	---
	02	Logic Selection	0 to 1	---	0	R	4 bytes (INT32)	RW	---	---	---
	81	Signal Status	---	---	---	---	4 bytes (INT32)	RO	---	---	---

9-16-21 4663 hex: External Brake Interlock Output

Sets the External Brake Interlock Output (EXTBKIR).

Index (hex)	Sub-index (hex)	Object name	Setting range	Unit	Default setting	Data attri-bute	Size	Access	PDO map	Complete access	Modes of operation
4663	---	External Brake Interlock Output	---	---	---	---	---	---	---	Possible	---
	00	Number of entries	---	---	81 hex	---	1 byte (U8)	RO	---	---	---
	01	Port Selection	00000000 to FFFFFFFF hex	---	0	R	4 bytes (INT32)	RW	---	---	---
	02	Logic Selection	0	---	0	R	4 bytes (INT32)	RW	---	---	---
	81	Signal Status	---	---	---	---	4 bytes (INT32)	RO	---	---	---

Subindex 01 hex: Port Selection

- Selects the output port to be assigned.
- Select ports to be assigned. If any ports are NOT assigned, the ports are output to brake output (BKIR).

Description of Set Values

Set value		Description
Bit 0		General Output 1 (OUT1)
	0	Not allocated
	1	Allocated
Bit 1		General Output 2 (OUT2)
	0	Not allocated
	1	Allocated
Bit 2		General Output 3 (OUT3)
	0	Not allocated
	1	Allocated
Bit 31		SBC Output
	0	Not allocated
	1	Allocated

9-17 Safety Related Object

You set the safety related object.

9-17-1 4F00 hex: Safety Origin Position Setting

Sets the Safety Origin Position detection.

These objects are for SRA parameters.

Index (hex)	Sub-index (hex)	Object name	Setting range	Unit	Default setting	Data attri-bute	Size	Access	PDO map	Complete access	Modes of operation
4F00	---	Safety Origin Position Setting	---	---	---	---	---	---	---	Possible	---
	00	Number of entries	---	---	06 hex	---	1 byte (U8)	RO	---	---	---
	01	Safety Origin Position Determi-nation Method	0 to 2	---	0	S	1 byte (U8)	W	---	---	---
	02	Test Pulse Diag-nosis	0 to 3	---	3	S	1 byte (U8)	W	---	---	---
	03	SOPT input ter-minal setting	0 to 3	---	3	S	1 byte (U8)	W	---	---	---
	04	Safety Origin Position Offset	0 to 1,048,575	Encoder unit	0	S	4 bytes (U32)	W	---	---	---
	05	Discrepancy Dis-tance	-1 to 2,147,483 ,647	Encoder unit	-1	S	4 bytes (U32)	W	---	---	---
	06	Safety Origin Position Toler-ance	128 to 2,147,483 ,647	Encoder unit	10,484	S	4 bytes (U32)	W	---	---	---

Subindex 01 hex: Safety Origin Position Determination Method

- Selects the determination method of Safety Origin Position.

● Description of Set Values

Set value	Description	
0	SOPT1 and SOPT2 Input	Use two SOPT Input Devices (sensor or switch) to deter-mine safety origin position. Set the middle position between the installation positions of these devices as a Safety Origin Position.
1*1	[Only specified operation] Safety Origin Position Offset	Set data to **Safety Origin Position Offset** (4F00-04 hex) becomes Safety Origin Position. Set any of position in motor one-rotation.
2*1	[Only specified operation] Safety Origin Position Offset and SOPT1 Input	Set the installation position of SOPT1 input device to **Safety Origin Position Offset** (4F00-04 hex) to fix the safety origin position. Set any of position in motor one rotation.

*1. This setting can be used only for when the motor does not rotate a full rotation.

Subindex 02 hex: Test Pulse Diagnosis

- Set the test pulse diagnosis whether or not the test pulse is output from test output ports at certain intervals.

● Description of Set Values

Set value	Description
0	Test pulse diagnosis of TO1 output is not enable Test pulse diagnosis of TO2 output is not enable
1	Test pulse diagnosis of TO1 output is enable Test pulse diagnosis of TO2 output is not enable
2	Test pulse diagnosis of TO1 output is not enable Test pulse diagnosis of TO2 output is enable
3	Test pulse diagnosis of TO1 output is enable Test pulse diagnosis of TO2 output is enable

Subindex 03 hex: SOPT Input Terminal Setting

- Set the logic of the input device connected to the SOPT input terminal.

● Description of Set Values

Set value	Description
0	SOPT1 input: Positive logic SOPT2 input: Positive logic
1	SOPT1 input: Negative logic SOPT2 input: Positive logic
2	SOPT1 input: Positive logic SOPT2 input: Negative logic
3	SOPT1 input: Negative logic SOPT2 input: Negative logic

Subindex 04 hex: Safety Origin Position Offset

- Set the encoder origin position and the Safety Origin Position Offset in units of encoder.
- This data is required when **Safety Origin Position Determination Method** (4F00-01 hex) is set to *1* [Only specified operation] Safety Origin Position Offset or *2* [Only specified operation] Safety Origin Position Offset and SOPT1 Input.

Subindex 05 hex: Discrepancy Distance

- Set a distance of the installation position between SOPT1 Input Device and SOPT2 Input Device.
- This setting is required when **Safety Origin Position Determination Method** (4F00-01 hex) is set to *0* (SOPT1 and SOPT2 Input).
- The default setting is *-1*. You can measure the dual channel monitoring distance. The measured distance can be measured by **Discrepancy Distance Monitor** (4F02-82 hex). Setting value of -1 cannot determine Safety Origin Position. Be sure to set a distance of a dual channel monitoring.

Subindex 06 hex: Safety Origin Position Tolerance

- Sets the Tolerance Value of SOPT 1/2. Set the total tolerance value including mechanical devices.

9-17-2 4F01 hex: Safety Position/Velocity Validation Monitoring Function

Sets the safety position/velocity validation monitoring function.

These objects are for SRA parameters.

Index (hex)	Sub-index (hex)	Object name	Setting range	Unit	Default setting	Data attribute	Size	Access	PDO map	Complete access	Modes of operation
4F01	---	Safety Position/ Velocity Validation	---	---	---	---	---	---	---	Possible	---
	00	Number of entries	---	---	03 hex	---	1 byte (U8)	RO	---	---	---
	01	Function Enable	0 to 1	---	1	S	1 byte (U8)	W	---	---	---
	02	Position Tolerance	128 to 131,072	Encoder unit	58,254	S	4 bytes (U32)	W	---	---	---
	03	Velocity Tolerance	4 to 250	r/min	50	S	4 bytes (U32)	W	---	---	---

Subindex 01 hex: Function Enable

- Selects to enable or disable the Safety Position/Velocity Validation Monitoring Function.

● Description of Set Values

Set value	Description
0	Disable
1	Enable

Subindex 02 hex: Position Tolerance

- Sets the Tolerance Value of the Position Validation Monitoring.
- Set a multiple number of 128 to the setting value of the tolerance. If you set other numbers, the setting value is automatically corrected to a multiple number of 128 which does not exceed the setting value for the operation. For example, when the setting value is between 256 and 383, 256 is automatically set to the setting value.

Subindex 03 hex: Velocity Tolerance

- Sets the Tolerance Value of the Velocity Validation Monitoring.

9-17-3 4F02 hex: Discrepancy Distance Measurement

It is an object for measuring discrepancy distances monitoring.

Index (hex)	Sub-index (hex)	Object name	Setting range	Unit	Default setting	Data attri-bute	Size	Access	PDO map	Complete access	Modes of operation
4F02	---	Discrepancy Distance Measurement	---	---	---	---	---	---	---	Possible	---
	00	Number of entries	---	---	FF hex	---	1 byte (U8)	RO	---	---	---
	81	Status	---	---	---	---	4 bytes (INT32)	RO	---	---	---
	82	Discrepancy Distance Monitor	---	Encoder unit	---	---	4 bytes (U32)	RO	---	---	---
	83	SOPT Intermediate Position Determination Status	---	---	---	---	4 bytes (INT32)	RO	---	---	---
	F1	Re-measurement of Discrepancy Distance Monitoring	0 to 1	---	0	A	4 bytes (U32)	W	---	---	---
	FF	Execution Status	---	---	---	---	4 bytes (INT32)	RO	---	---	---

Subindex 81 hex: Status

- Gives the status of discrepancy distance monitoring. Refer to the Discrepancy Distance Monitor When measurement is completed.

● Description of Set Values

Set value	Description
0	Not measured or measurement completed.
1	During measurement.

Subindex 82 hex: Discrepancy Distance Monitor

- Gives the value to be set for the Discrepancy Distance Monitoring. When the status is measuring, gives the last value.

Subindex 83 hex: SOPT Intermediate Position Determination Status

- Gives the determination status of the intermediate position of the SOPT input. It is used as trouble-shooting when determination of the safety origin position or measuring the discrepancy distance monitoring is not completed.

● Description of Set Values

Set value		Description
bit 0		SOPT1 Intermediate Position Determination Status
	0	Not determined
	1	Determined
bit 1		SOPT2 Intermediate Position Determination Status
	0	Not determined
	1	Determined

Subindex F1 hex: Re-measurement of Discrepancy Distance

- The discrepancy distance monitoring can be measured again. Re-measurement is executed by the writing of 1 to this object.

Subindex FF hex: Execution Status

- Gives the execution status of **Re-measurement of the discrepancy distance monitoring**.

● Description of Set Values

Set value	Description
0	Not executed or execution completed.
1	During execution

9-17-4 4F03 hex: Safety Motor Rotation Direction Selection

Selects the safety motor rotation direction to the command.

This object is for SRA parameters.

Index (hex)	Sub-index (hex)	Object name	Setting range	Unit	Default setting	Data attri-bute	Size	Access	PDO map	Complete access	Modes of operation
4F03	00	Safety Motor Rotation Direc-tion Selection	0 to 1	---	1	S	4 bytes (INT32)	W	---	Not possi-ble	---

● Description of Set Values

Set value	Description
0	The motor rotates in clockwise direction after a Servo Drive receives positive direction com-mand.
1	The motor rotates in counter clockwise direction after a Servo Drive receives positive direc-tion command.

- Motor's rotation direction: CW and CCW mean the clockwise and counterclockwise direction respec-tively as viewed from the load-side shaft.

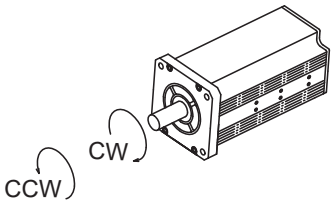

9-17-5 4F08 hex: Safety Relay Activate

Selects whether to use safety relay.

This object is for SRA parameters.

Index (hex)	Sub-index (hex)	Object name	Setting range	Unit	Default setting	Data attri-bute	Size	Access	PDO map	Complete access	Modes of operation
4F08	00	Safety Relay Activate	0 to 1	---	0	S	4 bytes (INT32)	W	---	Not possi-ble	---

● Description of Set Values

Set value	Description
0	Deactivate (Not Use)
1	Activate (Use)

9-17-6 4F09 hex: Safety Relay OFF Delay Time 1

Set the delay time until a safety relay output is turned OFF after SBC 2 output is turned OFF.

This object is for SRA parameters.

Set an even number to the delay time. When a setting value is an odd number, the function is activated as the value +1.

Index (hex)	Sub-index (hex)	Object name	Setting range	Unit	Default setting	Data attri-bute	Size	Access	PDO map	Complete access	Modes of operation
4F09	00	Safety Relay OFF Delay Time 1	0 to 1,000	ms	30	S	2 bytes (U16)	W	---	Possible	---

9-17-7 4F0A hex: Safety Relay OFF Delay Time 2

Set the delay time until a safety relay output is turned OFF after SBC 1 output is turned OFF.

This object is for SRA parameters.

Set an even number to the delay time. When a setting value is an odd number, the function is activated as the value +1.

Index (hex)	Sub-index (hex)	Object name	Setting range	Unit	Default setting	Data attri-bute	Size	Access	PDO map	Complete access	Modes of operation
4F0A	00	Safety Relay OFF Delay Time 2	0 to 1,000	ms	30	S	2 bytes (U16)	W	---	Possible	---

9-17-8 4F16 hex: Error Detection Activate In SLS Deactivate

You set existence/non-existence of error detection by safety function to Reset SLS command.

This object is for SRA parameters.

Index (hex)	Sub-index (hex)	Object name	Setting range	Unit	Default setting	Data attri-bute	Size	Access	PDO map	Complete access	Modes of operation
4F16	---	Error Detection Activate In SLS Deactivate	---	---	---	---	---	---	---	Possible	---
	00	Number of entries	---	---	8	---	1 byte (U8)	RO	---	---	---
	01	Error Detection Activate In SLS Deactivate (SLS 1)	0 to 1	---	1	S	4 bytes (INT32)	W	---	---	---
	02	Error Detection Activate In SLS Deactivate (SLS 2)	0 to 1	---	1	S	4 bytes (INT32)	W	---	---	---
	03	Error Detection Activate In SLS Deactivate (SLS 3)	0 to 1	---	1	S	4 bytes (INT32)	W	---	---	---
	04	Error Detection Activate In SLS Deactivate (SLS 4)	0 to 1	---	1	S	4 bytes (INT32)	W	---	---	---
	05	Error Detection Activate In SLS Deactivate (SLS 5)	0 to 1	---	1	S	4 bytes (INT32)	W	---	---	---
	06	Error Detection Activate In SLS Deactivate (SLS 6)	0 to 1	---	1	S	4 bytes (INT32)	W	---	---	---
	07	Error Detection Activate In SLS Deactivate (SLS 7)	0 to 1	---	1	S	4 bytes (INT32)	W	---	---	---
	08	Error Detection Activate In SLS Deactivate (SLS 8)	0 to 1	---	1	S	4 bytes (INT32)	W	---	---	---

Subindex 01 to 08 hex: Error Detection Activate in SLS Deactivate

- Set existence/non-existence of error detection for safety function to **SLS command 1** to **SLS command 8**.

● Description of Set Values

Set value	Description
0	Deactivate
1	Activate

9-17-9 4F18 hex: Safety Present Pulse Position

Indicates the present safety pulse position.

The value of 0 is displayed until FSoE communication is established.

Index (hex)	Sub-index (hex)	Object name	Setting range	Unit	Default setting	Data attri-bute	Size	Access	PDO map	Complete access	Modes of operation
4F18	00	Safety present pulse position	---	Encoder unit	0	---	4 bytes (INT32)	RO	TxPDO	Not possi-ble	---

9-17-10 4F19 hex: Safety Present Position

Indicates the position information based on the safety origin position. It is used by the SLP function.

The value of 0 is displayed until FSoE communication is established.

Index (hex)	Sub-index (hex)	Object name	Setting range	Unit	Default setting	Data attri-bute	Size	Access	PDO map	Complete access	Modes of operation
4F19	00	Safety Present Position	---	Encoder unit	0	---	4 bytes (INT32)	RO	TxPDO	Not possi-ble	---

9-17-11 4F1A hex: Safety Present Motor Velocity

Indicates the present safety motor velocity.

The value of 0 is displayed until FSoE communication is established.

Safety Present Motor Velocity may be displayed about 7% larger than **Present Motor Velocity** (3221-82 hex). Consider this when setting the monitoring range.

Index (hex)	Sub-index (hex)	Object name	Setting range	Unit	Default setting	Data attri-bute	Size	Access	PDO map	Complete access	Modes of operation
4F1A	00	Safety Present Motor Velocity	---	0.1 r/min	0	---	4 bytes (INT32)	RO	TxPDO	Not possi-ble	---

9-17-12 4F20 hex: Safety Function Disable Setting

Disable the Safety Function which are allocated in Safety PDO.

This object is for SRA parameters.

Index (hex)	Sub-index (hex)	Object name	Setting range	Unit	Default setting	Data attri-bute	Size	Access	PDO map	Complete access	Modes of operation
4F20	---	Safety Function disable Setting	---	---	---	---	---	---	---	Possible	---
	00	Number of entries	---	---	01 hex	---	1 byte (U8)	RO	---	---	---
	01	1st Byte Disable Setting	0 to 110	---	0	S	2 bytes (U16)	W	---	---	---

Subindex 01 hex: 1st Byte Disable Setting

- Disable the Safety Function which are allocated in Safety PDO 1st Byte. To inactivate the safety function, set *1* to the corresponding bit.

● Description of Set Values

Set value		Description
bit 0		Reserved Always set to 0.
bit 1		SS1 command 1
	0	Enabled
	1	Disabled
bit 2		SS2 command 1
	0	Enabled
	1	Disabled
bit 3		SOS command 1
	0	Enabled
	1	Disabled
bit 4		Reserved Always set to 0.
bit 5		SDI positive direction command
	0	Enabled
	1	Disabled
bit 6		SDI negative direction command
	0	Enabled
	1	Disabled
bit 7		Reserved Always set to 0.

10

Operation

This section provides the operational procedure and explains how to operate in each mode.

10-1 Operational Procedure 10-2

10-2 Preparing for Operation 10-3

10-2-1 Items to Check Before Turning ON the Power Supply 10-3

10-2-2 Turning ON the Power Supply 10-4

10-2-3 Checking the Displays 10-5

10-2-4 Absolute Encoder Setup 10-7

10-2-5 Setting Up an Absolute Encoder from the Sysmac Studio 10-7

10-3 Test Run 10-8

10-3-1 Preparations for Test Run 10-8

10-3-2 Test Run via USB Communications from the Sysmac Studio 10-9

10-4 Confirmation of Safety Functions 10-10

10-4-1 Preparation Before Confirmation of Safety Function 10-10

10-4-2 Confirmation of Safety Function 10-10

10-1 Operational Procedure

Perform installation and wiring correctly, and turn ON the power supply to check the operation of the individual Servomotor and Servo Drive.

Then make the function settings as required according to the use of the Servomotor and Servo Drive.

If the objects are set incorrectly, there is a risk of unexpected motor operation, which can be dangerous. Set the objects accurately according to the setting methods in this manual.

Item	Description	Reference
Installation and mounting	Install the Servomotor and Servo Drive according to the installation conditions. Do not connect the Servomotor to mechanical systems before checking the operation without any load.	Section 4, 4-1
↓		
Wiring and connections	Connect the Servomotor and Servo Drive to the power supply and peripheral equipment. Satisfy specified installation and wiring conditions, particularly for models that conforms to the EU Directives.	Section 4, 4-2
↓		
Preparing for operation	Check the necessary items and then turn ON the commercial power supply. Check on the display to see whether there are any internal errors in the Servo Drive.	Section 10, 10-2
↓		
Function settings	Set the objects related to the functions required for application conditions.	Section 9
↓		
Test run	First, check motor operation without any load. Then turn the power supply OFF and connect the Servomotor to mechanical systems. When you use a Servomotor with an absolute encoder, set up the absolute encoder. Execute the Unit Restart or cycle the power supply, and check to see whether protective functions, such as the immediate stop and operational limits, operate properly. Check operation at both low speed and high speed using the system without a workpiece, or with dummy workpieces.	Section 10, 10-3
↓		
Adjustment	Manually adjust the set values of objects such as gain if necessary.	Section 11
↓		
Operation	Operation can now be started. If any problems should occur, refer to *Section 12 Troubleshooting*. And then, confirm that the displayed present position is appropriate when the power supply is turned ON.	Section 12

10-2 Preparing for Operation

This section explains the procedure that you perform to prepare the system for operation after installation and wiring of the Servomotor and Servo Drive are completed. It explains items to check both before and after turning ON the power supply.

It also explains the setup procedure required if you use a Servomotor with an absolute encoder.

10-2-1 Items to Check Before Turning ON the Power Supply

Checking Power Supply Voltage

Check to be sure that the power supply voltage is within the ranges shown below.

Model	Main circuit power supply	Control circuit power supply
R88D-1SAN02H-ECT/-1SAN04H-ECT/-1SAN08H-ECT/-1SAN15H-ECT (Single-phase/3-phase 200-VAC input)	Single-phase/ 3-phase 200 to 240 VAC (170 to 252 V) 50/60 Hz	24 VDC (21.6 to 26.4 V)
R88D-1SAN10H-ECT/-1SAN20H-ECT/-1SAN30H-ECT (3-phase 200-VAC input)	3-phase 200 to 240 VAC (170 to 252 V) 50/60 Hz	24 VDC (21.6 to 26.4 V)
R88D-1SAN10F-ECT/-1SAN15F-ECT/-1SAN20F-ECT/-1SAN30F-ECT (3-phase 400-VAC input)	3-phase 380 to 480 VAC (323 to 504 V) 50/60 Hz	24 VDC (21.6 to 26.4 V)

Checking Terminal Block Wiring

- The main circuit power supply inputs (L1/L2/L3) must be properly connected to the terminal block.
- The control circuit power supply inputs (24V, ∅ or +24V, 0V) must be properly connected to the terminal block.
- The motor's red (U), write (V), and blue (W) power lines and the green (⏚) must be properly connected to the terminal block.

Checking the Servomotor

- There should be no load on the Servomotor. Do not connect mechanical systems.
- An integrated cable (power, brake and encoder integrated type cable) must be securely connected to the Servomotor.

Checking the Encoder Wiring

- The encoder cable must be securely connected to the encoder connector (CN2) at the Servo Drive.

Checking the EtherCAT Communications Connectors

Do not connect the EtherCAT Communications Cables to the EtherCAT Communications Connectors (ECAT IN and ECAT OUT).

Checking the Node Address Setting

Make sure that the node address is correctly set on the ID switches.

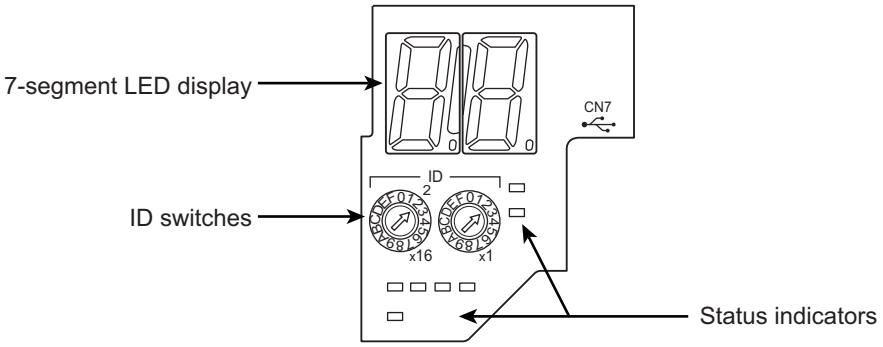

ID switch setting	Description
	Connection to NJ/NX-series CPU Unit, NY-series IPC Machine Controller or Position Control Unit (Model: CJ1W-NC□8□)
00	The controller sets the node address.
01 to FF	The ID switches set the node address.

Precautions for Correct Use

The ID switch setting is read only once when the Unit power supply is turned ON. Although the setting is changed after the Unit power supply is ON, it is not reflected in the control. It is enabled the next time the Unit power supply is turned ON.

10-2-2 Turning ON the Power Supply

Turn ON the control circuit power after you finish the checks which you must conduct before turning ON the power supply. You can turn ON the main circuit power, but it is not a required.

10-2-3 Checking the Displays

7-segment LED Display

The following figure shows the 7-segment LED display located on the front panel.

When the power is turned ON, it shows the node address that is set by the ID switches. Then the display changes according to the setting of the **LED Display Selection** (4210-01 hex).

An error code is displayed if an error occurs. A warning code is displayed if a warning occurs.

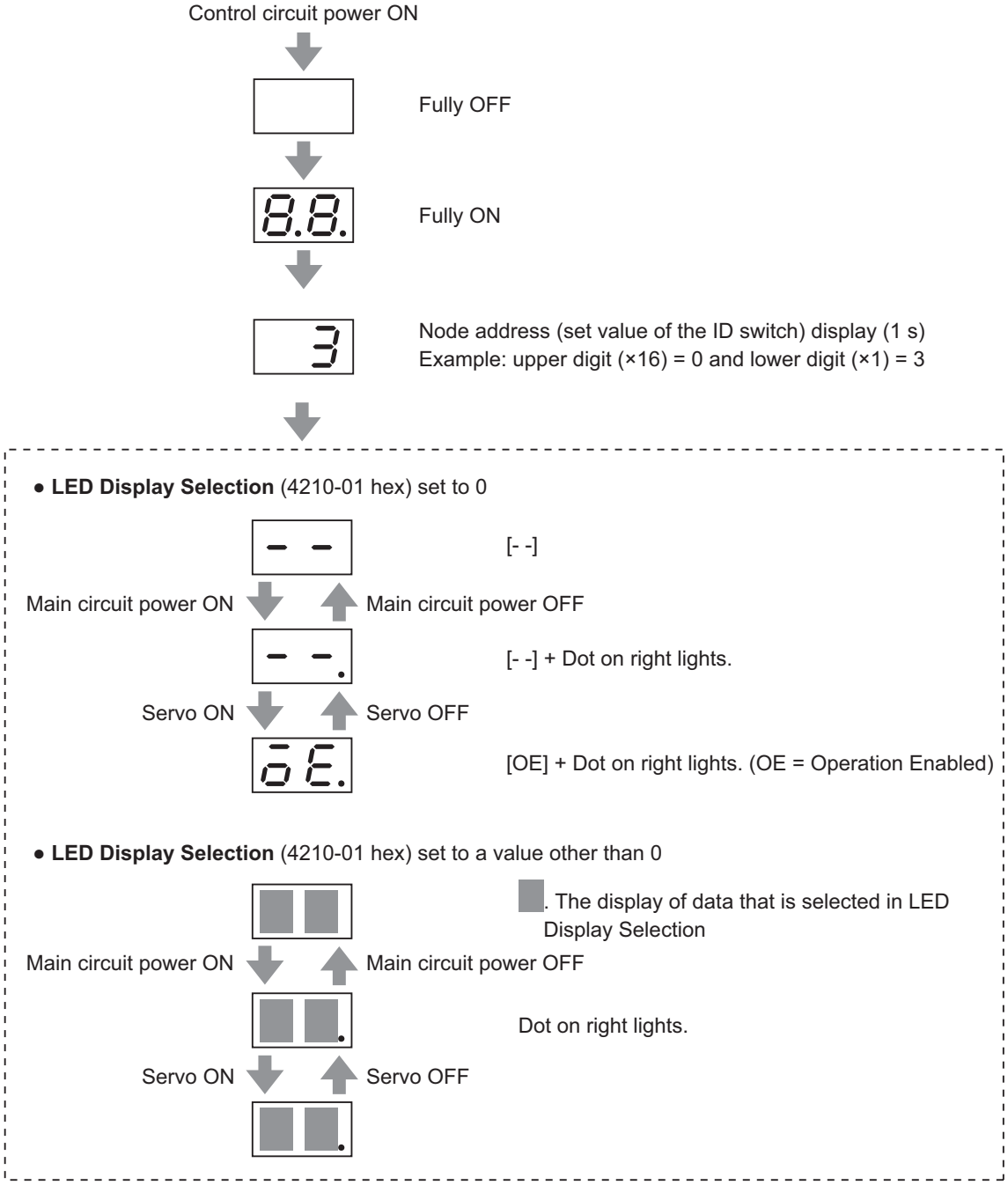

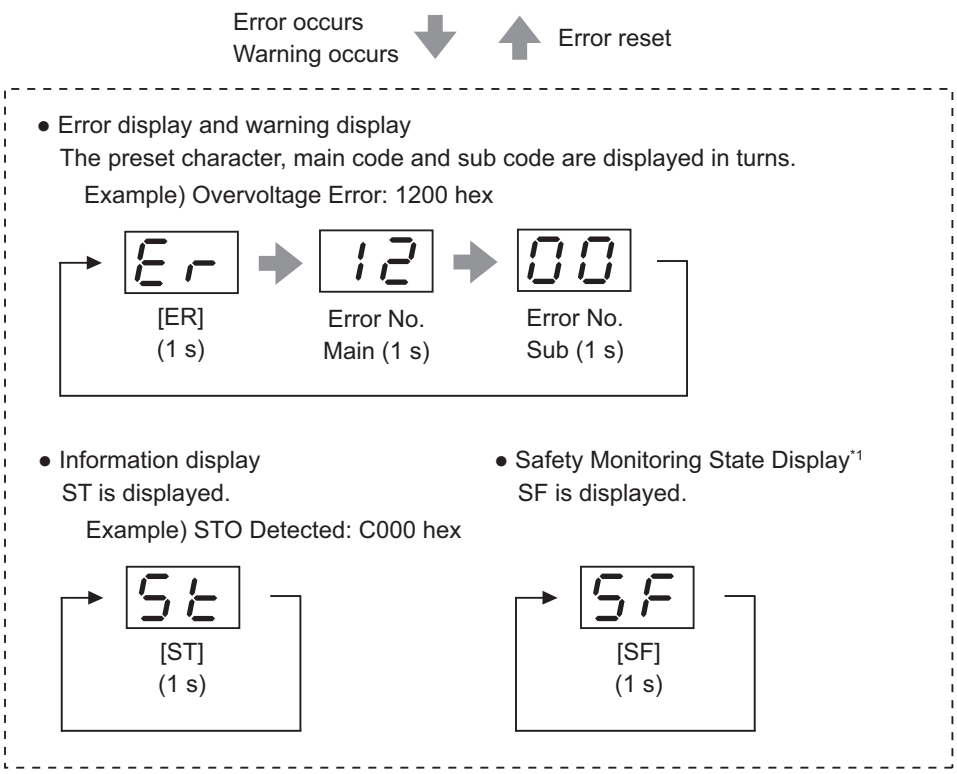

*1. It is displayed by safety functions (SOS, SLS, SLP and SDI) while a Servo Drive is monitoring positions and velocity. Refer to *Section 8 Safety Function*.

The node address is displayed as follows.

Node address	Expression	Display example
0 to 255	Expressed as 2-digit hexadecimal numbers from “0” to “FF”.	1 (1) FF (255 (FF hex))
256 to 511	The dot of the indicator is lit. The address is expressed as numbers from “.0” to “F.F”.	.0 (256 (100 hex)) F.F (511 (1FF hex))
512 or more	Expressed as “0.0”.	0.0 (512 or more)

Numbers from 0 to F hex are displayed as follows.

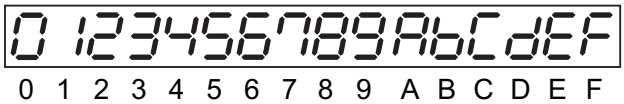

EtherCAT Status Indicators

Check the status of the status indicators.

If the RUN indicator does not turn ON or the ERR indicator does not turn OFF, refer to *5-1-2 Status Indicators* on page 5-3 and check the status.

10-2-4 Absolute Encoder Setup ABS

You must set up the absolute encoder if you use a motor with an absolute encoder. The setup is required when you turn ON the power supply for the first time.

When you use an absolute encoder, set the **Encoder – Operation Selection when Using Absolute Encoder** (4510-01 hex). Set this object to *0* or *2* (default setting) when you use the encoder as the absolute encoder.

Additional Information

Set this object to *1* when you use the encoder as the incremental encoder.

Set up the absolute encoder while the Servo is OFF.

Be sure to execute the Unit Restart or cycle the power supply after you finish the setup.

For information on setup using the Sysmac Studio, refer to the *Sysmac Studio Drive Functions Operation Manual* (Cat. No. I589) and *Setting Up an Absolute Encoder from the Sysmac Studio* described below.

10-2-5 Setting Up an Absolute Encoder from the Sysmac Studio

1. Start the Sysmac Studio and go online with the Servo Drive via EtherCAT or USB communications.
2. In the Sysmac Studio, right-click the target Servo Drive under **Configurations and Setup**, and select **Motor and Encoder**.
3. Click the **Clear system** button in the **Encoder Properties** pane.

   An Absolute Value Cleared (Error No. 27.01) error will occur after execution is completed.
4. Execute the Unit Restart or turn the control power supply to the Servo Drive OFF and then ON again.

10-3 Test Run

When you finished installation, wiring, and switch settings, and confirmed that the status was normal after turning ON the power supply, perform test run. The main purpose of test run is to confirm that the servo system operation is electrically correct.

If an error occurs during test run, refer to *Section 12 Troubleshooting* and eliminate the cause. Then check for safety, and retry test run.

10-3-1 Preparations for Test Run

Inspections Before Test Run

Check the following items.

● Wiring

- Make sure that there are no wiring errors (especially for the power supply input and motor output).
- Make sure that there are no short circuits. (Check the ground for short circuits as well.)
- Make sure that there are no loose connections.
- Make sure that the EtherCAT cable is pulled out.

● Power Supply and Voltage

- Make sure that the power voltage is within the specified range.
- Make sure that there is no voltage fluctuation.

● Servomotor Installation

- Make sure that the Servomotor is securely installed.

● Disconnection from Mechanical Systems

- If necessary, make sure that the load is disconnected from mechanical systems.

● Brake Released

- Make sure that the brake is released.
- When FSoE communication is not established, SBC output terminal is not connected to the brake.

● Connection to Mechanical Systems

- Make sure that the load and Servomotor shaft are properly aligned.
- Make sure that the load on the Servomotor shaft is within specifications.

10-3-2 Test Run via USB Communications from the Sysmac Studio

1. Connect a sensor or other device to the control I/O connector (CN1).
2. Turn ON the Servo Drive power supply.
3. Connect a USB cable to the USB connector (CN7).
4. Start the Sysmac Studio and go online with the Servo Drive via USB communications.
5. In the Sysmac Studio, right-click the target Servo Drive under **Configurations and Setup**, and select **Test Run**.
6. Click the **Servo ON** button to apply the servo lock to the Servomotor.
7. Click the or button to start the Servomotor.

For how to use the Sysmac Studio, refer to the *Sysmac Studio Drive Functions Operation Manual* (Cat. No. I589).

Precautions for Correct Use

- A test run can be performed in the Profile position mode (pp) or Profile velocity mode (pv). If the torque compensation is set, the axes move because the compensation command is output when the Servo is turned ON.
- When you perform a test run via USB communications, pull out the EtherCAT cable before you turn ON the power supply to the Servo Drive. Also, SBC output terminal is turned OFF. Therefore, do not connect the SBC output terminal to a brake.
- When you perform a test run from the Sysmac Studio without EtherCAT connection, you cannot use the STO function via EtherCAT communications. If you need the STO function, use the STO function via safety input signals. In this case, display the test run pane so that you can reset STO status via safety input signals.
- If you need EtherCAT connection while you perform a test run from the Sysmac Studio without EtherCAT connection, first terminate the test run function and then perform EtherCAT connection.
- When you connect PC to the USB connector of the Servo Drive, separate the USB cable from other cables such as the main circuit power supply cable.

Additional Information

When you use an NJ/NX-series CPU Unit or NY-series IPC Machine Controller, you can perform a test run from the Sysmac Studio via EtherCAT. In this case, you can use the STO function via EtherCAT communications.

10-4 Confirmation of Safety Functions

This section describes a procedure for confirmations of safety functions used via EtherCAT communication.

10-4-1 Preparation Before Confirmation of Safety Function

Before confirmation of safety functions, you need to configure a safety device. The reason is that you need to confirm that inputs like safety switch, etc. activate safety functions properly.

For monitoring functions, you shall confirm the safety functions while a Servomotor is operating. Therefore, you need to set the same status as one where the device is operating like a case that motor gain, etc. was already adjusted.

Be sure to make the following preparations before confirmation of safety functions.

1 Adjust a Servo Drive/a Servomotor and confirm the operation.

At that time, refer to *Section 10, 10-1* to *Section 10, 10-3* and *Section 11*.

2 Wire the cable for a standard and design motors' operation programs for a safety.

Wire the Servo Drive, referring to *Section 3*.

Design the operation program, referring to user's manual for a standard controller.

3 Wire the cable for a safety and design the safety programs.

At that time, refer to *Section 8*.

4 Start up the safety system. Establish EtherCAT to achieve FSoE communication.

Connect a personnel computer to turn Sysmac Studio ON.

10-4-2 Confirmation of Safety Function

Confirmation of Safety Function

1 Set a standard controller to program mode.

2 When a Servo Drive for the confirmation of safety functions uses SBC function, confirm that a brake goes into hold states and external forces, etc. does not activate a Servomotor.

3 Startup a test run function to confirm the safety functions. Right-click Servo Drives for confirmation of safety functions with safety I/O of multi-view explorer. After that, click test run.

4 A test run screen is displayed. Turn ON the Servo.

When SBC function is used, deactivate STO function or release a brake with SBC command before you turn ON the Servo.

5 Activate safety functions. Press input switch to activate safety functions.

When an input device is a sensor, operate the device so that the output from the sensor is turned OFF.

6 Confirm a safety program of Sysmac Studio.

Follow procedures for input devices to confirm that safety functions in a Servo Drive are enable.

7 Issue an operation command to a Servo Drive in a test run screen for Sysmac Studio.

Confirm that the safety functions are activated correctly. Specifically, check a time until the safety functions are activated and correct thresholds of STO status.

Precautions for Correct Use

Confirm the installation that a motor operates at safe velocity and position before issue of the operation command.

8 After you detect an error and remove the factor, confirm that you can reset the error.

Even if you reset the error without removal of the factor, confirm that the error remains as it is.

9 When you finish the confirmation of the safety functions, turn OFF the Servo and close the test run screen.

10 Select a standard controller and open EtherCAT of multi-view explorer. Right-click the verified Servo Drive and click the property.

11 Click **Operation** button in the property screen.

12 For all Servo Drives, follow procedures 2 to 11.

13 Set a standard controller to operation mode.

Skip these procedures if “Check items before a standard controls a Servomotor” is required in the next chapter.

Check of Combination of Standard Function with Safety Function

Check Items before Motor’s Control at a Standard Side

1 Display I/O map for standard.

2 Press an input switch to activate safety functions.

If the input device is a sensor, turn an output from the sensor OFF.

3 Check variables assigned to Mirror Safety statusword of a Servo Drive.

If the value is TRUE, it means that the safety functions are activated.

4 Turn OFF the input switch or Turn ON the sensor mentioned as procedure 2 so that you can operate the input device.

5 Set a standard controller to an operation mode.

Check of Combination of Standard Function with Safety Function by Data Trace

You can check easily on whether safety functions are activated as expected by use of data trace functions of a standard controller. Follow the below setting procedures before carrying out a combined operation between standard functions and safety functions.[*1]

1 Add a data trace.

2 Open the added data trace.

3 Press button and click **Add safety related trace target** in the menu.

Select safety related trace target window is displayed.

4 Select an axis to check safety functions.

5 Select the safety functions.

6 Click **Add items to the list** button.

Variables necessary for operation check and SRA parameters are added.

7 When you check several safety functions at the same time, select other safety functions repeatedly and click **Add items to the list** button.

8 When you check several axes at the same time, select the axes and other safety functions repeatedly and click **Add items to the list** button.

9 Click **OK** button.

The selected axes and the trace items necessary for operation check of safety functions are added.

10 Set a trigger for data trace.

11 Start the trace. After finish of this procedure, when a trigger is detected, the data trace is executed.

● Check of Combination of Standard Function with Safety Function

1 Operate a program to drive a motor at a standard side.

2 Press an input switch to activate safety functions.

If the input device is a sensor, turn an output from the sensor OFF.

3 In the standard program, check that the standard controller gives commands that motor rotates in a safe range/limit of monitoring position and the velocity by use of data trace functions set in advance.

As for the specific procedure, refer to *Check of Combination of Standard Function with Safety Function by Data Trace* on page 10-11 in the former page.

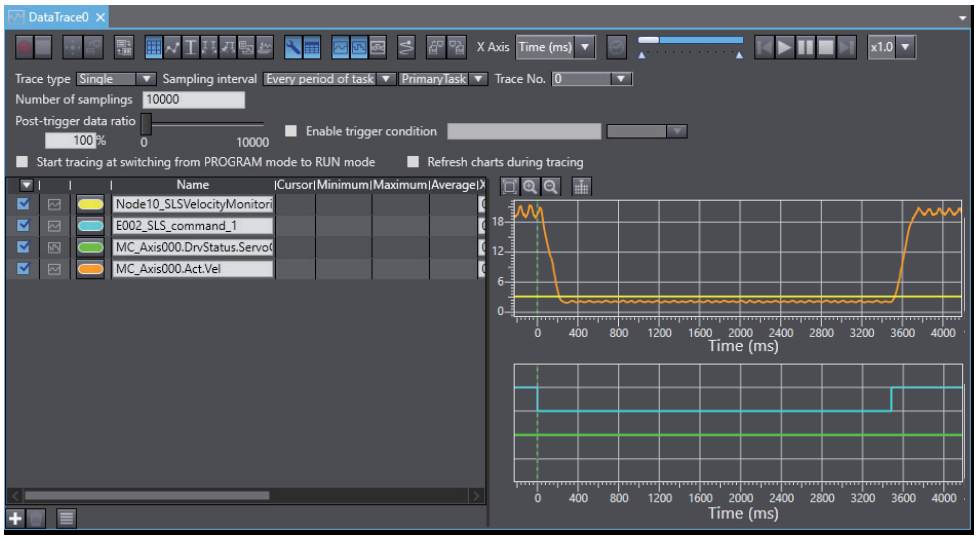

4 Turn OFF the input switch or Turn ON the sensor mentioned as procedure 2 so that you can operate the input device.

5 Check the input device operates while the program is operating in the procedure.1.

*1. When you check combination of standard functions with safety functions by data trace, it is necessary to create an axis for MC function module in advance. As for the detail, refer to the *NJ/NX-series CPU Unit Motion Control User's Manual* (Cat. No. W507).

11

Adjustment Functions

This section explains the functions, setting methods, and items to note regarding adjustments.

11-1 Outline of Adjustment Functions 11-3
- 11-1-1 Adjustment Methods 11-3
- 11-1-2 Adjustment Procedure 11-4

11-2 Easy Tuning 11-6
- 11-2-1 Objects That Are Set 11-6
- 11-2-2 Executing Easy Tuning 11-8

11-3 Advanced Tuning 11-9
- 11-3-1 Objects That Are Set 11-9
- 11-3-2 Executing Advanced Tuning 11-10

11-4 Manual Tuning 11-11
- 11-4-1 Objects That Are Set 11-11
- 11-4-2 Executing Manual Tuning 11-11

11-5 Data Trace 11-12

11-6 FFT 11-13

11-7 Damping Control 11-14
- 11-7-1 Objects Requiring Settings 11-14
- 11-7-2 Operating Procedure 11-16
- 11-7-3 Setting Frequency with Sysmac Studio 11-17

11-8 Load Characteristic Estimation 11-18
- 11-8-1 Objects Requiring Settings 11-19
- 11-8-2 Setting Load Characteristic Estimation Function 11-20

11-9 Adaptive Notch Filter 11-21
- 11-9-1 Objects Requiring Settings 11-21
- 11-9-2 Operating Procedure 11-22

11-10 Notch Filters 11-23
- 11-10-1 Objects Requiring Settings 11-24
- 11-10-2 Notch Filter Width and Depth 11-25

11-11 Friction Torque Compensation Function 11-26
11-11-1 Operating Conditions 11-26
11-11-2 Objects Requiring Settings 11-26
11-11-3 Operation Example 11-27
11-12 Feed-forward Function 11-29
11-12-1 Feed-forward Control in TDF Control 11-29
11-12-2 Feed-forward Control in ODF Control 11-31

11-1 Outline of Adjustment Functions

The Servo Drive must operate the Servomotor in response to commands without time delay and with reliability to maximize the performance of the machine. The Servo Drive is adjusted according to the characteristics of the machine.

Precautions for Safe Use

- Motor operation is required during adjustment. Take sufficient measures to ensure safety.
- Especially, if unusual noise or vibration occurs, immediately turn OFF the power supply or turn OFF the Servo.

11-1-1 Adjustment Methods

The adjustment function of the Sysmac Studio Automation Software and the automatic adjustment function of the Servo Drive facilitate adjustment according to your purpose.

Adjustment Function of Sysmac Studio

Use the Sysmac Studio to execute the following adjustment functions and monitor data for adjustment.

For how to operate the Sysmac Studio, refer to the *Sysmac Studio Drive Functions Operation Manual* (Cat. No. I589).

Function	Description	Reference
Easy Tuning	Adjusts the gain automatically while motor operation is repeated. Use this function to perform adjustment easily.	P. 11-6
Advanced Tuning	Uses simulation to perform adjustment with minimum motor operation. Fine setting adjustment is possible for each parameter including the gain and filter.	P. 11-9
Manual Tuning	Adjusts multiple gains at a time according to the one set parameter.	P. 11-11
Data Trace	Measures commands to the motor and motor operation (velocity, command torque and following error) and displays them with waveforms.	P. 11-12
FFT	Measures the frequency characteristics of velocity closed loop.	P. 11-13
Damping Control	Automatically detects the vibration frequency. This function makes it easy to set damping control.	P. 11-14

Automatic Adjustment Function of Servo Drive

The Servo Drive has the following automatic adjustment functions.

Function	Description	Reference
Load Characteristic Estimation	Estimates the load characteristics of the machine in realtime and sets the values of the inertia ratio and friction torque compensation automatically according to the result of estimation.	P. 11-18
Adaptive Notch Filter	Reduces vibration by estimating the resonance frequency and automatically setting the frequency of the notch filter.	P. 11-21

Manual Adjustment Function of Servo Drive

The Servo Drive has the following manual adjustment functions.

Function	Description	Reference
Notch Filter	Reduces vibration according to the specified resonance frequency.	P. 11-23
Friction Torque Compensation	Reduces the influence of mechanical frictions.	P. 11-26
Feed-forward	Uses the velocity and torque feed-forward to increase responsiveness.	P. 11-29
Damping Control	Reduces vibration of tips that occurs in low-rigidity machines.	P. 11-14

11-1-2 Adjustment Procedure

Use the following procedure to perform adjustment.

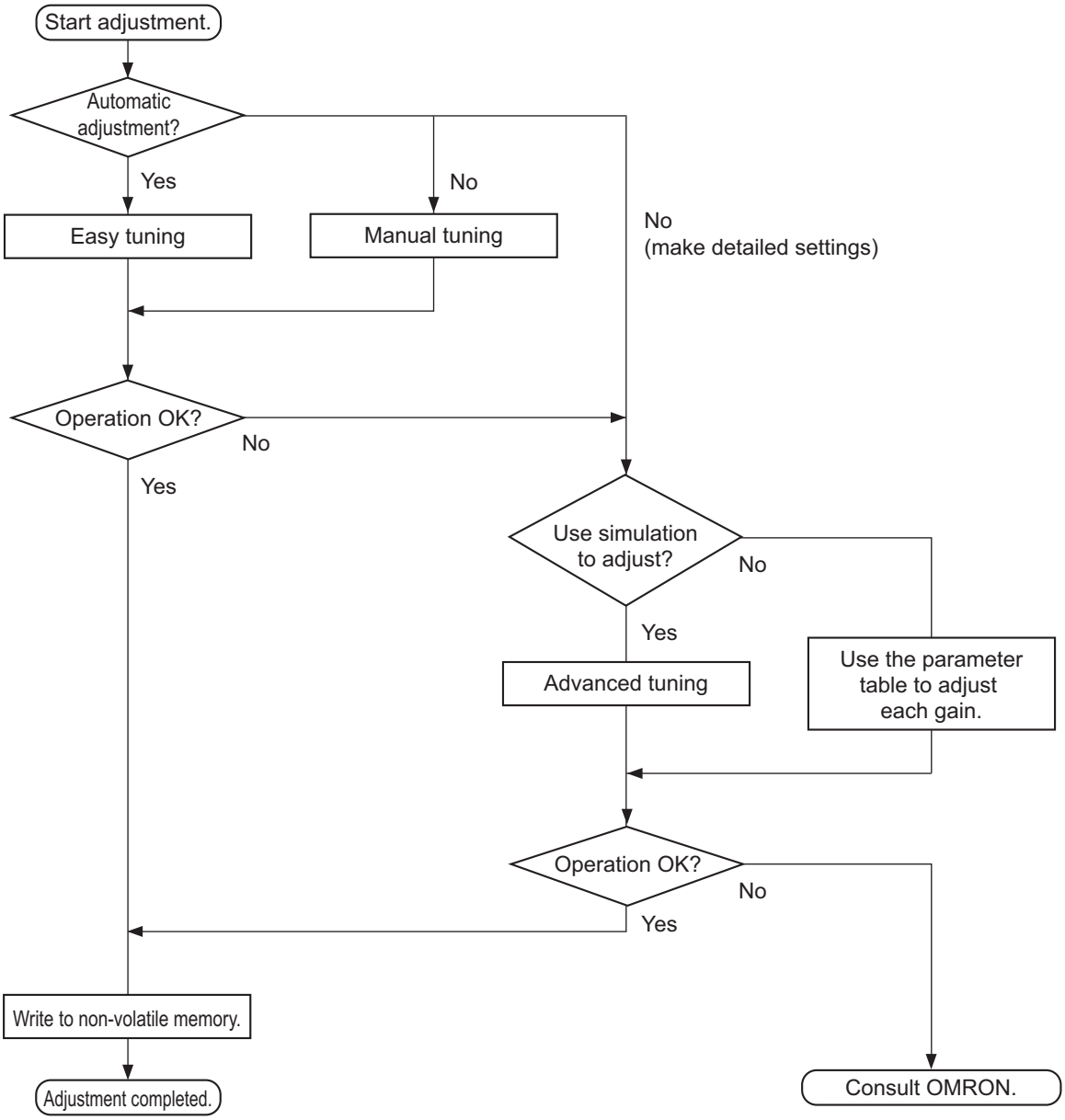

Gain Adjustment and Machine Rigidity

The natural vibration (resonance) of mechanical systems has a large impact on the gain adjustment of the Servo. The servo system responsiveness cannot be set high for machines with a low resonance frequency (low machine rigidity).

To improve machine rigidity:

- Install the machine on a secure base so that it does not have any play.
- Use couplings that have a high rigidity, and that are designed for servo systems.
- When you use a timing belt, select a wide one. Use a tension within the range of allowable axial load for the Servomotor or decelerator output.
- When you use gears, select ones with small backlash.

11-2 Easy Tuning

This function adjusts the gain automatically while the Servomotor is actually operated based on commands from the Controller or operation conditions that are set on the Sysmac Studio.

It is possible to select the single drive or multiple drives tuning method.

In the system with the synchronized axes, you can adjust the gain at the same time in a short time by the use of the easy tuning for multiple drives.

11-2-1 Objects That Are Set

This section gives the objects that are set when the easy tuning is executed.

Objects That Are Adjusted Automatically

The values of the following objects are adjusted automatically when the easy tuning is executed.

Index (hex)	Subindex (hex)	Name	Reference
3011	---	Position Command Filter	P. 9-18
	04	IIR Filter Cutoff Frequency	P. 9-18
3120	---	TDF Position Control	P. 9-31
	11	Command Following Gain 2*1	P. 9-32
3213	---	1st Position Control Gain	P. 9-36
	01	Proportional Gain	P. 9-36
3214	---	2nd Position Control Gain	P. 9-37
	01	Proportional Gain	P. 9-37
3223	---	1st Velocity Control Gain	P. 9-39
	01	Proportional Gain	P. 9-39
	02	Integral Gain	P. 9-39
3224	---	2nd Velocity Control Gain	P. 9-40
	01	Proportional Gain	P. 9-40
	02	Integral Gain	P. 9-40
3233	---	1st Torque Command Filter	P. 9-42
	02	Cutoff Frequency	P. 9-42
3234	---	2nd Torque Command Filter	P. 9-43
	02	Cutoff Frequency	P. 9-43

*1. This object is automatically adjusted only when the multiple drives tuning method is selected.

Objects That Are Changed According to Easy Tuning Settings

The values of the following objects are changed according to the settings that are configured when the easy tuning is executed.

Index (hex)	Subindex (hex)	Name	Reference
3001	---	Machine	P. 9-13
	01	Inertia Ratio	P. 9-13
3120	---	TDF Position Control	P. 9-31
	01	Command Following Gain*1	P. 9-32
	10	Command Following Gain Selection*1	P. 9-32
3310	---	Torque Compensation	P. 9-44
	01	Viscous Friction Coefficient	P. 9-44
	02	Unbalanced Load Compensation	P. 9-44
	03	Positive Dynamic Friction Compensation	P. 9-44
	04	Negative Dynamic Friction Compensation	P. 9-45
3320	---	Adaptive Notch Filter	P. 9-46
	01	Adaptive Notch Selection	P. 9-46
3321	---	1st Notch Filter	P. 9-47
	01	Enable	P. 9-47
	02	Frequency	P. 9-47
	03	Q-value	P. 9-47
	04	Depth	P. 9-48
3322	---	2nd Notch Filter	P. 9-49
	01	Enable	P. 9-49
	02	Frequency	P. 9-49
	03	Q-value	P. 9-49
	04	Depth	P. 9-50
3323	---	3rd Notch Filter	P. 9-51
	01	Enable	P. 9-51
	02	Frequency	P. 9-51
	03	Q-value	P. 9-51
	04	Depth	P. 9-52
3324	---	4th Notch Filter	P. 9-53
	01	Enable	P. 9-53
	02	Frequency	P. 9-53
	03	Q-value	P. 9-53
	04	Depth	P. 9-54
3B51	---	Positioning Completion Notification	P. 9-73
	01	Position Window	P. 9-73
3B80	---	Load Characteristic Estimation	P. 9-78
	01	Inertia Ratio Update Selection	P. 9-78
	02	Viscous Friction Compensation Update Selection	P. 9-78
	03	Unbalanced Load Compensation Update Selection	P. 9-79
	04	Dynamic Friction Compensation Update Selection	P. 9-79

*1. This object is changed only in two-degree-of-freedom (TDF) control.

Objects That Are Set to Fixed Values

The following objects are set to the fixed values when the easy tuning is executed.

Index (hex)	Subindex (hex)	Name	Unit	Set value	Reference
3011	---	Position Command Filter	---	---	P. 9-18
	03	IIR Filter Enable	---	1	P. 9-18
3112	---	ODF Velocity Feed-forward	---	---	P. 9-29
	01	Gain	0.1%	300	P. 9-29
	02	LPF Enable	---	0	P. 9-29
	03	LPF Cutoff Frequency	0.1 Hz	50,000	P. 9-29
3113	---	ODF Torque Feed-forward	---	---	P. 9-30
	01	Gain	0.1%	0	P. 9-30
	02	LPF Enable	---	0	P. 9-31
	03	LPF Cutoff Frequency	0.1 Hz	50,000	P. 9-31
3233	---	1st Torque Command Filter	---	---	P. 9-42
	01	Enable	---	1	P. 9-42
3234	---	2nd Torque Command Filter	---	---	P. 9-43
	01	Enable	---	1	P. 9-43
3B80	---	Load Characteristic Estimation	---	---	P. 9-78
	05	Viscous Friction Tuning Coefficient	%	100	P. 9-79

11-2-2 Executing Easy Tuning

Use the Sysmac Studio to execute the easy tuning.

For how to use, refer to the *Sysmac Studio Drive Functions Operation Manual (Cat. No. I589)*.

Precautions for Correct Use

Easy tuning is performed by the use of the automatic adjustment function of the Servo Drive (Load Characteristic Estimation and Adaptive Notch Filter).

If each function does not operate properly, the automatic adjustment by the easy tuning also may not operate properly.

Refer to *11-8 Load Characteristic Estimation* on page 11-18 and *11-9 Adaptive Notch Filter* on page 11-21 for details.

11-3 Advanced Tuning

This function uses simulation to adjust the gain and filter settings. Repeating actual Servomotor operation is not necessary, and a fine adjustment is possible in a short period of time.

11-3-1 Objects That Are Set

This section gives the objects that are set when the advanced tuning is executed.

Objects That Are Adjusted with Advanced Tuning

The advanced tuning adjusts the values of the following objects.

Index (hex)	Subindex (hex)	Name	Reference
3011	---	Position Command Filter	P. 9-18
	03	IIR Filter Enable	P. 9-18
	04	IIR Filter Cutoff Frequency	P. 9-18
3112	---	ODF Velocity Feed-forward	P. 9-29
	01	Gain	P. 9-29
	02	LPF Enable	P. 9-29
	03	LPF Cutoff Frequency	P. 9-29
3113	---	ODF Torque Feed-forward	P. 9-30
	01	Gain	P. 9-30
	02	LPF Enable	P. 9-31
	03	LPF Cutoff Frequency	P. 9-31
3120	---	TDF Position Control	P. 9-31
	01	Command Following Gain	P. 9-31
3121	---	TDF Velocity Control	P. 9-32
	01	Command Following Gain	P. 9-32
3213	---	1st Position Control Gain	P. 9-36
	01	Proportional Gain	P. 9-36
3223	---	1st Velocity Control Gain	P. 9-39
	01	Proportional Gain	P. 9-39
	02	Integral Gain	P. 9-39
3233	---	1st Torque Command Filter	P. 9-42
	01	Enable	P. 9-42
	02	Cutoff Frequency	P. 9-42
3321	---	1st Notch Filter	P. 9-47
	01	Enable	P. 9-47
	02	Frequency	P. 9-47
	03	Q-value	P. 9-47
	04	Depth	P. 9-48
3322	---	2nd Notch Filter	P. 9-49
	01	Enable	P. 9-49
	02	Frequency	P. 9-49
	03	Q-value	P. 9-49
	04	Depth	P. 9-50

Index (hex)	Subindex (hex)	Name	Reference
3323	---	3rd Notch Filter	P. 9-51
	01	Enable	P. 9-51
	02	Frequency	P. 9-51
	03	Q-value	P. 9-51
	04	Depth	P. 9-52
3324	---	4th Notch Filter	P. 9-53
	01	Enable	P. 9-53
	02	Frequency	P. 9-53
	03	Q-value	P. 9-53
	04	Depth	P. 9-54

11-3-2 Executing Advanced Tuning

Use the Sysmac Studio to execute the advanced tuning.

For how to use, refer to the *Sysmac Studio Drive Functions Operation Manual* (Cat. No. I589).

11-4 Manual Tuning

This function adjusts the values of multiple gain parameters at a time according to set values for machine rigidity that are manually adjusted.

11-4-1 Objects That Are Set

This section gives the objects that are set when the manual tuning is executed.

Objects That Are Changed According to Set Values for Machine Rigidity

The values of the following objects are changed according to the set values for machine rigidity.

Index (hex)	Subindex (hex)	Name	Reference
3011	---	Position Command Filter	P. 9-18
	04	IIR Filter Cutoff Frequency	P. 9-18
3213	---	1st Position Control Gain	P. 9-36
	01	Proportional Gain	P. 9-36
3214	---	2nd Position Control Gain	P. 9-37
	01	Proportional Gain	P. 9-37
3223	---	1st Velocity Control Gain	P. 9-39
	01	Proportional Gain	P. 9-39
	02	Integral Gain	P. 9-39
3224	---	2nd Velocity Control Gain	P. 9-40
	01	Proportional Gain	P. 9-40
	02	Integral Gain	P. 9-40
3233	---	1st Torque Command Filter	P. 9-42
	02	Cutoff Frequency	P. 9-42
3234	---	2nd Torque Command Filter	P. 9-43
	02	Cutoff Frequency	P. 9-43

Objects That Are Set to Fixed Values

The following objects are set to the fixed values when the manual tuning is executed.

Index (hex)	Subindex (hex)	Name	Unit	Set value	Reference
3011	---	Position Command Filter	---	---	P. 9-18
	03	IIR Filter Enable	---	1	P. 9-18
3233	---	1st Torque Command Filter	---	---	P. 9-42
	01	Enable	---	1	P. 9-42
3234	---	2nd Torque Command Filter	---	---	P. 9-43
	01	Enable	---	1	P. 9-43

11-4-2 Executing Manual Tuning

Use the Sysmac Studio to execute the manual tuning.

For how to use, refer to the *Sysmac Studio Drive Functions Operation Manual* (Cat. No. I589).

11-5 Data Trace

This function takes samples of commands to the Servomotor and motor operation (position, velocity, and torque) at regular intervals, and displays the tracing results by the use of the Sysmac Studio.

For 1S-series Servo Drives, the data trace on single Servo Drive and the synchronized data trace on multiple Servo Drives are provided.

The data trace on multiple Servo Drives can perform synchronized sampling on up to four Servo Drives. The results are displayed on the same window.

For how to use, refer to the *Sysmac Studio Drive Functions Operation Manual* (Cat. No. I589).

11-6 FFT

When you use the Sysmac Studio, you can measure the frequency characteristics of velocity closed loop.

For how to use, refer to the *Sysmac Studio Drive Functions Operation Manual* (Cat. No. I589).

11-7 Damping Control

If the tip of the mechanical unit vibrates, you can use the damping control function to reduce vibration.

This is effective on vibration generated by a low-rigidity machine. The applicable frequencies are from 0.5 to 300 Hz.

Two damping filters, the Damping Filter 1 and 2, are provided to control two vibration frequencies simultaneously. Up to four damping frequencies can be set for each damping filter. This enables you to switch the damping frequency from one to another when it varies depending on the position.

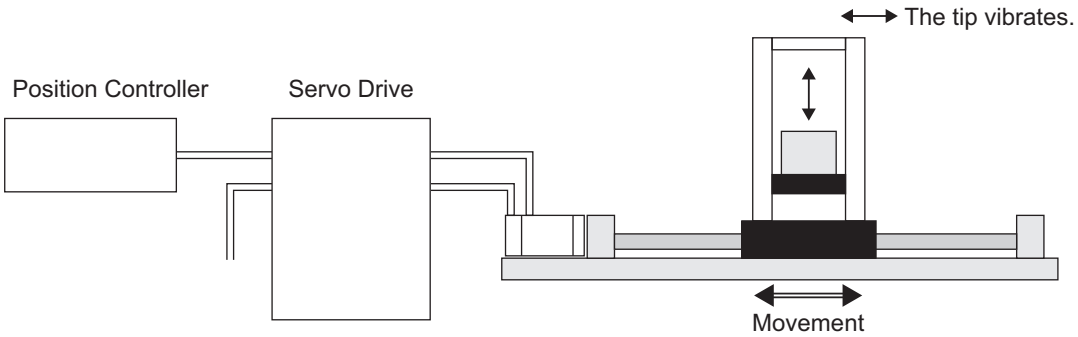

Precautions for Correct Use

If you change the operation mode while damping control is used, stop the Servomotor before you change the mode. Changing the operation mode during motor operation may result in unexpected operation.

11-7-1 Objects Requiring Settings

Index (hex)	Subindex (hex)	Name	Description	Reference
3012	---	Damping Control	Selects the damping filters.	P. 9-19
	01	Damping Filter 1 Selection	Selects the setting to use for the damping filter 1. 0: Disabled 1: 1st Frequency and 1st Damping Time Coefficient 2: 2nd Frequency and 2nd Damping Time Coefficient 3: 3rd Frequency and 3rd Damping Time Coefficient 4: 4th Frequency and 4th Damping Time Coefficient	P. 9-19
	02	Damping Filter 2 Selection	Selects the setting to use for the damping filter 2. The function is the same as 01 hex.	P. 9-19

Index (hex)	Subindex (hex)	Name	Description	Reference
3013	---	Damping Filter 1	Sets the damping filter 1.	P. 9-20
	01	1st Frequency	Sets the damping frequency for the damping filter.	P. 9-20
	02	1st Damping Time Coefficient	Sets the trade-off with torque required for the vibration suppression time and damping. Setting a small value shortens the time to suppress the vibration, however it is highly possible that torque saturation occurs.	P. 9-20
	03	2nd Frequency	The function is the same as 01 hex.	P. 9-20
	04	2nd Damping Time Coefficient	The function is the same as 02 hex.	P. 9-20
	05	3rd Frequency	The function is the same as 01 hex.	P. 9-20
	06	3rd Damping Time Coefficient	The function is the same as 02 hex.	P. 9-21
	07	4th Frequency	The function is the same as 01 hex.	P. 9-21
	08	4th Damping Time Coefficient	The function is the same as 02 hex.	P. 9-21
3014	–	Damping Filter 2	Sets the damping filter 2.	P. 9-21
	01	1st Frequency	Sets the damping frequency for the damping filter.	P. 9-21
	02	1st Damping Time Coefficient	Sets the trade-off with torque required for the vibration suppression time and damping. Setting a small value shortens the time to suppress the vibration, however it is highly possible that torque saturation occurs.	P. 9-21
	03	2nd Frequency	The function is the same as 01 hex.	P. 9-22
	04	2nd Damping Time Coefficient	The function is the same as 02 hex.	P. 9-22
	05	3rd Frequency	The function is the same as 01 hex.	P. 9-22
	06	3rd Damping Time Coefficient	The function is the same as 02 hex.	P. 9-22
	07	4th Frequency	The function is the same as 01 hex.	P. 9-22
	08	4th Damping Time Coefficient	The function is the same as 02 hex.	P. 9-22

Precautions for Correct Use

- Stop operation before changing the object settings.
- Damping control may not function properly or have no effect under the following conditions.

Item	Conditions that interfere with the effect of damping control
Load condition	• If forces other than position commands, such as external forces, cause vibration • If the damping frequency is outside the range of 0.5 to 300 Hz • If the ratio of the resonance frequency to anti-resonance frequency is large

11-7-2 Operating Procedure

1 Adjust the position loop gain and the velocity loop gain.

In the easy tuning, manual tuning, advanced tuning, etc., Adjust **1st Position Control Gain** or **2nd Position Control Gain** (1st: 3213 hex, 2nd: 3214 hex), **1st Velocity Control Gain** or **2nd Velocity Control Gain** (1st: 3223 hex, 2nd: 3224 hex), and **1st Torque Command Filter** or **2nd Torque Command Filter** (1st: 3233 hex, 2nd: 3234 hex).

2 Measure the vibration frequency at the tip of the mechanical unit.

Measure the vibration frequency by using a device such as a laser displacement meter, servo accelerometer, and acceleration pick-up.

Set the measured vibration frequency in one of **1st to 4th Frequency** (01 hex, 03 hex, 05 hex, 07 hex) of **Damping Filter 1** or **2** (1: 3013 hex, 2: 3014 hex). Also set **Damping Filter 1 Selection** (01 hex) or **Damping Filter 2 Selection** (02 hex) of **Damping Control** (3012 hex) so that the frequency set in the above step is enabled.

If the frequency is set in **1st Frequency** (01 hex) of **Damping Filter 1** (3013 hex), set **Damping Filter 1 Selection** (01 hex) of **Damping Control** (3012 hex) to *1*.

If vibration persists after you set the frequency, increase or decrease the damping frequency to find a proper frequency at which vibration decreases.

3 Make the damping filter settings.

Set the corresponding damping time coefficient of **Damping Filter 1** or **Damping Filter 2** (1: 3013 hex, 2: 3014 hex).

First, set it to 100% and check the torque waveform during operation. Setting a value smaller than 100% for the damping time can shorten the vibration suppression time, but it increases the maximum operation speed and torque command. Set the damping time within a range in which the maximum motor velocity is not exceeded and torque saturation does not occur. The effects of vibration suppression will be lost if the maximum motor velocity is exceeded or torque saturation occurs.

Also, setting a large value for the damping time can reduce the torque command while the setting time gets long.

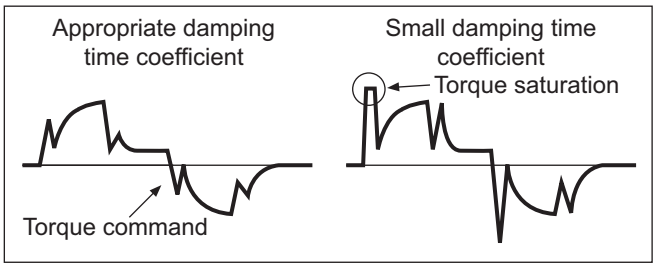

4 Set **Damping Control** (3012 hex).

You can switch Damping filter 1 and 2 according to the conditions of the machine vibration.

Set value (hex)	Description
01	Damping Filter 1 Selection
02	Damping Filter 2 Selection

11-7-3 Setting Frequency with Sysmac Studio

When you use a function of the Sysmac Studio, you can set the damping control easily based on the vibration frequency that is detected automatically.

For how to use, refer to the *Sysmac Studio Drive Functions Operation Manual* (Cat. No. I589).

11-8 Load Characteristic Estimation

The Load Characteristic Estimation function estimates the load characteristics of the machine in realtime, and sets values of the inertia ratio, viscous friction coefficient, unbalanced load compensation, and dynamic friction compensation automatically according to the result of estimation.

You can check the values that are set automatically with **Machine** – **Inertia Ratio Display** (3001-81 hex), **Torque Compensation** – **Viscous Friction Coefficient Display** (3310-81 hex), **Unbalanced Load Compensation Display** (3310-82 hex), and **Dynamic Friction Compensation Display** (3310-83 hex and 3310-84 hex).

This Load Characteristic Estimation function is enabled in the position control, velocity control, and torque control.

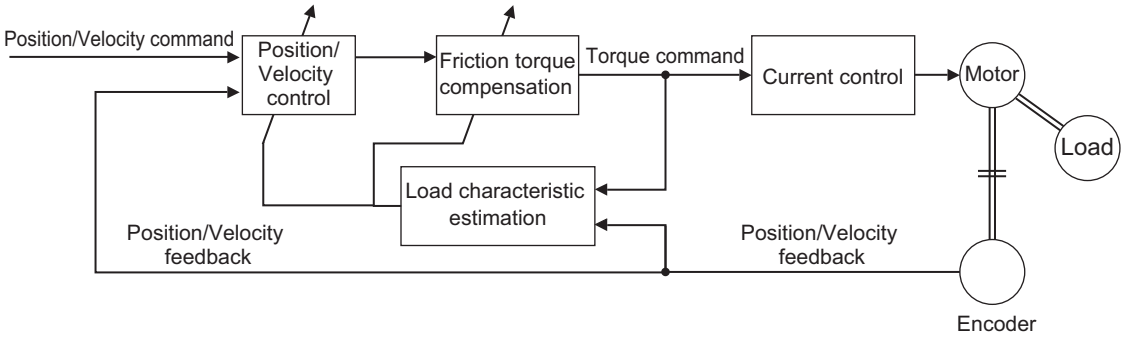

Precautions for Correct Use

- The Load Characteristic Estimation function may not operate properly under the following conditions. In such cases, set the related objects manually.

	Conditions that interfere with the Load Characteristic Estimation function
Load inertia	• If the load inertia is small, i.e. less than 3 times the rotor inertia or large, i.e. the applicable load inertia or more • If the load inertia changes easily
Load	• If the machine rigidity is extremely low • If there is a non-linear element (play), such as a backlash
Operation	• If the speed continues at lower than 100 r/min • If the acceleration/deceleration is 2,000 r/min/s or lower • If the acceleration/deceleration torque is small compared with the unbalanced load and the friction torque • If the speed or torque oscillates due to the high gain or small effect of each filter.

11-8-1 Objects Requiring Settings

Index (hex)	Subindex (hex)	Name	Description	Reference
3B80	---	Load Characteristic Estimation	Sets the operation of the load characteristic estimation.	P. 9-78
	01	Inertia Ratio Update Selection	Selects whether to estimate load characteristics and update a value of the inertia ratio. 0: Use the present set value. 1: Update with the estimation result.	P. 9-78
	02	Viscous Friction Compensation Update Selection	Selects whether to estimate load characteristics and update a value of the viscous friction coefficient. 0: Use the present set value. 1: Update with the estimation result.	P. 9-78
	03	Unbalanced Load Compensation Update Selection	Selects whether to estimate load characteristics and update a value of the unbalanced load compensation. 0: Use the present set value. 1: Update with the estimation result.	P. 9-79
	04	Dynamic Friction Compensation Update Selection	Selects whether to estimate load characteristics and update a value of the dynamic friction compensation. 0: Use the present set value. 1: Update with the estimation result.	P. 9-79
	05	Viscous Friction Tuning Coefficient	Sets the value to adjust the amount of torque compensation which is calculated from the estimated viscous friction value. When the viscous friction coefficient update is enabled, the viscous friction coefficient is updated with a value which is calculated by multiplying the estimated viscous friction by the amount of viscous friction compensation.	P. 9-79
	06	Estimation Sensitivity Selection	Selects the sensitivity to estimate load characteristics from load changes during the load characteristic estimation. 0: Estimate by minutes from load characteristic changes. This setting is used when there is a little change in load characteristics. 1: Estimate by seconds from load characteristic changes. This setting is used when there is a gradual change in load characteristics. 2: Estimate immediately from load characteristic changes. This setting is used when there is a sharp change in load characteristics.	P. 9-79
	FF	Estimation Status	Gives the execution status of the load characteristic estimation. 0: Never executed 1: Obtaining data 2: During estimation 3: Estimation completed	P. 9-80

11-8-2 Setting Load Characteristic Estimation Function

1 Turn OFF the Servo before you set the load characteristic estimation function.

2 Set **Update Selections** (3B80-01 to 3B80-04 hex) depending on the load.

If compensation for friction and unbalanced loads is not required, set only **Inertia Ratio Update Selection** (01 hex) to *1*.

If you use this function for a vertical axis, set **Unbalanced Load Compensation Update Selection** (03 hex) to *1*.

If you use this function for a device with high friction, set **Viscous Friction Compensation Update Selection** (02 hex) and **Dynamic Friction Compensation Update Selection** (04 hex) to *1*.

3 Turn ON the Servo to operate the Servomotor.

The values of the objects for which update is enabled are set automatically in realtime with the estimation results.

If you want to hold the value of an object that is set automatically, set the corresponding update selection object to *0*. Then, execute **Optimized Parameters** – **Apply Parameters** (3002-F1 hex) and **Store Parameters** (1010-01 hex).

Precautions for Correct Use

- If the value that is set in the **Inertia Ratio** (3001-01 hex) is extremely different from the load inertia, operation may be unstable. In such a case, during this function operation, noise, vibration, velocity over the command, or overshooting may occur until the load inertia estimation is completed.
- If the unusual noise or vibration continues, take the following measures in the possible order.
  - Write the objects that you used during normal operation to the non-volatile memory.
  - Lower the gain.
  - Manually set the notch filter.
- If unusual noise or vibration occurs, the setting of the inertia ratio or friction torque compensation may be changed to an extreme value. In such a case, check the values of **Machine** – **Inertia Ratio Display** (3001-81 hex), **Torque Compensation** – **Viscous Friction Coefficient Display** (3310-81 hex), **Torque Compensation** – **Unbalanced Load Compensation Display** (3310-82 hex), and **Torque Compensation** – **Positive/Negative Dynamic Friction Compensation Display** (3310-83 hex and 3310-84 hex) and take the above measures.

11-9 Adaptive Notch Filter

The Adaptive Notch Filter reduces resonance frequency vibration by estimating the resonance frequency from the vibration component that appears in the motor speed during actual operation and automatically setting the frequency of the notch filter, which removes the resonance component from the internal torque command.

You can check the values that are set automatically with **1st Notch Filter** (3321 hex)/**2nd Notch Filter** (3322 hex)/**3rd Notch Filter** (3323 hex)/**4th Notch Filter** (3324 hex) – **Frequency Display** (Subindex 82 hex), **Q-value Display** (Subindex 83 hex), and **Depth Display** (Subindex 84 hex).

Refer to *11-10 Notch Filters* on page 11-23 for information on notch filter.

Operation Example

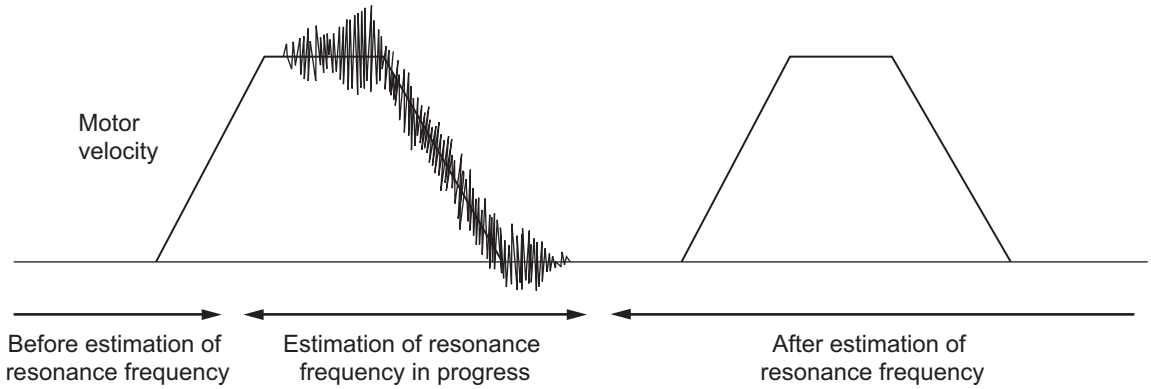

11-9-1 Objects Requiring Settings

Index (hex)	Subindex (hex)	Name	Description	Reference
3320	---	Adaptive Notch Filter	Sets the adaptive notch filter.	P. 9-46
	01	Adaptive Notch Selection	Selects the notch filter to adapt the estimation result. This object is disabled when 0 is set. 0: Disabled 1: 1st Notch Filter 2: 2nd Notch Filter 3: 3rd Notch Filter 4: 4th Notch Filter	P. 9-46
	03	Resonance Detection Threshold	Sets the torque output to detect the resonance, as a percentage of the rated torque.	P. 9-46

Precautions for Correct Use

- The adaptive notch filter may not operate properly under the following conditions.

Item	Conditions that interfere with the adaptive filter
Resonance frequency	• If the resonance frequency is 300 Hz or lower • If the resonance peak or control gain is too low to affect the motor speed • If more than one resonance frequency occurs
Load	• If the motor speed with high-frequency components changes due to backlash or other non-linear elements
Command pattern	• If the acceleration/deceleration is 3,000 r/min/s or higher

- If the adaptive notch filter does not operate properly, disable it and manually set the notch filter. Refer to *11-10 Notch Filters* on page 11-23 for information on notch filter.

11-9-2 Operating Procedure

1 Set **Adaptive Notch Filter** (3320 hex).

Select adaptive notch filter from 1 to 4 in **Adaptive Notch Filter - Adaptive Notch Selection** (3320-01 hex).

2 Start actual operation.

Enter an operation command and start the actual operation.

3 The notch filter is automatically set.

When the influence of resonance frequency appears in the motor speed, the selected notch filter is set automatically.

Precautions for Correct Use

- After startup, immediately after the first servo ON, unusual noise or vibration may occur until the adaptive notch filter stabilizes. This is not an error if it disappears right away. If the vibration or unusual noise, however, continues for three or more reciprocating operations, take the following measures in the possible order.
  - Write the value that are used during normal operation to the notch filter, and save the value in the non-volatile memory.
  - Disable the adaptive notch filter by setting **Adaptive Notch Selection** (3320-01 hex) to *0*.
  - Manually set the notch filter.
- If unusual noise or vibration occurs, the setting of the notch filter selected in Adaptive Notch Selection may be changed to an extreme value. In this case, disable Adaptive Notch Filter and then disable the selected Notch Filter. Next, enable Adaptive Notch Filter again.

11-10 Notch Filters

A notch filter reduces a specified frequency component.

When the machine rigidity is low, factors such as axis torsion may produce resonance which results in vibration and noise. Thus you may not be able to set a high gain. The notch filter suppresses the resonance peak to reduce vibration and noise, and allows you to set a high gain.

The 1S-series Servo Drives provide four notch filters for which you can adjust each frequency, width and depth.

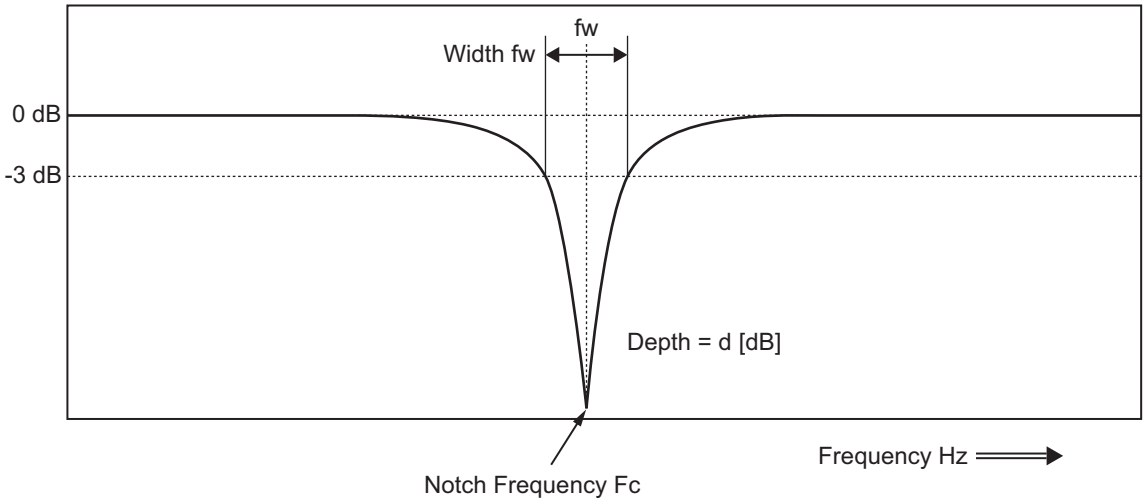

If mechanical resonance occurs, use this notch filter to eliminate resonance.

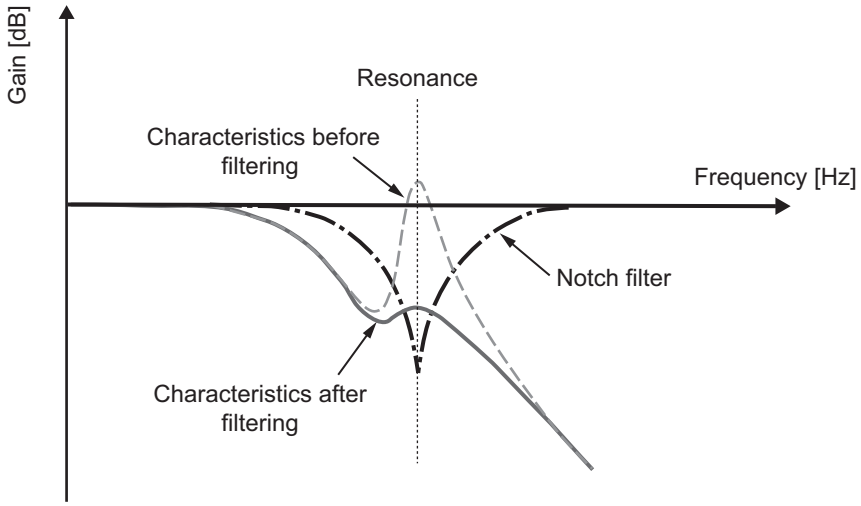

11-10-1 Objects Requiring Settings

Index (hex)	Subindex (hex)	Name	Description	Reference
3321	---	1st Notch Filter	Sets the 1st resonance suppression notch filter.	P. 9-47
	01	Enable	Selects whether to enable or disable the 1st notch filter function. 0: Disabled 1: Enabled	P. 9-47
	02	Frequency	Sets the notch frequency of the 1st resonance suppression notch filter.	P. 9-47
	03	Q-value	Sets the Q-value of the 1st resonance suppression notch filter.	P. 9-47
	04	Depth	Sets the notch depth of the 1st resonance suppression notch filter.	P. 9-48
3322	---	2nd Notch Filter	Sets the 2nd resonance suppression notch filter.	P. 9-49
	01	Enable	Selects whether to enable or disable the 2nd notch filter function. The function is the same as 3321 hex. 0: Disabled 1: Enabled	P. 9-49
	02	Frequency	Sets the notch frequency of the 2nd resonance suppression notch filter. The function is the same as 3321 hex.	P. 9-49
	03	Q-value	Sets the Q-value of the 2nd resonance suppression notch filter. The function is the same as 3321 hex.	P. 9-49
	04	Depth	Sets the notch depth of the 2nd resonance suppression notch filter. The function is the same as 3321 hex.	P. 9-50
3323	---	3rd Notch Filter	Sets the 3rd resonance suppression notch filter.	P. 9-51
	01	Enable	Selects whether to enable or disable the 3rd notch filter function. The function is the same as 3321 hex. 0: Disabled 1: Enabled	P. 9-51
	02	Frequency	Sets the notch frequency of the 3rd resonance suppression notch filter. The function is the same as 3321 hex.	P. 9-51
	03	Q-value	Sets the Q-value of the 3rd resonance suppression notch filter. The function is the same as 3321 hex.	P. 9-51
	04	Depth	Sets the notch depth of the 3rd resonance suppression notch filter. The function is the same as 3321 hex.	P. 9-52
3324	---	4th Notch Filter	Sets the 4th resonance suppression notch filter.	P. 9-53
	01	Enable	Selects whether to enable or disable the 4th notch filter function. The function is the same as 3321 hex. 0: Disabled 1: Enabled	P. 9-53
	02	Frequency	Sets the notch frequency of the 4th resonance suppression notch filter. The function is the same as 3321 hex.	P. 9-53
	03	Q-value	Sets the Q-value of the 4th resonance suppression notch filter. The function is the same as 3321 hex.	P. 9-53
	04	Depth	Sets the notch depth of the 4th resonance suppression notch filter. The function is the same as 3321 hex.	P. 9-54

Precautions for Correct Use

- Identify the resonance frequency from the FFT function or other functions of the Sysmac Studio, and set the identified frequency in Frequency of the notch filter.
- If the adaptive notch filter is set, the objects for the specified notch filter are automatically set. If you want to set the objects for the notch filter manually, disable Adaptive Notch Filter.

11-10-2 Notch Filter Width and Depth

This section explains how to set width and depth of the notch filter.

Width Setting

Use Q-value to set the notch filter width. The relationship between Q-value, Cutoff Frequency (Fc), and Width (fw) is expressed as Q = Fc/fw. The lower the Q-value is, the wider the notch filter becomes.

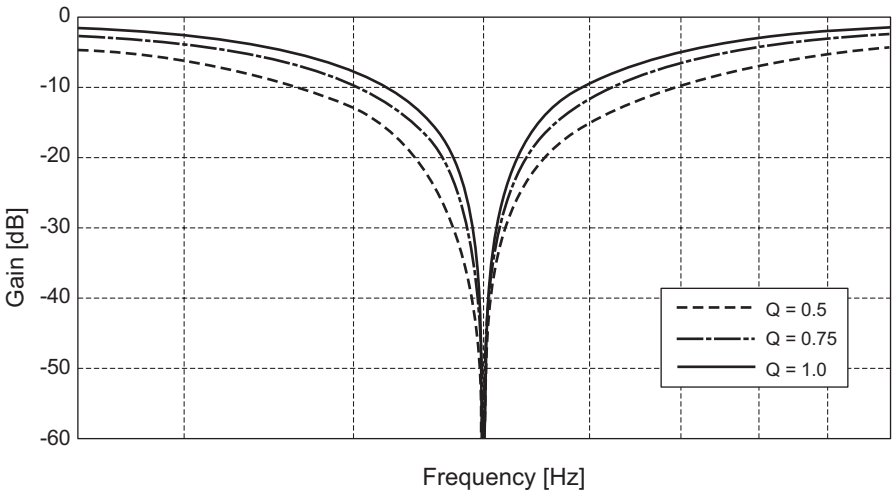

Depth Setting

Set the notch filter depth in damping ratio [dB]. The larger the value of damping ratio is, the deeper the notch filter becomes.

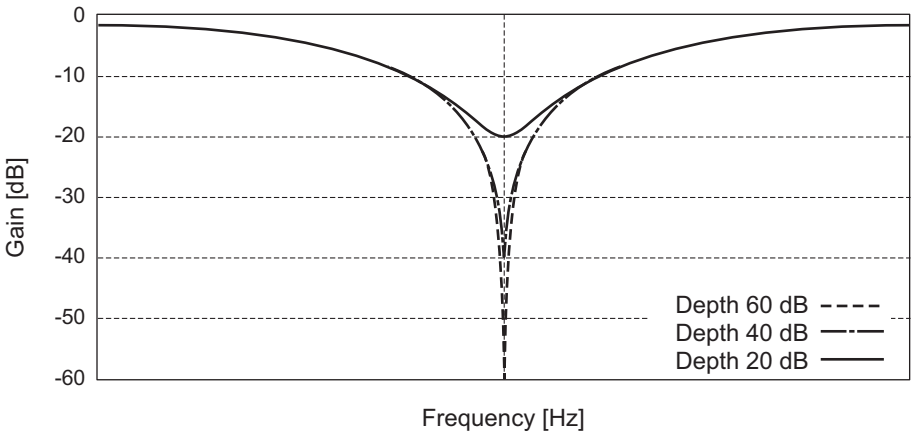

11-11 Friction Torque Compensation Function

You can set the following three types of friction torque compensations to reduce the influence of mechanical frictions.

- Unbalanced load compensation: Offsets the constantly applied unbalance torque
- Dynamic friction compensation: Compensates friction that changes its direction in accordance with the operating direction.
- Viscous friction compensation: Compensates friction that varies in accordance with velocity.

11-11-1 Operating Conditions

The friction torque compensation function is enabled under the following conditions.

- Position control or velocity control
- The Servo is ON.

The following table shows the relationship between the control method and enabled compensation functions.

Control method	Viscous friction compensation	Unbalanced load compensation	Dynamic friction compensation
TDF control	Enabled	Enabled	Enabled
ODF control	Disabled	Enabled	Enabled

11-11-2 Objects Requiring Settings

The friction torque compensation function needs the combined settings of the following four objects.

Index (hex)	Subindex (hex)	Name	Description	Reference
3310	---	Torque Compensation	Sets the torque compensation.	P. 9-44
	01	Viscous Friction Coefficient	Adjusts the amount of viscous friction compensation torque. This object is enabled only in two-degree-of-freedom (TDF) control.	P. 9-44
	02	Unbalanced Load Compensation	Sets the amount of unbalanced load torque compensation.	P. 9-44
	03	Positive Dynamic Friction Compensation	Sets the amount of dynamic friction compensation in the positive direction.	P. 9-44
	04	Negative Dynamic Friction Compensation	Sets the amount of dynamic friction compensation in the negative direction.	P. 9-45

Precautions for Correct Use

If the update selection of the Load Characteristic Estimation is set to *1*, the friction torque compensation is set automatically. If you want to set the torque compensation manually, set the update selection of Load Characteristic Estimation to *0*.

11-11-3 Operation Example

The friction torque compensation is applied according to the operation as shown in the drawing below.

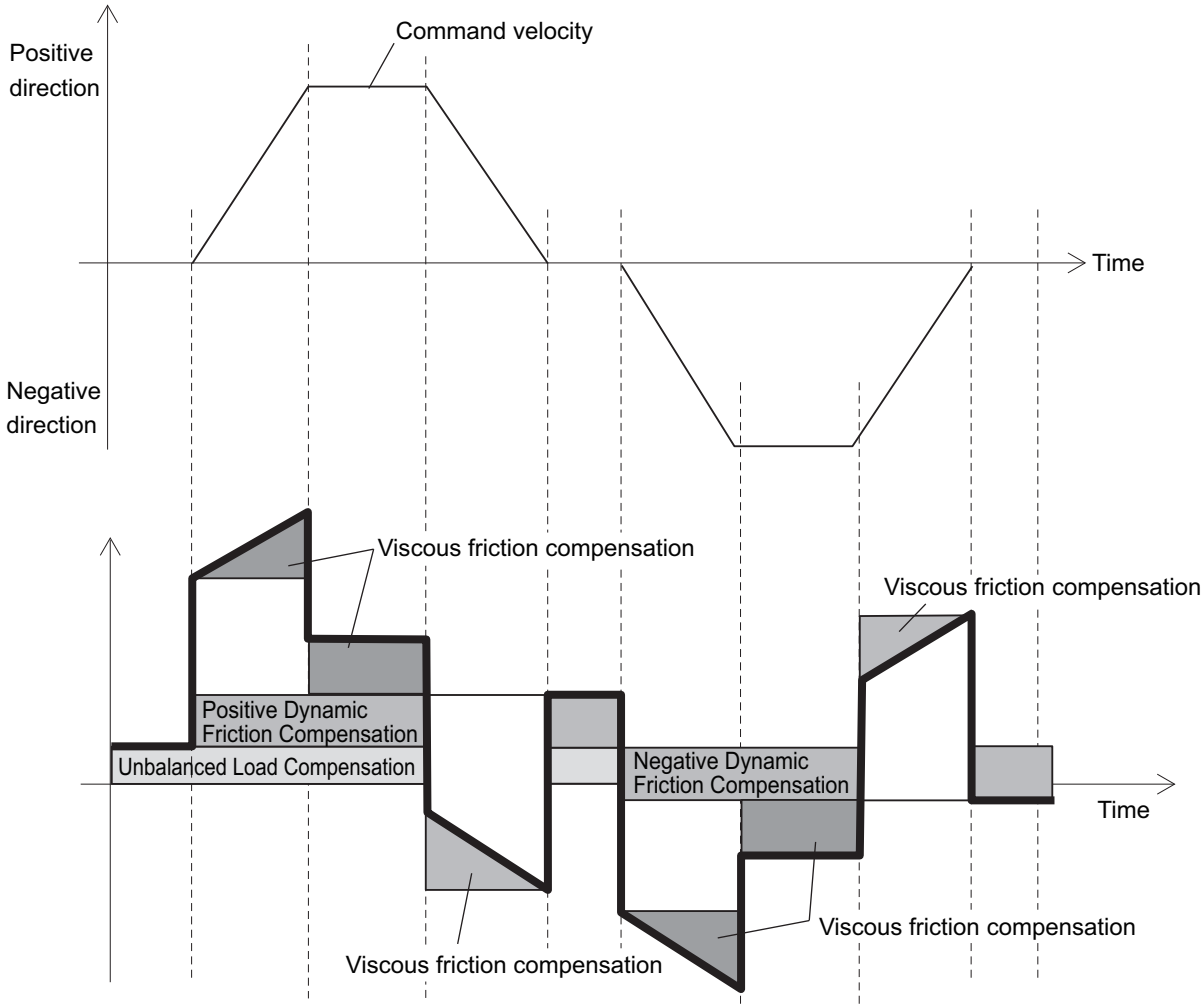

Note The dynamic friction compensation holds the compensation value until the command direction changes, in order to sustain the position during stabilization.

By setting the torque command value in **Unbalanced Load Compensation** (3310-02 hex), you can reduce the variations of positioning operations that occur depending on the movement directions. This object is useful when a constant amount of unbalanced load torque is always applied to the Servomotor at axes such as a vertical axis.

By setting the friction torque for each rotation direction in **Positive Dynamic Friction Compensation** (3310-03 hex) and **Negative Dynamic Friction Compensation** (3310-04 hex), you can reduce deterioration of and inconsistencies in the positioning stabilization time due to dynamic friction. These objects are useful for loads that require a larger amount of dynamic friction torque for a radial load, such as the belt-driven shaft.

Precautions for Correct Use

You can use Unbalanced Load Compensation and Dynamic Friction Compensation together or separately. Take note that the following use limit is applied depending on the operation mode switching or servo ON condition.

During torque control

The friction torque compensation is set to *0* regardless of the object setting.

When servo is ON in position control

The values of Unbalanced Load Compensation and Dynamic Friction Compensation are held until the position command is input.

11-12 Feed-forward Function

The feed-forward function is used to improve the following performance for the target position and velocity.

11-12-1 Feed-forward Control in TDF Control

In the normal TDF control, do not add **Velocity offset** (60B1 hex) and **Torque offset** (60B2 hex), because the optimized feed-forward amount is input from the TDF control section.

TDF Control-related Objects

The following are the feed-forward setting objects used in the TDF control.

Index (hex)	Subindex (hex)	Name	Description	Reference
3120	---	TDF Position Control	Sets the operation in the two-degree-of-freedom position control.	P. 9-31
	01	Command Following Gain	Sets the following performance for the target position. The higher the gain is, the higher the following performance of the internal command is for the target position.	P. 9-32
	10	Command Following Gain Selection	Selects the command following gain switching method. 0: Use the Command Following Gain. 1: Use the Command Following Gain 2.	P. 9-32
	11	Command Following Gain 2	Sets the cutoff frequency to the position command. The higher the set value is, the higher the following performance of the internal command is for the target position.	P. 9-32
3121	---	TDF Velocity Control	Sets the operation in the two-degree-of-freedom velocity control.	P. 9-32
	01	Command Following Gain	Sets the following performance for the target velocity. The higher the gain is, the higher the following performance of the internal command is for the target velocity.	P. 9-33
	10	Command Following Gain Selection	Selects the command following gain switching method. 0: Use the Command Following Gain. 1: Use the Command Following Gain 2.	P. 9-33
	11	Command Following Gain 2	Sets the cutoff frequency to the velocity command. The higher the set value is, the higher the following performance of the internal command is for the target velocity.	P. 9-33

Adjustment of TDF Command Following Gain

In the TDF control, the smooth internal commands are generated in the TDF control section so that rapid changes in target position or velocity do not cause overshooting. However, the smoother the internal commands are, the longer the delay of the internal commands gets. This trade-off between the overshooting suppression and internal command delay is adjusted with the command following gain.

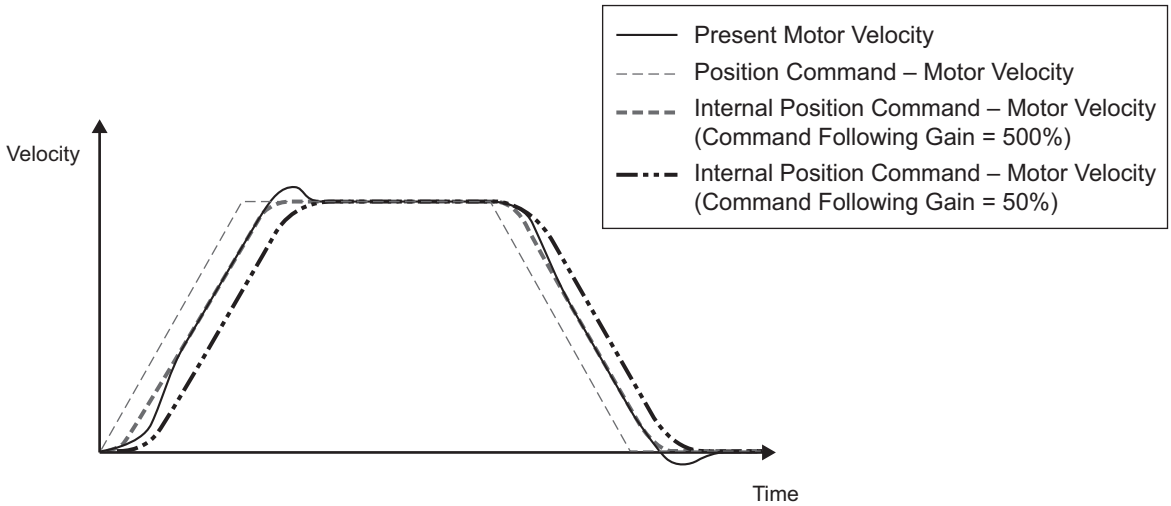

The smaller the set value of Command Following Gain is, the more the overshooting can be suppressed.

Normally, set Command Following Gain to 50%. Set a value of approximately 30% when you want to suppress overshooting.

11-12-2 Feed-forward Control in ODF Control

The feed-forward function that can be used in the ODF control comes in 2 types: velocity feed-forward and torque feed-forward. In the ODF control, the responsiveness can be increased by changing these feed-forward amounts.

ODF Control-related Objects

The following are the feed-forward setting objects used in the ODF control.

Index (hex)	Subindex (hex)	Name	Description	Reference
3112	---	ODF Velocity Feed-forward	Sets the velocity feed-forward in the one-degree-of-freedom control.	P. 9-29
	01	Gain	Sets the velocity feed-forward gain. Normally, use the default setting.	P. 9-29
	02	LPF Enable	Selects whether to enable or disable the low-pass filter in the velocity feed-forward. 0: Disabled 1: Enabled	P. 9-29
	03	LPF Cutoff Frequency	Sets the cutoff frequency for the feed-forward low-pass filter.	P. 9-29
3113	---	ODF Torque Feed-forward	Sets the torque feed-forward in the one-degree-of-freedom control.	P. 9-30
	01	Gain	Sets the torque feed-forward gain. Normally, use the default setting.	P. 9-30
	02	LPF Enable	Selects whether to enable or disable the low-pass filter in the torque feed-forward. 0: Disabled 1: Enabled	P. 9-31
	03	LPF Cutoff Frequency	Sets the cutoff frequency for the feed-forward low-pass filter.	P. 9-31

Operating Method of ODF Velocity Feed-forward

Increase the value of **ODF Velocity Feed-forward** – **Gain** (3112-01 hex) little by little to adjust the gain so that overshooting does not occur during acceleration/deceleration.

If you set **ODF Velocity Feed-forward - Gain** to 1,000 (100%), the calculated following error will be 0. However, large overshooting may occur during acceleration/deceleration.

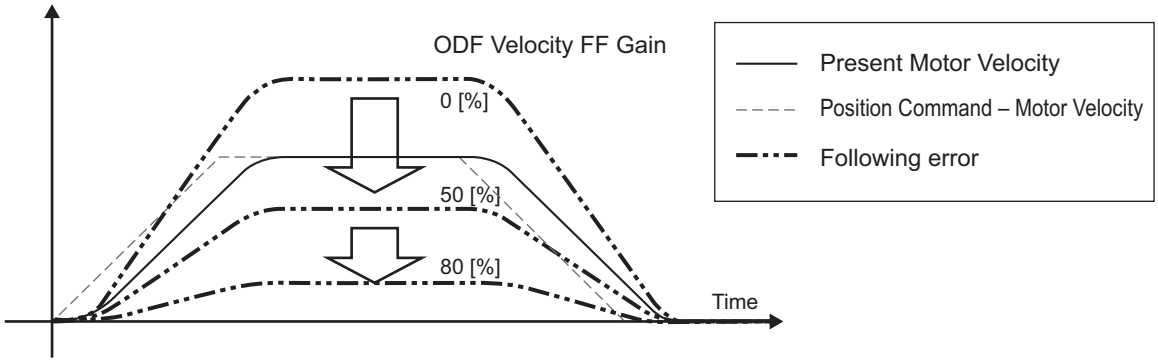

The following error in a constant velocity range gets smaller as you increase the velocity feed-forward gain.

Operating Method of ODF Torque Feed-forward

1 Set **Inertia Ratio** (3001-01 hex).

Set the inertia ratio as accurate as possible.

- If the inertia ratio is calculated when the Servomotor is selected, input the calculated value.
- If the inertia ratio is unknown, use the load characteristic estimation or easy tuning function to set the inertia ratio.

2 Adjust **ODF Torque Feed-forward - Gain** (3113-01 hex).

Increase value of **ODF Torque Feed-forward - Gain** (3113-01 hex) little by little.

Since the following error during constant acceleration/deceleration can be close to 0, it can be controlled almost to 0 throughout the entire operation range in a trapezoidal velocity pattern under ideal condition where no disturbance torque is applied.

In reality, disturbance torque is always applied and, therefore, the following error cannot be completely 0.

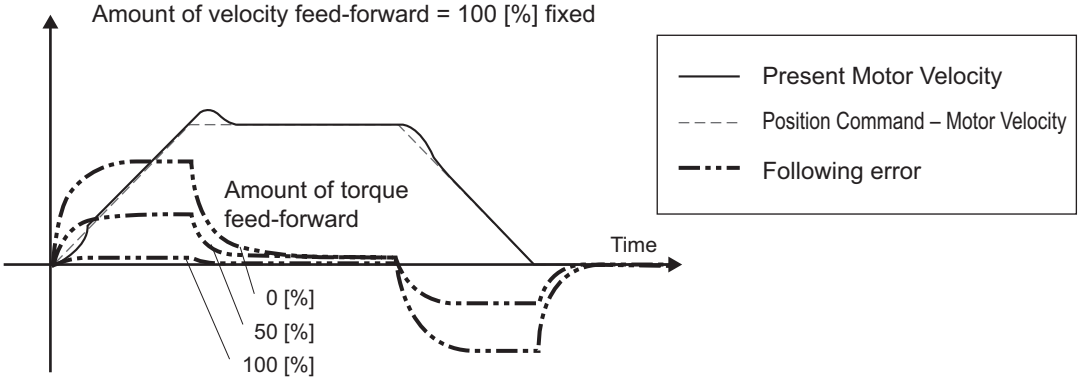

You can reduce the following error in a constant acceleration range by using the torque feed-forward.

12

Troubleshooting

This section explains the items to check when problems occur, and troubleshooting by the use of error displays or operation state.

12-1 Actions for Problems 12-2

12-1-1 Preliminary Checks When a Problem Occurs 12-2

12-1-2 Precautions When a Problem Occurs 12-3

12-1-3 Replacing the Servomotor or Servo Drive 12-4

12-2 Warnings 12-6

12-2-1 Related Objects 12-6

12-2-2 Warning List 12-8

12-3 Errors 12-10

12-3-1 Error List 12-10

12-3-2 Deceleration Stop Operation at Errors 12-13

12-4 Information 12-14

12-4-1 Related Objects 12-14

12-4-2 Information List 12-14

12-5 Troubleshooting 12-15

12-5-1 Troubleshooting Using Error Displays 12-16

12-5-2 Troubleshooting Using AL Status Codes 12-41

12-5-3 Troubleshooting Using the Operation State 12-45

12-1 Actions for Problems

If any problems should occur, take the following actions.

12-1-1 Preliminary Checks When a Problem Occurs

This section explains the preliminary checks required to determine the cause of a problem if one occurs.

Checking the Power Supply Voltage

Check the voltage at the power supply input terminals.

Input terminal	Model	Voltage
Main circuit power supply input (L1, L2, L3)	R88D-1SAN□H-ECT	Single-phase/3-phase 200 to 240 VAC (170 to 252 V)*1 50/60 Hz
	R88D-1SAN□F-ECT	3-phase 380 to 480 VAC (323 to 504 V)*1 50/60 Hz
Control Circuit Power Supply Input Terminals (24V, Ø or +24V, 0V)	---	24 VDC (21.6 to 26.4V)

*1. The values outside parentheses indicate the rated value, and the values inside parentheses indicate the range of acceptable variation. If the voltage is out of this range, operation failure may result. Be sure that the power supply is within the specified range.

Make sure that the power supply voltage for control input signals is within the range of 12 VDC-5% to 24 VDC+5%, and the power supply voltage for safety input signals is within the range of 24 VDC±5%. If the voltage is out of this range, operation failure may result. Be sure that the power supply is within the specified range.

Checking the Error Occurrence

Check whether an error exists by the use of the 7-segment LED display on the front of the Servo Drive or from the Sysmac Studio.

● When an Error Exists

Check the error display (□□) and make an analysis based on the error that is indicated.

Refer to *12-5-1 Troubleshooting Using Error Displays* on page 12-16.

● When an Error Does Not Exist

Make an analysis according to the error conditions.

Refer to *12-5-3 Troubleshooting Using the Operation State* on page 12-45.

The following figure shows the 7-segment display when an error exists.

- Error display and warning display
  The preset character, main code and sub code are displayed in turns.
  Example) Overvoltage Error: 1200 hex

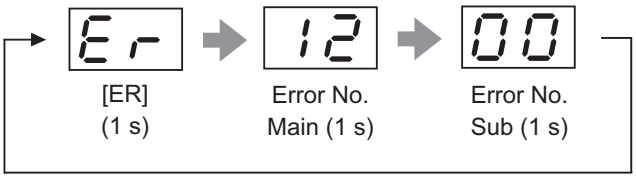

- Information display
  ST is displayed.
  Example) STO Detected: C000 hex

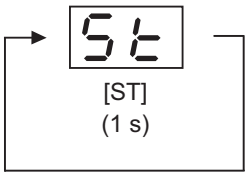

Numbers from 0 to F hex are displayed as follows.

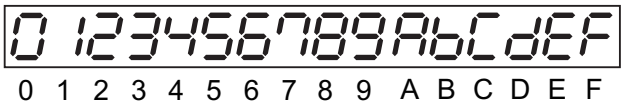

12-1-2 Precautions When a Problem Occurs

When you check and verify I/O after a problem occurred, the Servo Drive may suddenly start to operate or suddenly stop, so always take the following precautions.

You should assume that anything not described in this manual is not possible with this product.

Precautions

- Disconnect the wiring before checking for cable breakage. If you test conduction with the cable connected, test results may not be accurate due to conduction via bypassing circuit.
- If the encoder signal is lost, the Servomotor may run away, or an error may occur. Be sure to disconnect the Servomotor from mechanical systems before you check the encoder signal.
- When you perform tests, first check that there are no persons in the vicinity of the equipment, and that the equipment will not be damaged even if the Servomotor runs away.
  Before you perform the tests, verify that you can immediately stop the machine by the use of functions such as the immediate stop in case the machine runs out of control.

12-1-3 Replacing the Servomotor or Servo Drive

Use the following procedure to replace the Servomotor or Servo Drive.

Replacing the Servomotor

1 Replace the Servomotor.

2 Perform the Motor Setup.

- Turn ON the power supply to the Servo Drive. The Motor Replacement Detected (Error No. 95.05) occurs. Use the Sysmac Studio to clear the Motor Replacement Detected.
- When you use an absolute encoder, perform the Absolute Encoder Setup. Refer to *10-2-4 Absolute Encoder Setup* on page 10-7 for details.

3 In the position control, perform origin adjustment.

- When you replace the motor, the motor's origin position (phase Z) may deviate, so you must perform origin adjustment.
- Refer to the position controller's manual for details on performing origin adjustment.

Additional Information

With the Sysmac Studio, you can clear the Motor Operating Time retained by the Servo Drive.

Replacing the Servo Drive

1 Take a record of all object settings.

Use the Sysmac Studio to read all of the servo parameters in the Parameters tab page and save them in a file.

2 Replace the Servo Drive.

3 Set the objects.

Use the Sysmac Studio to write all of the servo parameters in the Parameters tab page.

4 Perform the Motor Setup.

- When the Motor Replacement Detected (Error No. 95.05) occurs on the Servo Drive, use the Sysmac Studio to clear the Motor Replacement Detected.

Precautions for Correct Use

- Confirm that the charge lamp is not lit before you perform replacement of the Servo Drive.
- Usually, it takes at least 10 minutes to discharge electricity.
- The models with a regeneration resistor can discharge electricity in a short period of time when there is no error in its circuits and the main circuit power supply is cut off while the control power supply is ON.

Clearing Motor Replacement Detected

1. Start the Sysmac Studio and go online with the Servo Drive via EtherCAT or USB communications.
2. In the Sysmac Studio, right-click the target Servo Drive under **Configurations and Setup**, and select **Motor and Encoder.**
3. Click the **Reset Motor Replacement Detection error** button in the Encoder Properties pane.
4. Execute the Unit Restart or turn the control power supply to the Servo Drive OFF and then ON again.

12-2 Warnings

This function outputs a warning signal to enable you to check a state such as an overload before an error occurs.

With **Warning Customization** (4020 hex), you can select whether or not to detect warnings and whether or not to hold the warning state. Also, you can set this object to be notified of warnings as errors.

If **Warning Customization - Warning Hold Selection** (4020-04 hex) is set to a **not hold**, a warning is cleared automatically when the cause of warning is eliminated. If it is set to a **hold**, perform the normal procedure to clear errors after you remove the cause of the error.

12-2-1 Related Objects

Index (hex)	Subindex (hex)	Name	Description	Reference
4020	---	Warning Customization	Sets the warning detection function.	P. 9-82
	01	Warning Mask 1 Selection	When a bit is set to 1, the detection of the corresponding warning is disabled. bit 0: Overload Warning bit 1: Regeneration Overload Warning bit 3: Motor Vibration Warning bit 4: Capacitor Lifetime Warning bit 5: Inrush Current Prevention Relay Lifetime Warning bit 9: Lifetime Information Corruption Warning bit 10: Encoder Lifetime Warning bit 11: Fan Rotation Warning bit 12: Absolute Encoder Counter Overflow Warning bit 13: Safety Relay Lifetime Warning	P. 9-82
	03	Warning Mask 3 Selection	When a bit is set to 1, the detection of the corresponding warning is disabled. bit 0: Data Setting Warning bit 1: Command Warning bit 2: EtherCAT Communications Warning	P. 9-82

Index (hex)	Subindex (hex)	Name	Description	Reference
4020	04	Warning Hold Selection	Selects whether to hold or not the warning state. Bit 0: 0: Not hold the warning enabled in Warning Mask 1 Selection. The warning is automatically cleared when the cause of the warning is eliminated. However, the warning is held for at least 1 second. 1: Hold the warning enabled in Warning Mask 1 Selection. After the cause of the warning is eliminated, the error reset command must be sent. Bit 2: 0: Not hold the warning enabled in Warning Mask 3 Selection. The warning is automatically cleared when the cause of the warning is eliminated. However, the warning is held for at least 1 second. 1: Hold the warning enabled in Warning Mask 3 Selection. After the cause of the warning is eliminated, the error reset command must be sent.	P. 9-83
	05	Warning Level Change 1 Selection	When a bit is set to 1, the level of the corresponding warning is set as the error. bit 0: Overload Warning bit 1: Regeneration Overload Warning bit 3: Motor Vibration Warning bit 4: Capacitor Lifetime Warning bit 5: Inrush Current Prevention Relay Lifetime Warning bit 9: Lifetime Information Corruption Warning bit 10: Encoder Lifetime Warning bit 11: Fan Rotation Warning bit 12: Absolute Encoder Counter Overflow Warning bit 13: Safety Relay Lifetime Warning	P. 9-83
	07	Warning Level Change 3 Selection	When a bit is set to 1, the level of the corresponding warning is set as the error. bit 0: Data Setting Warning bit 1: Command Warning bit 2: EtherCAT Communications Warning	P. 9-83

12-2-2 Warning List

General Warnings

Error No.		Warning name	Warning condition	Warning Mask 1 Selection*1 (4020-01 hex) Warning Level Change 1 Selection (4020-05 hex) corresponding bit
Main (hex)	Sub (hex)			
A0	00	Overload Warning	The load ratio of Servo Drive or motor (4150-81 hex) exceeded the level set in **Overload** - **Warning Notification Level** (4150-01 hex).	Bit 0
A1	00	Regeneration Overload Warning	The Regeneration Load Ratio (4310-81 hex) exceeded 85% of the regeneration overload ratio.	Bit 1
A3	00	Fan Rotation Warning	The rotation speed of the fan is 80% or less of the rating and the cooling performance decreases.	Bit 11
A6	00	Motor Vibration Warning	The motor vibration, which was higher than or equal to the level set in the **Vibration Detection** - **Detection Level** (3B70-01 hex), was detected.	Bit 3
A7	01	Capacitor Lifetime Warning	The capacitor built into the Servo Drive reached the service life of the manufacturer's guarantee.	Bit 4
	02	Inrush Current Prevention Relay Lifetime Warning	The inrush current prevention relay built into the Servo Drive reached the service life of the manufacturer's guarantee.	Bit 5
	05	Lifetime Information Corruption Warning	An error was detected in the saved lifetime information.	Bit 9
	06	Encoder Lifetime Warning	The encoder lifetime is close to the end.	Bit 10
	0C	Safety Relay Lifetime Warning	A safety relay for SBC reached the lifetime counting.	Bit 13
AB	00	Absolute Encoder Counter Overflow Warning	The multi-rotation counter of the encoder exceeded the value set in **Encoder** - **Absolute Encoder Counter Overflow Warning Level** (4510-02 hex).	Bit 12

*1. For Warning Mask 1 Selection, when a bit is set to 1, the detection of the corresponding warning is disabled.

Precautions for Correct Use

You can clear these warnings by executing the error reset command. The command does clear the warning even if the cause of the warning is not removed, but the same warning will occur again.

EtherCAT Communications Warning

Error No.		Warning name	Warning condition	Warning Mask 3 Selection*1 (4020-03 hex), Warning Level Change 3 Selection (4020-07 hex) corresponding bit
Main (hex)	Sub (hex)			
B0	00	Data Setting Warning	The object set value is out of the range.	Bit 0
B1	00	Command Warning	A command could not be executed.	Bit 1
B2	00	EtherCAT Communications Warning*2	An EtherCAT communications error occurred more than one time.	Bit 2

*1. For Warning Mask 3 Selection, when a bit is set to *1*, the detection of the corresponding warning is disabled.

*2. This warning also occurs when the power supply to the master unit is turned OFF after EtherCAT communication establishment. For this reason, a warning may be recorded in the error history if the power supply to the 1S-series Servo Drive is turned OFF immediately after the power supply to the master unit is turned OFF.

12-3 Errors

If the Servo Drive detects an abnormality, it outputs an error (/ERR), turns OFF the power drive circuit, and displays the error number (main and sub) on the front panel.

Precautions for Correct Use

- Refer to *12-5-1 Troubleshooting Using Error Displays* on page 12-16 for information on troubleshooting.
- You can reset the error by turning OFF the power supply and then ON again, or executing the error reset command via EtherCAT communications or on the Sysmac Studio. Be sure to remove the cause of the error first.
- Some errors are reset only by turning the power supply OFF then ON again. For details, refer to *12-3-1 Error List* on page 12-10.
- If nothing is displayed on the 7-segment display even when the control power supply is ON, it indicates that the internal MPU is malfunctioning. If you find this symptom, cut off the power supply immediately.

12-3-1 Error List

Error No.		Error name	Attribute	
Main (hex)	Sub (hex)		Can be reset*1	Deceleration operation*2
12	00	Overvoltage Error	---	B
13	00	Main Power Supply Undervoltage (insufficient voltage between P and N)	Yes	B
	01	Main Circuit Power Supply Phase Loss Error	Yes	B
14	00	Overcurrent Error	---	B
	01	Power Module Error	---	B
	03	Inrush Current Prevention Circuit Error	---	B
15	00	Servo Drive Overheat	Yes	B
	03	Motor Temperature Error	Yes	B
16	00	Overload Error	Yes	B
18	00	Regeneration Overload Error	---	B
	01	Regeneration Circuit Error	---	B
	02	Regeneration Processing Error	---	B
20	00	Runaway Detected	---	B
21	00	Encoder Communications Disconnection Error	---	B
	01	Encoder Communications Error	---	B
	04	Encoder Error	---	B
	05	Encoder power supply Error	---	B
24	00	Excessive Position Deviation Error	Yes	A
	01	Excessive Speed Deviation Error	Yes	A
26	00	Excessive Speed Error	Yes	A
27	01	Absolute Value Cleared	---	B
28	00	Pulse Output Overspeed Error	Yes	A
	01	Pulse Output Setting Error	---	A
29	03	Following Error Counter Overflow	---	B
33	00	General Input Allocation Duplicate Error	---	A
	09	General Output Allocation Duplicate Error	---	A
34	01	Software Limit Exceeded	Yes	A

Error No.		Error name	Attribute	
Main (hex)	Sub (hex)		Can be reset*1	Deceleration operation*2
35	00	FPGA WDT Error	---	B
	01	System Error	---	B
	02	Self-diagnosis Error	---	B
	07	Encoder Self-diagnosis Error	---	B
36	00	Non-volatile Memory Data Error	---	A
37	00	Non-volatile Memory Hardware Error	---	A
38	00	Drive Prohibition Input Error	Yes	A
	01	Drive Prohibition Detected	Yes	A
41	00	Absolute Encoder Counter Overflow Error	---	A
43	01	Encoder Memory Error	---	B
44	00	1-rotation Counter Error	---	B
45	00	Absolute Encoder Multi-rotation Counter Error	---	B
	01	Absolute Position Detection Error	---	B
47	00	Overspeed Error	---	B
58	00	Main Circuit Temperature Monitoring Circuit Failure	---	B
59	00	Fan Error	Yes	A
62	00	Control Right Release Error	Yes	A
70	00	Safety Parameter Error	Yes	A
	01	Safety Communications Setting Error	Yes	A
	02	FSoE Slave Address Error	Yes	A
	03	Safety Frame Error	Yes	A
	04	Safety Communications Timeout	Yes	A
71	00	Safety Function Setting Error	Yes	B
	01	SOPT Input Monitoring Error	Yes	B
	02	Safety Function Error	Yes	B
	03	Excessive limit value error	Yes	B
	04	Discrepancy Error at SF Input	Yes	B
	05	SBC Relay Diagnosis Error	Yes	B
	06	External Test Signal Failure at SOPT Input	Yes	B
	07	Overload Detected at Test Output	Yes	B
	08	Stuck-at-high Detected at Test Output	Yes	B
	09	Overload Detected at SBC Output	Yes	B
	10	Stuck-at-high Detected at SBC Output	Yes	B
	11	IOV Power Supply Voltage Error	Yes	B
	12	SBC Power Supply Voltage Error	Yes	B
	13	Internal Circuit Error at SF Input	---	B
	14	Internal Circuit Error at SOPT Input	---	B
	15	Internal Circuit Error at Test Output	---	B
	16	Internal Circuit Error at SBC Output	---	B
83	01	EtherCAT State Change Error	Yes	A
	02	EtherCAT Illegal State Change Error	Yes	A
	03	Communications Synchronization Error	Yes	A
	04	Synchronization Error	Yes	A
	05	Sync Manager WDT Error	Yes	A
	06	Bootstrap State Transition Request Error	Yes	A
87	00	Error Stop Input	Yes	A
88	01	ESC Initialization Error	---	A
	02	Synchronization Interruption Error	---	A
	03	SII Verification Error	---	A
	04	ESC Error	---	A

Error No.		Error name	Attribute	
Main (hex)	Sub (hex)		Can be reset*1	Deceleration operation*2
90	00	Mailbox Setting Error	Yes	A
	01	PDO WDT Setting Error	Yes	A
	02	SM Event Mode Setting Error	Yes	A
	03	DC Setting Error	Yes	A
	04	Synchronization Cycle Setting Error	Yes	A
	05	RxPDO Setting Error	Yes	A
	06	TxPDO Setting Error	Yes	A
	07	RxPDO Mapping Error	Yes	A
	08	TxPDO Mapping Error	Yes	A
	09	Node Address Updated	---	A
91	01	Command Error	Yes	A
93	00	Electronic Gear Setting Error	---	A
94	00	Function Setting Error	Yes	A
95	01	Motor Non-conformity	---	A
	05	Motor Replacement Detected	---	A
97	00	Brake Interlock Error	Yes	A

*1. “Yes” means that you can clear the error by executing the error reset command. The mark “---” means that you need to cycle the power supply or execute **Unit Restart** (2400 hex) to clear the error.

*2. The deceleration operation shows the operation (*Operation A* or *Operation B*) that is used when **Fault reaction option code** (605E hex) is set to *-4* to *-7*.

12-3-2 Deceleration Stop Operation at Errors

The deceleration stop function controls the motor and decelerates it to stop if an error that causes the deceleration stop occurs.

Related Objects

Index (hex)	Subindex (hex)	Name	Description	Reference
605E	00	Fault reaction option code	Sets the state during deceleration and after stopping for when an error occurs.	P. A-45
3B21	---	Deceleration Stop	Sets the torque for deceleration stop.	P. 9-66
	01	Torque	Sets the torque limit value during deceleration stop.	P. 9-66

Deceleration Stop Operation

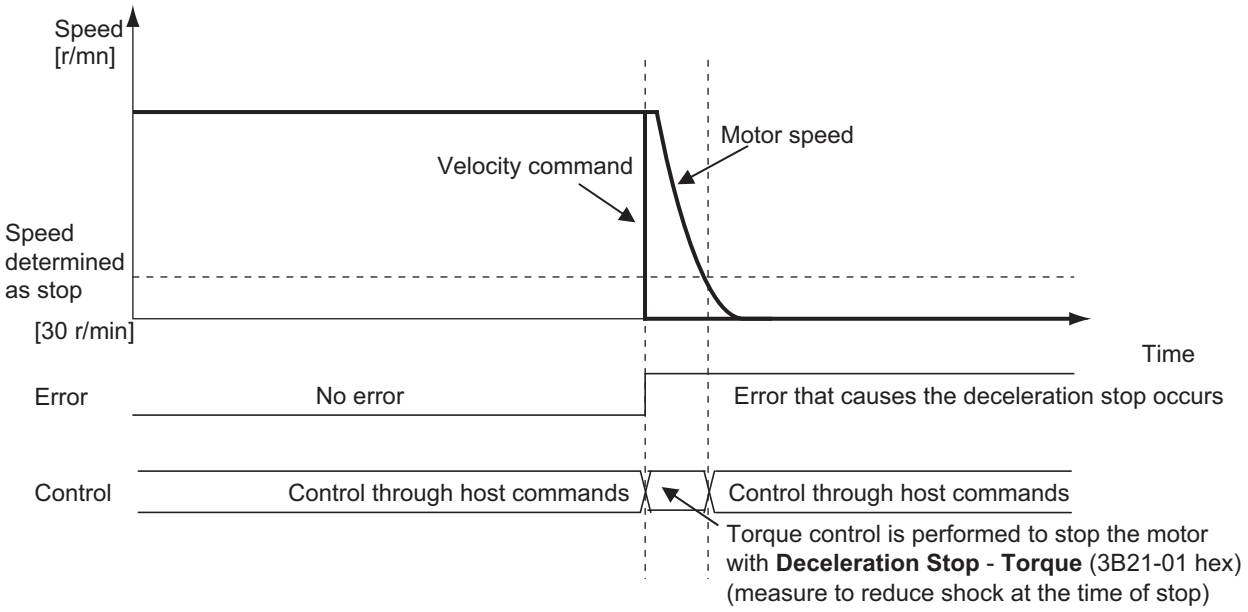

12-4 Information

Information is an event other than errors of which you are notified.

You can change information to errors by changing its level.

12-4-1 Related Objects

Index (hex)	Subindex (hex)	Name	Description	Reference
4030	---	Information Customization	Sets the information.	P. 9-86
	01	Information Level Change Selection	Sets the level change of information. When a bit is set to 1, the level of the corresponding information is set as the error. Bit 0: STO	P. 9-86

12-4-2 Information List

Error No.		Information name	Condition	Information Level Change Selection*1 (4030-01 hex)
Main (hex)	Sub (hex)			
C0*2	00	STO Detected	The safety input OFF state was detected via the safety input signal or EtherCAT communications.	Bit 0

*1. For **Information Level Change Selection**, when a bit is set to *1*, the level of the corresponding information is set as the error.

*2. When a level corresponds to the information, ST is displayed on the 7-segment LED. If you change the level of the corresponding information to an error, Er C0 00 will be displayed.

12-5 Troubleshooting

If an error occurs in the Servo Drive or operation, identify the cause of the error and take appropriate measures as shown below.

- For the error occurrence, check its frequency, timing, and the environment in which the error occurred.
- You can reduce errors that occur temporarily by taking noise countermeasures such as wiring a thick ground wire as short as possible.
- For details on noise countermeasures, refer to *4-3 Wiring Conforming to EMC Directives* on page 4-33.

12-5-1 Troubleshooting Using Error Displays

When an error or warning occurs, the error number is displayed on the 7-segment LED display the front of the Servo Drive.

Error List

Error No.		Name	Cause		Measures
Main (hex)	Sub (hex)				
12	00	Overvoltage Error	The main circuit power supply voltage (P-N voltage) exceeded the operation guarantee range.	The P-N voltage exceeded the specified value.	Keep the applied main circuit power supply voltage within the specified range.
				The input voltage increased.	Use appropriately external devices such as UPS.
				The Regeneration Resistor wiring is broken.	If a resistance value of the external resistor is infinite between the terminal B1 and B2 of the Servo Drive, the wiring is broken. Replace the external resistor.
				The External Regeneration Resistor is set or selected inappropriately.	Confirm the necessary regeneration processing capacity, and connect an appropriate External Regeneration Resistor. Also, set the parameters of the External Regeneration Resistor to the resistance value of the External Regeneration Resistor in use.
				Noise of the Servo Drives during Servo ON was conveyed around the other Servo Drives during Servo OFF. As a result of that, P-N voltage increased.	• Do NOT bundle integrated cables when several Servo Drives are used. • Carry out a wiring so that the inductance of the main circuit power supply cables are smaller. • You can find effect of improvement once a noise filter is set to the power line. Use one noise filter for each Servo Drive. Refer to *4-7 Noise Filter Installation Conditions When the Total Wire Length Is Long* on page 4-51 when you connect more than one Servo Drive to one noise filter. When doing so, make sure to connect all Servo Drives to the power supply through the noise filter. • You can secure the effect of improvement when you install an external regeneration resistor to the Servo Drives that are NOT built in a regeneration resistor.

Error No.		Name	Cause		Measures
Main (hex)	Sub (hex)				
12	00	Overvoltage Error	The main circuit power supply voltage (P-N voltage) exceeded the operation guarantee range.	Servo Drive failure	If this event occurs again after you performed all corrections shown above, replace the Servo Drive.
13	00	Main Power Supply Undervoltage (insufficient voltage between P and N)	The main circuit power supply voltage fell below the operation guarantee range during Servo ON.	Incorrect wiring of the main circuit power supply	If the power supply cables are not wired to the main circuit power supply terminals (L1 , L2 , L3), connect them.
				The low power supply voltage is applied to the Servo Drive.	Increase the power supply capacity if it is small. Measure the applied power supply voltage, and apply the voltage according to the specification.
				The long time was set in Momentary Hold Time and the voltage was decreased momentarily.	Remove the cause that momentarily decreased the voltage. Set a short time in the Momentary Hold Time so as not to detect this error due to a momentary decrease in voltage. There is a possibility that an inrush current prevention circuit of the Servo Drives has a failure.
				Servo Drive failure	If this event occurs again after you performed all corrections shown above, replace the Servo Drive.
	01	Main Circuit Power Supply Phase Loss Error	The phase loss of the main circuit power supply was detected.	Incorrect wiring, for example the single-phase power supply is input to a 3-phase input type Servo Drive.	Confirm the Servo Drive specifications, and perform the correct wiring.
				In the case where the single-phase power supply is input to a single- and 3-phase input type Servo Drive, the phase loss detection is enabled.	Set **Main Circuit Power Supply - Phase Loss Detection Enable** (4320-02 hex) to 0 (disabled).
				The power supply voltage is low or insufficient.	Improve power supply conditions by increasing the power supply capacity or the like.
				Broken wiring of the main circuit power supply input	Replace the main circuit power supply input cable.
				Servo Drive failure	If this event occurs again after you performed all corrections shown above, replace the Servo Drive.

Error No. Main (hex)	Error No. Sub (hex)	Name	Cause		Measures
14	00	Overcurrent Error	The current flowing to the motor exceeded the protection level.	There is a short circuit, ground fault, contact failure, disconnection, or break on the U, V, or W motor cable.	Correct the connection of the U, V, or W motor cable. If the cable is broken, replace it.
				There is a short circuit on the wiring of External Regeneration Resistor.	Correct the wiring of External Regeneration Resistor.
				The insulation resistance failed between the U, V, or W motor cable and the motor ground wire.	Replace the motor.
				False detection due to the noise	Take noise countermeasures.
				Servo Drive failure	If this event occurs again after you performed all corrections shown above, replace the Servo Drive.
	01	Power Module Error	An error was detected in the power module.	There is a short circuit, ground fault, or contact failure on the U, V, or W motor cable.	Correct the connection of the U, V, or W motor cable.
				There is a short circuit on the wiring of External Regeneration Resistor, or the value of resistance became too small.	If there is a short-circuit on the wiring of External Regeneration Resistor, correct the wiring.
				The insulation resistance failed between the U, V, or W motor cable and the motor ground wire.	Replace the motor.
				Servo Drive failure	If this event occurs again after you performed all corrections shown above, replace the Servo Drive.
	03	Inrush Current Prevention Circuit Error	An error of inrush current prevention circuit was detected.	Servo Drive failure	If this event occurs again, replace the Servo Drive.
15	00	Servo Drive Overheat	The internal temperature of Servo Drive exceeded the circuit protection level.	The ambient temperature of the Servo Drive exceeded the specified value.	Improve the ambient temperature and the cooling conditions of the Servo Drive.
				Overload	Increase the setting of the acceleration/deceleration time or stopping time to lighten the load. Or, increase the capacities of the Servo Drive and the motor.
	03	Motor Temperature Error	The encoder detected the temperature that exceeded the protection level of motor.	The temperature around the motor is not operating temperature.	Adjust the temperature around the motor to be within the range of the operating temperature.
				The motor is overloaded.	Adjust the motor load ratio within the specified range.
				Encoder failure	Replace the motor if this event occurs repeatedly.

Error No.		Name	Cause		Measures
Main (hex)	Sub (hex)				
16	00	Overload Error	The load ratio of Servo Drive or Servomotor exceeded 100%.	Operation was continued for a long time with high load.	Take the following actions according to conditions. • Increase the set value of the acceleration/deceleration time or the stop time. • Lighten the load. • Adjust the gain or inertia ratio. • If torque waveforms oscillate excessively, adjust the system by the tuning so that the oscillation does not occur. • Set the appropriate brake timing. • Increase the capacities of the Servo Drive and the motor.
				There is incorrect wiring of the motor cable or a broken cable.	• Connect the motor cable as shown in the wiring diagram. If the cable is broken, replace it. Or, connect the motor cable and encoder cable that are used together to the same motor. • Measure the voltage at the brake terminal. If the brake is applied, release it.
				Increase in friction	Check machine conditions and remove the cause of the friction.
18	00	Regeneration Overload Error	The Regeneration Load Ratio exceeded the regeneration overload ratio.	The regeneration processing is set inappropriately.	Check the regeneration processing setting, and set the same value as the resistance value of the Regeneration Resistor in use.
				The Regeneration Resistor is selected inappropriately.	Check the operation pattern by the velocity monitor. Check the load ratio of Regeneration Resistor, and perform the following corrections accordingly. • Increase the deceleration time and stopping time. • Decrease the command velocity to the motor. • Use an External Regeneration Resistor. • Increase the capacities of the Servo Drive and the motor.
				The Regeneration Resistor is used for continuous regenerative braking.	The Regeneration Resistor cannot be used for continuous regenerative braking.
				The applied power supply voltage is higher than the specified value.	Apply the specified power supply voltage.
				Regeneration Resistor failure	Check whether the Regeneration Resistor is faulty, and use one without failures.

Error No.		Name	Cause		Measures
Main (hex)	Sub (hex)				
18	01	Regeneration Circuit Error	Error of regeneration circuit of Servo Drive was detected.	A short-circuit between B2 and N2/N3.	Confirm connections with peripheral devices and carry out wirings correctly.
				A failure of regeneration circuit of Servo Drives.	Replace the Servo Drive.
				Noise to wiring of external regeneration resistance.	Take measures against noise such as shortening a wire length, etc.
	02	Regeneration Processing Error	The regeneration processing was stopped to protect the Regeneration Resistor. This error occurs when the regeneration processing continues for 500 ms or more.	The regeneration processing is set inappropriately.	Check the regeneration processing setting, and set the same value as the resistance value of the Regeneration Resistor in use.
				The Regeneration Resistor is selected inappropriately.	Check the operation pattern by the velocity monitor. Check the load ratio of Regeneration Resistor, and perform the following corrections accordingly. • Increase the deceleration time and stopping time. • Decrease the command velocity to the motor. • Use an External Regeneration Resistor. • Increase the capacities of the Servo Drive and the motor.
				The Regeneration Resistor is used for continuous regenerative braking.	The Regeneration Resistor cannot be used for continuous regenerative braking.
				The applied power supply voltage is higher than the specified value.	Apply the specified power supply voltage.
				Regeneration Resistor failure	Check whether the Regeneration Resistor is faulty, and use one without failures.
20	00	Runaway Detected	The motor rotated in the direction opposite to the command.	There is incorrect wiring of the motor cable or a broken cable.	Connect the motor cable as shown in the wiring diagram. If the cable is broken, replace it. Or, connect the motor cable and encoder cable that are used together to the same motor.
				The motor rotated in the direction opposite to the command by external forces.	Take countermeasures so that the motor is not subjected to external forces. Set **Runaway Detection - Enable** (3B71-01 hex) to 0 (disabled) when the motor runs as intended.

Error No. Main (hex)	Error No. Sub (hex)	Name	Cause		Measures
21	04	Encoder Error	The communication error was detected between the encoder and the Servo Drive.	Noise into the encoder or the integrated cable.	• Carry out correct wiring after check of specified connection for the integrated cable and a shield clamp. • Use a standard integrated cable.
				Hardware failure from mechanical impact, and fault of power supply to the encoder.	If this event occurs repeatedly after you cycled the power supply, replace the Motor because the encoder is faulty.
				Contact failure of the signal line, and No connection to the integrated cable.	Replace the integrated cable if it is disconnected. Firmly connect the integrated cable to the Servo Drive.
				Encoder failure	If this event occurs after you performed the corrections above, replace the motor.
	05	Encoder power supply Error	Encoder power supply error was detected.	Noise into the encoder cable	• Carry out correct wiring after check of e specified connection for integrated cable and a shield clamp. • Use a standard integrated cable.
				Contact failure of the signal line, and disconnection of the encoder	
				Power supply undervoltage to the encoder	
				Encoder failure	If errors occur after you take measures mentioned above, replace the motor.
24	00	Excessive Position Deviation Error	The position deviation is greater than or equal to the value set in the Following error window.	The motor operation does not follow the command.	Identify and remove a cause that limits the motor operation. During the acceleration/deceleration, the command may not be followed depending on operation patterns. In that case, adjust the gain, increase the acceleration/deceleration time or the like.
				The value of Following error window is small.	Increase the setting of the Following error window to an acceptable range.
	01	Excessive Speed Deviation Error	The speed deviation is greater than or equal to the value set in the Excessive Velocity Deviation Detection Level.	The motor operation does not follow the command because a parameter value is inappropriate.	Adjust the gain to improve the following ability. Or, increase the acceleration/deceleration time for the internal position command velocity.
				The output axis of motor is limited on the operation by external forces.	Take countermeasures so that the output axis is not limited on the operation by external forces.
				The value of the Excessive Velocity Deviation Detection Level is inappropriate.	Increase the setting of the Excessive Velocity Deviation Detection Level to an acceptable range. Disable the Excessive Velocity Deviation Detection if it is unnecessary to monitor the velocity deviation.

Error No.		Name	Cause		Measures
Main (hex)	Sub (hex)				
26	00	Excessive Speed Error	The feedback motor speed is greater than or equal to the value set in the Excessive Speed Detection Level.	The velocity command value is too large.	Do not give the excessive velocity command. Check whether the electronic gear ratio is set correctly.
				Overshooting occurred.	If overshooting occurred due to faulty gain adjustment, adjust the gain.
				The motor is rotated by external forces.	Check whether the motor is rotated by external forces.
27	01	Absolute Value Cleared	The multi-rotation counter of the absolute encoder was cleared.		This operation is performed for safety and is not an error.
28	00	Pulse Output Overspeed Error	The speed, which exceeded the frequency that could be output by the Encoder Dividing Pulse Output function, was detected.	The dividing ratio setting is inappropriate for the actual usage condition.	Correct the setting of Encoder Dividing Pulse Output - Dividing Denominator and Dividing Numerator.
	01	Pulse Output Setting Error	The dividing numerator exceeded the dividing denominator when the Encoder Dividing Pulse Output - Dividing Denominator was set to a value other than 0.		Correct the setting of Encoder Dividing Pulse Output - Dividing Denominator and Dividing Numerator.
29	03	Following Error Counter Overflow	The following error value exceeded the range from -2,147,483,648 to 2,147,483,647.	The motor operation does not follow the command.	Identify and remove a cause that limits the motor operation. During the acceleration/deceleration, the command may not be followed depending on operation patterns. In that case, change the operation pattern by increasing the acceleration/deceleration time or the like.
				The motor is rotated or limited on the operation by external forces.	Take countermeasures so that the motor is not subjected to external forces.
33	00	General Input Allocation Duplicate Error	More than one function input is allocated to one general input.		Correct the duplicate general input allocation.
	09	General Output Allocation Duplicate Error	More than one function output is allocated to one general output.		Correct the duplicate general output allocation.

Error No. Main (hex)	Error No. Sub (hex)	Name	Cause		Measures
34	01	Software Limit Exceeded	The Position actual value detected the position that exceeded the value set in the Software Position Limit, and stopped the operation according to the user setting.	Incorrect setting of Software Position Limit	Correct the setting of Software Position Limit.
				When the Software Position Limit - Stop Selection was set to a *Stop according to the setting of Fault reaction option code*, the position exceeded the value set in the Software Position Limit.	Set the command value to be within the range of Software Position Limit.
35	00	FPGA WDT Error	An FPGA error was detected.	False detection due to a data read error that was caused by excessive noise	If this event does not occur after you cycled the power supply, use the product continuously. It is supposed that a temporary error occurred due to a read error. If this event occurs again, the hardware is faulty. Replace the Servo Drive.
				Hardware failure	
	01	System Error	A hardware error due to the self-diagnosis and a fatal software error were detected.	False detection due to a data read error that was caused by excessive noise	If this event does not occur after you cycled the power supply, use the product continuously. It is supposed that a temporary error occurred due to a read error. If this event occurs again, a fatal error exists. Replace the Servo Drive.
				A fatal software error was detected.	
				Hardware failure	
	02	Self-diagnosis Error	An error was detected by the self-diagnosis of the safety function.	False detection due to a data read error that was caused by excessive noise	If this event does not occur after you cycled the power supply, use the product continuously. It is supposed that a temporary error occurred due to a read error. If this event occurs again, replace the Servo Drive.
				Hardware failure	
	07	Encoder Self-diagnosis Error	An error was detected by the self-diagnosis of the encoder.	False detection due to a data read error that was caused by excessive noise	When this event occurs repeatedly even if you cycle the power supply, replace the Motor.
				Encoder failure	
36	00	Non-volatile Memory Data Error	An error of data saved in the non-volatile memory was detected.	Power interruption or noise occurred while parameters other than the safety were saved	Save data after setting the parameter again, and cycle the power supply.
				Power interruption or noise occurred while the motor identity information was saved	Execute Motor Setup, and cycle the power supply.
				Power interruption or noise occurred while safety parameters were saved	Clear the FSoE slave address, execute FSoE Enable Reset, and cycle the power supply.

Error No.		Name	Cause		Measures
Main (hex)	Sub (hex)				
37	00	Non-volatile Memory Hardware Error	An error occurred on the non-volatile memory.	False detection due to a data read error that was caused by excessive noise	After you cycled the power supply, if this error occurs continuously although the error is reset, the non-volatile memory is faulty. Replace the Servo Drive.
				Non-volatile memory failure	
38	00	Drive Prohibition Input Error	Both the Positive Drive Prohibition (POT) and the Negative Drive Prohibition Input (NOT) turned ON.	An error occurred on the switch, wire, power supply, and wiring that was connected to the Positive Drive Prohibition Input (POT) or Negative Drive Prohibition Input (NOT).	Check and correct an error on the switch, wire, power supply, and wiring that is connected to the Positive Drive Prohibition Input or Negative Drive Prohibition Input.
				False detection occurred because the control signal power supply was turned ON slowly.	Check whether the control signal power supply (12 to 24 VDC) is turned ON slowly, and adjust the timing if it is slow.
	01	Drive Prohibition Detected	The operation was stopped according to the user setting because the motor ran in the prohibited direction when the Drive Prohibition was enabled.	Incorrect or broken wiring of Positive Drive Prohibition Input (POT) or Negative Drive Prohibition Input (NOT)	Correct the wiring if the Positive Drive Prohibition Input (POT) or Negative Drive Prohibition Input (NOT) is wired incorrectly. If the cable is broken, replace it.
				Incorrect setting of the Drive Prohibition Input	Review the setting of the drive prohibition input port and set it correctly.
41	00	Absolute Encoder Counter Overflow Error	The multi-rotation counter of the encoder exceeded the maximum number of rotations.	An inappropriate value was set in the **Encoder - Operation Selection when Using Absolute Encoder** (4510-01 hex).	Set the appropriate value in the **Encoder - Operation Selection when Using Absolute Encoder** (4510-01 hex).
				The multi-rotation number of the encoder exceeded the maximum number of rotations.	Set the travel distance so that the multi-rotation number does not exceed the maximum number of rotations.
43	01	Encoder Memory Error	The encoder detected a non-volatile memory error.	False detection due to a data read error that was caused by excessive noise	If this event occurs after you cycled the power supply, the encoder is faulty. Replace the motor.
				Non-volatile memory failure	
				Encoder failure	
44	00	1-rotation Counter Error	The encoder detected a one-rotation counter error.	There is excessive noise.	Take noise countermeasures. If this event occurs after you performed noise countermeasures, the motor is faulty. Replace the motor.
				Failure due to vibration, impact, condensation or foreign matter, etc.	

Error No. Main (hex)	Error No. Sub (hex)	Name	Cause		Measures
45	00	Absolute Encoder Multi-rotation Counter Error	The encoder detected a multi-rotation counter error.	A temporary error occurred in the encoder multi-rotation detection function due to vibration, impact, or condensation.	Use the product continuously if this event does not occur after improving the operating environment. Replace the motor if this event occurs again.
				Encoder failure	
	01	Absolute Position Detection Error	The encoder detected a multi-rotation counter error.	A detection error was detected in the multi-rotation detection section of the encoder.	Perform the Absolute Encoder Setup after cycling the power supply, and update the multi-rotation number.*1
				There is excessive noise.	Take noise countermeasures. Replace the motor if this event occurs repeatedly.
47	00	Overspeed Error	The encoder detected the overspeed.	The motor is rotated by external forces.	Take countermeasures so that the motor is not subjected to external forces if the motor is rotated by external forces.
				Encoder failure and false detection	If this event occurs repeatedly, the encoder is broken. Replace the motor.
58	00	Main Circuit Temperature Monitoring Circuit Failure	A temperature monitoring circuit failure was detected on the main circuit.		If this event occurs repeatedly after you cycled the power supply, Replace the Servo Drive.
59	00	Fan Error	The rotation speed of the fan is 40% or less of the rating and the cooling performance decreases.	There is a foreign matter in the cooling fan and it blocks the rotation.	Check whether there is a foreign matter in the fan. If you find a foreign matter, remove it.
				Cooling fan failure	If there is no improvement after you performed the correction above, replace the Servo Drive.
62	00	Control Right Release Error	Communications between the Sysmac Studio and Servo Drive were interrupted while a specific function was used from the Sysmac Studio. This error is detected when the FFT, test run, or control output check function is used.	The USB cable or EtherCAT cable was disconnected during the connection with the Sysmac Studio.	Connect the USB cable or EtherCAT cable between the Servo Drive and the computer that controls the Servo Drive if it is disconnected.
				There is excessive noise.	Take noise countermeasures for the USB cable or EtherCAT cable.
				A command sent from the Sysmac Studio was not sent to the Servo Drive because the computer was in a busy state or the like.	Finish other applications to reduce the processing load of the computer.

Error No.		Name	Cause		Measures
Main (hex)	Sub (hex)				
70	00	Safety Parameter Error	Safety process data communications were not established with the Safety CPU Unit because an incorrect parameter was received.	The set safety slave model is incorrect.	Check whether the connected safety slave model corresponds the safety slave model that is set from the setting tool. If not correspond, correct it.
				There is discrepancy between safety function setting downloaded to EtherCAT master and safety application data downloaded to safety controller.	Download a safety function setting to EtherCAT master. Also, download safety application data to a safety controller.
	01	Safety Communications Setting Error	Safety process data communications were not established with the Safety CPU Unit because of an incorrect communications setting.	The watchdog time was set incorrectly.	If the watchdog time of the safety process data communications setting was set to a value inappropriate for the communications cycle or the configuration, correct it, and transfer the setting to the Safety CPU Unit.
				The processing was not completed within the watchdog time because communications were not established due to the noise.	If there is no improvement after you performed noise countermeasures, set the longer watchdog time, and transfer the setting to the Safety CPU Unit.
	02	FSoE Slave Address Error	Safety process data communications were not established with the Safety CPU Unit because of an incorrect FSoE slave address.		Perform the FSoE Slave Address Clear for the Servo Drive.
	03	Safety Frame Error	Safety process data communications were not established with the Safety CPU Unit because an incorrect frame was received.	An incorrect frame was received in safety process data communications.	The Servo Drive model does not match the safety slave model that is sent from the safety master. Check the connection configuration and configure it correctly.
				There is excessive noise.	Take noise countermeasures.
	04	Safety Communications Timeout	A communications timeout occurred in safety process data communications with the Safety CPU Unit.	A setting is not correct. The setting of the safety task period of the Safety CPU Unit is too short.	Increase the safety task period of the Safety CPU Unit and then transfer the settings to the Safety CPU Unit.
				There is excessive noise.	Take noise countermeasures.
				The Safety CPU Unit or safety slave entered a status where it could not continue safety process data communications.	Check the status of the Safety CPU Unit or safety slave.

Error No. Main (hex)	Error No. Sub (hex)	Name	Cause		Measures
71	00	Safety Function Setting Error*2	Setting of SS1 function is incorrect	**SS1 time for velocity zero** is set longer than **SS1 time to STO**.	**SS1 time for velocity zero** is set shorter than **SS1 time to STO**.
			Setting of SS2 function is incorrect	**SS2 time for velocity zero** is set longer than **SS2 time to SOS**.	**SS2 time for velocity zero** is set shorter than **SS2 time to SOS**.
				SOS Instance corresponding to SS2 instance is not assigned to PDO Mapping.	SOS Instance corresponding to SS2 instance is mapped to safety PDO Mapping.
				SOS command 1 is set to disable in **Safety Function Disable Setting**.	**Safety Function Disable Setting** is set correctly to Activate Setting of SS2 command 1 and SOS command.
			Setting of SLS function is incorrect	**SLS time for velocity in limits** is set longer than **SLS time to velocity monitoring**.	**SLS time for velocity in limits** is set shorter than **SLS time to velocity monitoring**.
			Setting of SLP function is incorrect	**SLP position lower limit** is set higher than **SLP position upper limit**.	Set **SLP position upper limit** and **SLP position lower limit** to fulfill the followings: **SLP position upper limit** > **SLP position lower limit**.
				The absolute value of **SLP position upper limit** and **SLP position lower limit** is set more than 1,048,575 when 1 or 2 is set to **Safety Origin Position Determination Method**.	Set the absolute value of **SLP position upper limit** and **SLP position lower limit** less than 1,048,576.
				SLP position upper limit - **SLP position lower limit** is under 128.	Set **SLP position upper limit** and **SLP position lower limit** to fulfill the followings: **SLP position upper limit** - **SLP position lower limit** ≥ 128.
			Setting of SBC function is incorrect	**SBC brake time delay** is set longer than **SS1 time to STO**.	**SBC brake time delay** is set shorter than **SS1 time to STO**.
			Safety function data is broken.		Download a safety function setting to EtherCAT master and a safety controller again.
	01	SOPT Input Monitoring Error	Improper installation of SOPT input device and the malfunction were detected.	Detected a gap of the installation positions of SOPT input devices.	Check the installation positions of SOPT input devices.
				The setting of **Discrepancy Distance** (4F00-05 hex) is inappropriate.	When you set *0* to **Safety Origin Position Determination Method** (4F00-01 hex), set a value appropriate for the installation positions of **SOPT input devices to Discrepancy Distance** (4F00-05 hex).

Error No.		Name	Cause		Measures
Main (hex)	Sub (hex)				
71	01	SOPT Input Monitoring Error	Improper installation of SOPT input device and the malfunction were detected.	The setting of **Safety Origin Position Offset** (4F00-04 hex) is inappropriate.	When you set *2* to **Safety Origin Position Determination Method** (4F00-01 hex), set a value appropriate for the installation position of **SOPT input device to Safety Origin Position Offset** (4F00-04 hex).
				The setting of **Safety Origin Position Tolerance** (4F00-06 hex) is inappropriate.	Set a detected maximum error of SOPT input devices for use to **Safety Origin Position Tolerance** (4F00-06 hex).
				SOPT Input Terminal Setting (4F00-03 hex) is different from specification of input device.	Confirm the specifications of the input device, and set the appropriate value in **SOPT Input Terminal Setting** (4F00-03 hex).
				Speed where a work passed SOPT1/SOPT2 exceeded 200 r/min.	Let a work pass through SOPT1/SOPT2 in 200 r/min or less.
				Failure of input device.	Replace the input device.
				Disconnection of input device connection cable.	Replace the cable.
	02	Safety Function Error*3	Operation conditions for safety function are not fulfilled.	Safety origin position is not determined.	After fixing a safety origin position, activate SLP function.
				Discrepancy Distance is incorrectly set.	When the safety origin position is determined with use of *SOPT1 and SOPT2 Input*, set **Discrepancy Distance** to the specified values. After fixing a safety origin position, activate SLP function.
				Disconnection of cable for connection with SOPT input device.	Check that the connection cable of the safety input terminal is not damaged. If the wiring is disconnected, replace with new one.
				SOPT input device and encoder are broken.	If an error occurs repeatedly, replace the input device and the motor with new ones.
			Operation of SLS command is not appropriate.		After SLS state goes into SLS status, Reset SLS.
			Safety Position/Velocity Validation Monitoring Function exceeds the Position/Velocity Tolerance.	A motor does not rotate as commanded or the overshooting occurs.	Perform gain adjustment properly, adjusting inertia to a load. Review the operation pattern like lowering maximum operation speed in safety state and increasing acceleration/deceleration time.
				External forces rotate a motor or limit the operation.	Check device and the operation patterns not to permit external forces application to Servomotor.
			Encoder failure		Replace the motor if this event occurs repeatedly.

Error No. Main (hex)	Error No. Sub (hex)	Name	Cause		Measures
71	03	Monitoring Limit Exceedance Error*4	Detects Monitoring Limit Exceedance Error of SOS function.	**Safety Present Pulse Position** exceeded **SOS position zero window**.	Correct user programs so that **Safety Present Position**, **Safety Present Pulse Position** and **Safety Present Motor Velocity** are set respectively within monitoring window/limit set in each safety monitoring function.
				Safety Present Motor Velocity exceeded **SOS velocity zero window**.	
			Detects Monitoring Limit Exceedance Error of SLS function.	**Safety Present Motor Velocity** exceeded **SLS velocity limit**.	
			Detects Monitoring Limit Exceedance Error of SLP function.	**Safety Present Position** exceeded a range from **SLP position upper limit** to **SLP position lower limit**.	
			Detects Monitoring Limit Exceedance Error of SDI function.	**Safety Present Motor velocity** exceeded **SDI velocity zero window** to rotation limit direction.	
				Safety Present Pulse Position exceeded **SDI position zero window** to rotation limit direction.	
			The monitoring limit values/ranges for the safety functions are set lower than the allowable ranges of the safety position/the velocity validation monitoring function.		Check the monitoring ranges of the safety position/the velocity validation monitoring function and the following monitoring limit values and the range for safety monitoring functions to set the values correctly. • **SOS position zero window** • Difference between **SLP position upper limit** and **SLP position lower limit** • **SDI position zero window**
	04	Discrepancy Error at SF Input	Discrepancy between safety input1 and safety input2 was detected.	(1) Contact to power supply (+ side), ground fault and disconnection were detected at a wiring from safety input device to safety input terminal.	Check wirings of safety input 1 and safety input 2. If there are contact to power supply (+ side), ground fault and disconnection, take measures such as re-consideration of the wiring and cable replacement.
				Inappropriate safety controller setting or the failure.	Check the setting of the safety controller and the output operation to the safety input signal. If an error occurs again, replace the safety controller.

Error No.		Name	Cause		Measures
Main (hex)	Sub (hex)				
71	05	SBC Relay Diagnosis Error	Improper wiring of terminals between SBC RFB and an error of safety relay for SBC were detected.	Wrong wiring between a safety relay and SBC RFB terminal	Wire between SBC RFB terminals and Safety relay correctly.
				Safety Relay OFF Delay Time is inappropriate.	Set the time longer than Safety relay's operation time to **Safety Relay OFF Delay Time**.
				Safety Relay Activate is inappropriate.	Review **Safety Relay Activate**. • When using Safety relay: Activate [1] • When not using Safety relay: Deactivate [0]
				Wrong wiring to SBC RFB terminal	Check external wiring. If a safety relay is not used, do not wire between SBC RFB terminals.
				Failure of safety relay	Replace safety relay.
	06	External Test Signal Failure at SOPT Input	An error was detected in test pulse diagnosis for SOPT input.	SOPT input wiring contacts IOV input wiring.	Check SOPT input wiring and carry out the appropriate wiring.
				There is short circuit in the wiring of SOPT1 input and SOPT2 input.	
				Failure of externally connected equipment.	Replace the external device.
				Test Pulse Diagnosis is set inappropriately.	Reconsider **Test Pulse Diagnosis** setting.
	07	Overload Detected at Test Output	Overcurrent was detected at the test output terminals.	Ground fault of the test output to IOG input	Check wiring of the test output and carry out appropriate wiring.
				Failure of externally connected equipment.	Replace the external device.
	08	Stuck-at-high Detected at Test Output	Stuck ON was detected at test output terminals.	The wiring of the test output contacts the wiring of IOV input.	Confirm both wirings of the test output and the IOV input to perform the wirings correctly.
				There is short circuit in SOPT1 input and SOPT2 input.	
				Memory abnormality or signal abnormality due to transient factors such as soft errors and excessive noise.	Take measures against noise and cycle the power supply. If the error occurs again, replace a Servo Drive.
				Failure of the test output circuit of Servo Drive	

Error No. Main (hex)	Error No. Sub (hex)	Name	Cause		Measures
71	09	Overload Detected at SBC Output	Overcurrent was detected at the SBC output terminal.	Ground fault of SBC+ output to SBC CM input.	Check the external wiring.
				The wiring of SBC- output contacts SBC PS input.	
				Output of a power supply is out of specifications.	Check on whether power supply conforms to specifications or not.
				Memory error or signal abnormality due to transient factors such as soft errors and excessive noise.	Take measures against noise and cycle the power supply. If the error occurs again, replace a Servo Drive.
				Failure of SBC circuit of Servo Drive	
	10	Stuck-at-high Detected at SBC Output	Stuck ON was detected at the SBC output terminals.	The wiring of SBC+ output contacts SBC PS input.	Check the external wiring.
				Ground fault of SBC- output to IOG input.	
				Memory error or signal abnormality due to transient factors such as soft errors and excessive noise.	Take measures against noise and cycle the power supply. If the error occurs again, replace a Servo Drive.
				Failure of SBC circuit of Servo Drive	
	11	IOV Power Supply Voltage Error	Voltage error of IOV power supply was detected.	IOV power supply is not turned on.	Check wiring of IOV power supply and carry out the appropriate wiring.
				Overvoltage of IOV power supply	Check that the power supply voltage is input within the specified range.
	12	SBC Power Supply Voltage Error	Voltage error of SBC power supply was detected.	SBC power supply is not turned on.	Check wiring of SBC power supply and carry out the appropriate wiring.
				The SBC power supply voltage exceeds the specification upper limit value.	Check that the power supply voltage is input within the specified range.
	13	Internal Circuit Error at SF Input	Internal circuit error at SF input terminal was detected.	Memory error or signal abnormality due to transient factors such as soft errors and excessive noise.	Take measures against noise and cycle the power supply. If the error occurs again, replace a Servo Drive.
				Failure of safety input circuit of Servo Drive	
	14	Internal Circuit Error at SOPT Input	Internal circuit error was detected at SOPT input terminal.	Memory error or signal abnormality due to transient factors such as soft errors and excessive noise.	Take measures against noise and cycle the power supply. If the error occurs again, replace a Servo Drive.
				Failure of SOPT input circuit of Servo Drive	

Error No. Main (hex)	Error No. Sub (hex)	Name	Cause		Measures
71	15	Internal Circuit Error at Test Output	Internal circuit errors were detected at test output terminal.	Memory error or signal abnormality due to transient factors such as soft errors and excessive noise.	Take measures against noise and cycle the power supply. If the error occurs again, replace a Servo Drive.
				Failure of test output circuit of Servo Drive	
	16	Internal Circuit Error at SBC Output	Internal circuit error was detected at SBC Output terminal.	Memory error or signal abnormality due to transient factors such as soft errors and excessive noise.	Take measures against noise and cycle the power supply. If the error occurs again, replace a Servo Drive.
				Failure of SBC output circuit of Servo Drive	
83	01	EtherCAT State Change Error	A communications state change command was received for which the current communications state could not be changed.		Check the command specifications for communications state transitions in the host controller and correct host controller processing.
	02	EtherCAT Illegal State Change Error	An undefined communications state change command was received.		Check the command specifications for communications state transitions in the host controller and correct host controller processing.
	03	Communications Synchronization Error	Communications were not established consecutively because the synchronization with the EtherCAT Master could not be achieved.	The power supply to the host controller was interrupted during PDO communications.	Reset the error in the host controller. This event reports an error that was detected when the power supply to the host controller was interrupted. It does not indicate that an error currently exists.
				An EtherCAT communications cable is disconnected, broken, short-circuited, or has a contact failure in a daisy chain configuration.	Connect the EtherCAT communications cable securely. If the cable is broken, replace it.
				An EtherCAT communications cable is broken, short-circuited, or has a contact failure in a ring topology configuration.	• Set **Communications Error Setting** (2200 hex) to 2 or more. • Connect the EtherCAT communications cable securely. If the cable is broken, replace it.
				Noise	Take noise countermeasures if excessive noise affects the EtherCAT communications cable.
				Failure of the EtherCAT physical layer of a Servo Drive	If this event occurs again after you performed all corrections shown above, replace the Servo Drive.
	04	Synchronization Error	A signal for synchronous communications could not be detected.	Noise	Take noise countermeasures if excessive noise affects the EtherCAT communications cable.
				Error of the EtherCAT slave communications controller	If this event occurs again after you cycled the power supply, replace the Servo Drive.

Error No. Main (hex)	Error No. Sub (hex)	Name	Cause		Measures
83	05	Sync Manager WDT Error	PDO communications were interrupted for the allowable period or longer.	An EtherCAT communications cable is disconnected, loose, broken, or has a contact failure.	Connect the EtherCAT communications cable securely. If the cable is broken, replace it.
				Host controller error	Check the operation of the host controller. Take appropriate countermeasures if there is a problem.
	06	Bootstrap State Transition Request Error	The state transition to unsupported Bootstrap was requested.		Check the EtherCAT master setting so that the EtherCAT master does not request the transition to Bootstrap.
87	00	Error Stop Input	The Error Stop Input (ESTP) is active.	The Error Stop Input (ESTP) was input.	Remove the cause of Error Stop Input (ESTP).
				The Error Stop Input (ESTP) is incorrectly wired.	Correct the wiring if the Error Stop Input (ESTP) is incorrectly wired.
88	01	ESC Initialization Error	The initialization of EtherCAT slave communications controller failed.	Data was incorrectly written in the non-volatile memory of the EtherCAT slave communications controller.	If this event does not occur after you cycled the power supply, use the product continuously. It is supposed that a temporary error occurred due to a read error. If this event occurs again, replace the Servo Drive.
				Failure of the EtherCAT slave communications controller	
	02	Synchronization Interruption Error	Synchronization interruption did not occur within the specified period.	Incorrect EtherCAT synchronization setting of the host controller.	Set the synchronization setting of the host controller according to the synchronization specifications for the EtherCAT slave.
				Failure of the EtherCAT slave communications controller or false detection	If this event does not occur after you cycled the power supply, use the product continuously. It is supposed that a temporary error occurred due to a read error. If this event occurs again, the Servo Drive is faulty. Replace the Servo Drive.
	03	SII Verification Error	An error occurred in SII data of the EtherCAT slave communications controller.	Data was incorrectly overwritten in the non-volatile memory of the EtherCAT slave communications controller.	If this event does not occur after you cycled the power supply, use the product continuously. It is supposed that a temporary error occurred due to a read error. If this event occurs again, replace the Servo Drive.
				Failure of the EtherCAT slave communications controller or false detection	
88	04	ESC Error	An error occurred in the EtherCAT slave communications controller.		If this event occurs repeatedly after you cycled the power supply, the EtherCAT slave communications controller is faulty. Replace the Servo Drive.

Error No.		Name	Cause		Measures
Main (hex)	Sub (hex)				
90	00	Mailbox Setting Error	An incorrect mailbox setting of Sync Manager was detected.		Check the mailbox setting, and then download it to the EtherCAT master again.
	01	PDO WDT Setting Error	An incorrect PDO WDT setting was detected.		Check the PDO WDT setting, and then download it to the EtherCAT master again.
	02	SM Event Mode Setting Error	The unsupported SM Event Mode was set.		Check the synchronization setting, and then download it to the EtherCAT master again.
	03	DC Setting Error	A mistake was made in the DC Mode operation setting.		Check the DC Mode setting, and then download it to the EtherCAT master again.
	04	Synchronization Cycle Setting Error	When the DC mode was established, the cycle time was set to the inoperable value. In the variable PDO mapping, the maximum number of objects you can map is specified as follows: 6 for both RxPDO and TxPDO for the communication period of 125 µs, 10 for both RxPDO and TxPDO for other communication periods. An error occurs if you map a larger number of objects than that specified above. This error is also detected in the following case: the cycle time is an integral multiple of 125 µs and is not 10 ms or lower.	The variable PDO mapping is used, and the number of objects is more than the maximum number of mapped objects for the cycle time.	Set the number of objects to a value smaller than the maximum number of mapped objects for the cycle time.
				The cycle time setting is incorrect.	Correct the cycle time setting.
	05	RxPDO Setting Error	An RxPDO setting error was detected.	The RxPDO setting of EtherCAT master is incorrect.	Correct the RxPDO setting according to the definition of ESI of Servo Drive, and then download it to the EtherCAT master again. If this event occurs repeatedly after the download to the EtherCAT master, the Servo Drive is faulty. Replace the Servo Drive.
				Servo Drive failure	
	06	TxPDO Setting Error	A TxPDO setting error was detected.	The TxPDO setting of EtherCAT master is incorrect.	Correct the TxPDO setting according to the definition of ESI of Servo Drive, and then download it to the EtherCAT master again. If this event occurs repeatedly after the download to the EtherCAT master, the Servo Drive is faulty. Replace the Servo Drive.
				Servo Drive failure	

Error No.		Name	Cause	Measures
Main (hex)	Sub (hex)			
90	07	RxPDO Mapping Error	An incorrect RxPDO was set, such as out of the allowable range of Index, Subindex, or size. This error is detected when the following settings are made. • If an object which cannot be mapped as a PDO is mapped • If the total size of objects mapped as the safety process data exceeds the specified size • If the total size of objects mapped to Sync Manager 2 PDO Assignment is one byte • If the total size of objects mapped as the variable PDOs exceeds the maximum size • If 1A10 hex is not mapped while 1610 hex is mapped • If there were too many or too little data in 1610 hex • If the process data components were included in PDOs other than 1610 hex • If instances of the same safety functions are doubly assigned to 1610hex	Correct the RxPDO setting, and then download it to the EtherCAT master again.
	08	TxPDO Mapping Error	An incorrect TxPDO was set, such as out of the allowable range of Index, Subindex, or size. This error is detected when the following settings are made. • If an object which cannot be mapped as a PDO is mapped • If the total size of objects mapped as the safety process data exceeds the specified size • If the total size of objects mapped to Sync Manager 3 PDO Assignment is one byte • If the total size of objects mapped as the variable PDOs exceeds the maximum size • If 1610 hex is not mapped while 1A10 hex is mapped • If there were too many or too little data in 1A10 hex • If the process data components were included in PDOs other than 1A10 hex • If instances of the same safety functions are doubly assigned to 1A10hex	Correct the TxPDO setting, and then download it to the EtherCAT master again.
	09	Node Address Updated	The node address is changed from a set value in Sysmac Studio to a value of the ID switches.	Check the node address value. Set a correct value if it is wrong.

Error No.		Name	Cause		Measures
Main (hex)	Sub (hex)				
91	01	Command Error	A mistake was made in using a command.	When bit 9 (Remote) of the Statusword was set to *1* (remote), and the Servo Drive was in *Operation enabled* state (Servo ON), the Servo Drive received a command to change the communications state from Operational to another state (Init, Pre-Operational, or Safe-Operational).	Check the Servo Drive specifications and use the command correctly.
				A mode of operation other than the hm mode was set during the homing operation.	
				Modes of operation was set to pp, pv or hm mode when the communications period was set to shorter than 250 μs.	
93	00	Electronic Gear Setting Error	The electronic gear ratio exceeded the allowable range. You can set the electronic gear ratio to the range from 1/2,000 to 2,000 times.		Correct the electronic gear ratio to the range from 1/2,000 to 2,000 times.
94	00	Function Setting Error	The function that was set does not support the communications period.	The electronic gear ratio was not 1:1 when the communications period was set to 125 μs.	Correct the electronic gear ratio to 1:1, or set the communications period to longer than 125 μs.
				The Backlash Compensation was enabled when the communications period was set to 125 μs.	Disable the Backlash Compensation, or set the communications period to longer than 125 μs.
95	01	Motor Non-conformity	The Servo Drive and motor combination is not correct.		Replace the motor with one that matches the Servo Drive.
	05	Motor Replacement Detected	The connected motor is different from the motor that was connected the last time.	The motor was replaced.	Perform the Motor Setup and Absolute Encoder Setup.
				The Servo Drive was replaced.	Perform the Motor Setup.
97	00	Brake Interlock Error	The Brake Interlock Output (BKIR) was output by the Timeout at Servo OFF.	The Brake Interlock Output (BKIR) was output because the motor rotation speed did not decrease to or less than the speed set in the Threshold Speed at Servo OFF within the time set in the Timeout at Servo OFF when Servo OFF was performed during the motor operation.	Increase the set value of the Timeout at Servo OFF according to actual operation conditions.

Error No.		Name	Cause		Measures
Main (hex)	Sub (hex)				
A0	00	Overload Warning	The load ratio of Servo Drive or motor (4150-81 hex) exceeded the level set in the **Overload - Warning Notification Level** (4150-01 hex).	Operation was continued for a long time with high load.	Perform the following corrections accordingly. • Increase the set value of the acceleration/deceleration time or the stop time. • Lighten the load. • Adjust the gain and inertia ratio. • If torque waveforms oscillate excessively, adjust the system by the tuning so that the oscillation does not occur. • Set the appropriate brake timing. • Increase the capacities of the Servo Drive and the motor.
				There is incorrect wiring of the motor cable or a broken cable.	• Connect the motor cable as shown in the wiring diagram. If the cable is broken, replace it. Or, connect the motor cable and encoder cable that are used together to the same motor. • Measure the voltage at the brake terminal. If the brake is applied, release it.
				Increase in friction	Check machine conditions and remove the cause of the friction.
A1	00	Regeneration Overload Warning	The Regeneration Load Ratio (4310-81 hex) exceeded 85% of the regeneration overload ratio.	The regeneration processing is set inappropriately.	Check the regeneration processing setting, and set the same value as the resistance value of the Regeneration Resistor in use.
				The Regeneration Resistor is selected inappropriately.	Check the operation pattern by the velocity monitor. Check the load ratio of Regeneration Resistor, and perform the following corrections accordingly. • Increase the deceleration time and stopping time. • Decrease the command velocity to the motor. • Use an External Regeneration Resistor. • Increase the capacities of the Servo Drive and the motor.
				This Regeneration Resistor is used for continuous regenerative braking.	The Regeneration Resistor cannot be used for continuous regenerative braking.
				The applied power supply voltage is higher than the specified value.	Apply the specified power supply voltage.
				Regeneration Resistor failure	Check whether the Regeneration Resistor is faulty, and use one without failures.

Error No.		Name	Cause		Measures
Main (hex)	Sub (hex)				
A3	00	Fan Rotation Warning	The rotation speed of the fan is 80% or less of the rating and the cooling performance decreases.	There is a foreign matter in the cooling fan and it blocks the rotation.	Check whether there is a foreign matter in the fan. If you find a foreign matter, remove it.
				Cooling fan failure	If there is no improvement after you performed the correction above, replace the Servo Drive.
A6	00	Motor Vibration Warning	The motor vibration, which was higher than or equal to the level set in the **Vibration Detection - Detection Level** (3B70-01 hex), was detected.	The control parameter is set inappropriately.	Set the control parameters such as inertia ratio, gain, and filter to appropriate values by gain tuning or manually.
				The rigidity decreased due to mechanical looseness or wear.	Check whether the mechanical system is not loose and secure it firmly. If the rigidity of mechanical system is changed, adjust the control parameter again.
A7	01	Capacitor Lifetime Warning	The capacitor built into the Servo Drive reached the service life.	The operating time of the capacitor in the Servo Drive exceeded the service life.	Send the Servo Drive for repair or replace the Servo Drive with a new one. It is necessary to replace the component that reached the service life.
	02	Inrush Current Prevention Relay Lifetime Warning	The inrush current prevention relay built into the Servo Drive reached the service life.	The number of operating times of the inrush current prevention relay in the Servo Drive exceeded the service life.*5	
	05	Lifetime Information Corruption Warning	An error was detected in the saved lifetime information.	The lifetime information corruption was detected when the power supply was turned ON.	Perform the Lifetime Information Clear. Note that the lifetime may not be detected correctly after the clear operation because the value of lifetime information is cleared. If this event occurs repeatedly, the area to save lifetime information is faulty. Replace the Servo Drive.
	06	Encoder Lifetime Warning	The encoder lifetime is close to the end.	Temporary noise	If this event occurs repeatedly, the lifetime is close to the end. Replace the motor.
				The end of the encoder life	
	0C	Safety Relay Lifetime Warning	A safety relay for SBC reached the lifetime counting.	Use numbers of safety relay for SBC surpassed detection thresholds of **Lifetime Information - Safety Relay Lifetime Warning Detection Threshold**(4140-01 hex).	• Check **Lifetime Information - Safety Relay Lifetime Warning Detection Threshold** (4140-01 hex) and set an appropriate value. • After replacing safety relay for SBC, clear the Safety Relay ON Count.

Error No.		Name	Cause		Measures
Main (hex)	Sub (hex)				
AB	00	Absolute Encoder Counter Overflow Warning	The multi-rotation counter of the encoder exceeded the value set in **Encoder - Absolute Encoder Counter Overflow Warning Level** (4510-02 hex).	An inappropriate value was set in the **Encoder - Operation Selection when Using Absolute Encoder** (4510-01 hex).	Set an appropriate value in the **Encoder - Operation Selection when Using Absolute Encoder** (4510-01 hex).
				The multi-rotation number of the encoder exceeded the warning level.	Set the travel distance so that the multi-rotation number does not exceed the value set in the **Encoder - Absolute Encoder Counter Overflow Warning Level** (4510-02 hex).
B0	00	Data Setting Warning	The object set value is out of the range.		Correct the object setting to be within the specified range.
B1	00	Command Warning	A command could not be executed.	The *Switch on* command was received.	Send the *Switch on* command with the main circuit power supply ON.
				The *Enable operation* command was received.	Send the *Enable operation* command under the following conditions. • In supported operation mode • The motor rotation speed is 30 r/min or less. • In the free-run mode, the interpolation time period is the integral multiple of the communications cycle.
				An operation command in the prohibition direction was received after the immediate stop by the Drive Prohibition Input or Software Position Limit.	Check status of the Drive Prohibition Input and Software Position Limit by the Digital inputs, Statusword, and Software Position Limit. Then, do not issue the command in the drive prohibition direction.
				Homing started.	Set a supported number of the Homing method for homing. Start homing at the timing of when homing is not performed.
				The positioning start command was received in the Profile position mode.	Set a supported value for bit 5 and 6 in the Controlword.

Error No.		Name	Cause		Measures
Main (hex)	Sub (hex)				
B2	00	EtherCAT Communications Warning	An EtherCAT communications error occurred more than one time.	An EtherCAT communications cable is disconnected, broken, short-circuited, or has a contact failure in a daisy chain configuration.	Connect the EtherCAT communications cable securely. If the cable is broken, replace it.
				• In a ring topology configuration, the ring disconnection status occurred. • In a ring topology configuration, the ring disconnection status was fixed.	Refer to *13-4 Method for Ring Disconnection Maintenance and Inspection* on page 13-5 and perform inspection.
				Noise	Take noise countermeasures so that the noise does not affect the EtherCAT communications cable.
				Failure of the EtherCAT physical layer of a Servo Drive	If this event occurs again after you performed all corrections shown above, replace the Servo Drive.
C0 (ST)	00	STO Detected	The safety input OFF state was detected via the safety input signal or EtherCAT communications.	There are detached wires and the disconnection on of safety input cable.	Reconnect the input wiring of safety inputs 1 and 2 and safety input unit. If the cable is disconnected, replace the cable with new one.
				Incorrect safety programming of safety controller.	Reconsider safety program.
				Torque off request was detected at safety input signal.	After safety check, search the cause and resolve the problems.
				Torque off request was detected by commands via EtherCAT communication.	

*1. Refer to *10-2-4 Absolute Encoder Setup* on page 10-7 for the absolute encoder setup.
*2. For more details, refer to additional information of *Safety Function Setting Error* on page A-170.
*3. For more details, refer to additional information of *Safety Function Error* on page A-177.
*4. For more details, refer to additional information of *Monitoring Limit Exceedance Error* on page A-186.
*5. Refer to *13-2 Servo Drive Lifetime* on page 13-3 for the lifetime of components.

12-5-2 Troubleshooting Using AL Status Codes

The AL status codes notify users of errors related to EtherCAT communications.

This section gives errors that 1S-series Servo Drives notify to the host controllers with AL status codes, as well as their causes and remedies.

AL Status Code List

AL status code (hex)	Name	Cause		Measures
0011	EtherCAT State Change Error	A communications state change command was received for which the current communications state could not be changed.		Check the command specifications for communications state transitions in the host controller and correct host controller processing.
0012	EtherCAT Illegal State Change Error	An undefined communications state change command was received.		Check the command specifications for communications state transitions in the host controller and correct host controller processing.
0013	Bootstrap State Transition Request Error	The state transition to unsupported Bootstrap was requested by the EtherCAT master.		Check the EtherCAT master setting so that the EtherCAT master does not request the transition to Bootstrap.
0014	SII Verification Error	An error occurred in SII data of the EtherCAT slave communications controller.	Data was incorrectly overwritten in the non-volatile memory of the EtherCAT slave communications controller.	If this event does not occur after you cycled the power supply, use the product continuously. It is supposed that a temporary error occurred due to a read error. If this event occurs again, replace the Servo Drive.
			Failure of the EtherCAT slave communications controller or false detection	
0016	Mailbox Setting Error	An incorrect mailbox setting of Sync Manager was detected.		Check the mailbox setting, and then download it to the EtherCAT master again.
001B	Sync Manager WDT Error	PDO communications were interrupted for the allowable period or longer.	An EtherCAT communications cable is disconnected, loose, or broken	Connect the EtherCAT communications cable securely.
			Host controller error	Check the operation of the host controller. Take appropriate countermeasures if there is a problem.
001D	RxPDO Setting Error	An RxPDO setting error was detected.	The RxPDO setting of EtherCAT master is incorrect.	Correct the RxPDO setting according to the definition of ESI of Servo Drive, and then download it to the EtherCAT master again. If this event occurs repeatedly after the download to the EtherCAT master, the Servo Drive is faulty. Replace the Servo Drive.
			Servo Drive failure	

AL status code (hex)	Name	Cause		Measures
001E	TxPDO Setting Error	A TxPDO setting error was detected.	The TxPDO setting of EtherCAT master is incorrect. Servo Drive failure	Correct the TxPDO setting according to the definition of ESI of Servo Drive, and then download it to the EtherCAT master again. If this event occurs repeatedly after the download to the EtherCAT master, the Servo Drive is faulty. Replace the Servo Drive.
001F	PDO WDT Setting Error	An incorrect PDO WDT setting was detected.		Check the PDO WDT setting, and then download it to the EtherCAT master again.
0024	TxPDO Mapping Error	An incorrect TxPDO was set, such as out of the allowable range of Index, Subindex, or size. This error is detected when the following settings are made. • If an object which cannot be mapped as a PDO is mapped • If the total size of objects mapped as the safety process data exceeds the specified size • If the total size of objects mapped to **Sync Manager 3 PDO Assignment** is one byte • If the total size of objects mapped as the variable PDOs exceeds the maximum size • If 1610 hex is not mapped while 1A10 hex is mapped • If there were too many or too little data in 1A10 hex • If the process data components were included in PDOs other than 1A10 hex • If instances of the same safety functions are doubly assigned to 1A10hex		Correct the TxPDO setting, and then download it to the EtherCAT master again.
0025	RxPDO Mapping Error	An incorrect RxPDO was set, such as out of the allowable range of Index, Subindex, or size. This error is detected when the following settings are made. • If an object which cannot be mapped as a PDO is mapped • If the total size of objects mapped as the safety process data exceeds the specified size • If the total size of objects mapped to **Sync Manager 2 PDO Assignment** is one byte • If the total size of objects mapped as the variable PDOs exceeds the maximum size • If 1A10 hex is not mapped while 1610 hex is mapped • If there were too many or too little data in 1610 hex • If the process data components were included in PDOs other than 1610 hex • If instances of the same safety functions are doubly assigned to 1610hex		Correct the RxPDO setting, and then download it to the EtherCAT master again.
0028	SM Event Mode Setting Error	The unsupported SM Event Mode was set.		Check the synchronization setting, and then download it to the EtherCAT master again.

AL status code (hex)	Name	Cause		Measures
002C	Synchronization Error	A signal for synchronous communications could not be detected.	Noise	Take noise countermeasures if excessive noise affects the EtherCAT communications cable.
			Error of the EtherCAT slave communications controller	If this event occurs again after you cycled the power supply, replace the Servo Drive.
0030	DC Setting Error	A mistake was made in the DC Mode operation setting.		Check the DC Mode setting, and then download it to the EtherCAT master again.
0034	Communications Synchronization Error	Communications were not established consecutively because the synchronization with the EtherCAT Master could not be achieved.	The power supply to the host controller was interrupted during PDO communications.	Reset the error in the host controller. This event reports an error that was detected when the power supply to the host controller was interrupted. It does not indicate that an error currently exists.
			An EtherCAT communications cable is disconnected, broken, short-circuited, or has a contact failure in a daisy chain configuration.	Connect the EtherCAT communications cable securely. If the cable is broken, replace it.
			An EtherCAT communications cable is broken, short-circuited, or has a contact failure in a ring topology configuration.	• Set **Communications Error Setting** (2200 hex) to 2 or more. • Connect the EtherCAT communications cable securely. If the cable is broken, replace it.
			Noise	Take noise countermeasures if excessive noise affects the EtherCAT communications cable.
			Failure of the EtherCAT physical layer of a Servo Drive	If this event occurs again after you performed all corrections shown above, replace the Servo Drive.
0035	Synchronization Cycle Setting Error	When the DC mode was established, the cycle time was set to the inoperable value. In the variable PDO mapping, the maximum number of objects you can map is specified as follows: 6 for both RxPDO and TxPDO for the communication period of 125 µs, 10 for both RxPDO and TxPDO for other communication periods. An error occurs if you map a larger number of objects than that specified above. This error is also detected in the following case: the cycle time is an integral multiple of 125 µs and is not 10 ms or lower.	The variable PDO mapping is used, and the number of objects is more than the maximum number of mapped objects for the cycle time.	Set the number of objects to a value smaller than the maximum number of mapped objects for the cycle time.
			The cycle time setting is incorrect.	Correct the cycle time setting.

AL status code (hex)	Name	Cause		Measures
0050	ESC Error	An error occurred in the EtherCAT slave communications controller.	Error access from the non-OMRON EtherCAT master	Please contact the manufacturer of EtherCAT master.
0051			Error of the EtherCAT slave communications controller or false detection	If this event occurs repeatedly after you cycled the power supply, the EtherCAT slave communications controller is faulty. Replace the Servo Drive.
0061	Node Address Updated	The node address is changed from a set value in Sysmac Studio to a value of the ID switches.		Check the node address value. Set a correct value if it is wrong.
8000	Unit Restarted	Restart was performed.		---

12-5-3 Troubleshooting Using the Operation State

Symptom	Probable cause	Check items	Measures
The 7-segment display does not light.	The control power is not supplied.	Check to see if the power supply input is within the allowed power supply voltage range.	Supply the correct power supply voltage.
		Check to see if the power supply input is wired correctly.	Wire correctly.
The ECAT ERR indicator flashes or lights.	A communications-related error occurred.	Refer to *EtherCAT Communications Warning* on page 12-9.	
The L/A IN and L/A OUT indicators are OFF.	A link in the EtherCAT physical communications layer is not established.	Check to see if the communications cable is connected correctly.	Connect the communications cable correctly.
		Check to see if the host controller started.	Start the host controller.
The L/A IN or L/A OUT indicator is OFF.	In a ring topology configuration, the ring disconnection status occurred.	Refer to *13-4 Method for Ring Disconnection Maintenance and Inspection* on page 13-5 and perform inspection. If the Servo Drive is faulty, replace it.	
An error occurred.	Read the error number and the error log.	Check the cause listed in *12-5-1 Troubleshooting Using Error Displays* on page 12-16.	
The Servo does not lock.	A power cable is not connected correctly.	Check to see if the motor power cable is connected properly.	Wire the motor power cable correctly.
	The Servomotor power supply is not ON.	Check the main circuit wiring and power voltage.	Input the correct power and voltage for the main circuit.
	Positive Drive Prohibition Input (POT) or Negative Drive Prohibition Input (NOT) is OFF.	• Check to see if the input for POT or NOT is OFF. • Check the input of +24 VIN to CN1.	Turn ON POT and NOT. Input +24 VIN correctly.
	The torque limit is set to *0*.	Check to see if the torque limits in the **Positive torque limit value** (60E0 hex) and the **Negative torque limit value** (60E1 hex) are set to *0*.	Set the maximum torque that you use for each of these objects.
	The Servo Drive is in a safe state (STO).	Check the wiring of the safety input.	Wire correctly.
	Communications with the Safety CPU Unit are not established.	When you use the safety function via EtherCAT communications, confirm that communications with the Safety CPU Unit are performed.	Make the settings for the Safety CPU Unit.
	The Servo Drive is broken down.	---	Replace the Servo Drive.

Symptom	Probable cause	Check items	Measures
The Servo locks but the Servomotor does not rotate.	The host controller does not give a command.	For a position command, check to see if the speed and position are set to *0*.	Enter position and speed data. Start the Servomotor.
	The Servo Drive received a command but it is not accepted.	Check to see if the Servo Drive retains the object value for two communications cycles or more in Profile position mode (pp).	Set the Servo Drive so that it retains the object value for two communications cycles or more.
	It is hard to determine if the Servomotor is rotating.	Check to see if the velocity command given by the host controller is too small.	Check the velocity command from the host controller.
	A brake for hold is operated.	Check a brake interlock (BKIR) signal and 24 VDC power supply.	Check that the brake for hold in a Servomotor is reset with Servo lock.
		Check SBC status.	Input a command for SBC resetting.
	The torque limits set in the **Positive torque limit value** (60E0 hex) and the **Negative torque limit value** (60E1 hex) are too small.	Check to see if the torque limits in objects 60E0 hex and 60E1 hex are set to a value close to *0*.	Set the maximum torque that you use for each of these objects.
	Positive Drive Prohibition Input (POT) or Negative Drive Prohibition Input (NOT) is OFF.	Check the ON/OFF state of the POT and NOT signals from the Sysmac Studio.	• Turn ON the POT and NOT signals. • Disable them in the settings when the POT and NOT signals are not used.
	The motor power cable is wired incorrectly.	Check the wiring.	Wire correctly.
	An encoder cable is wired incorrectly.		
	Power is not supplied.	Check the power supply and the 7-segment display.	Turn ON the power.
		Check the voltage between the power terminals.	Wire the power-ON circuit correctly.
	The Servo Drive is broken down.	---	Replace the Servo Drive.
The Servomotor operates momentarily, but then it does not operate after that.	The position commands given are too little.	Check the position data and the electronic gear ratio at the host controller.	Set the correct data.
	The motor power cable is wired incorrectly.	Check the wiring of the motor power cable's phases U, V, and W.	Wire correctly.
	An encoder cable is wired incorrectly.	Check the encoder cable's wiring.	Wire correctly.
The Servomotor rotates without a command.	There are inputs of small values in velocity control mode.	Check if there is an input in velocity control mode.	Set the velocity command to *0*. Alternatively, change the mode to position control mode.
	The motor power cable is wired incorrectly.	Check the wiring.	Wire correctly.
When the runaway detection function is enabled, the Servomotor rotates without a command.	The Servomotor power cable is wired incorrectly, and conditions under which the runaway detection function cannot work are satisfied.	Check the wiring.	Wire correctly.

Symptom	Probable cause	Check items	Measures
The Servomotor rotates in the reverse direction from the command.	The value set in **Motor Rotation Direction Selection** (3000-01 hex) is incorrect.	Check the value of **Motor Rotation Direction Selection**.	Change the value of **Motor Rotation Direction Selection**.
	The command given by the host controller is incorrect.	• The size of the absolute command is set incorrect. • The polarity of an incremental command is set incorrect.	• Check the actual and target values. • Check the rotation direction.
	The Servomotor power cable is wired incorrectly.	Check the wiring.	Wire correctly.
When the runaway detection function is enabled, the Servomotor rotates in the reverse direction from the command.	The value set in **Motor Rotation Direction Selection** (3000-01 hex) is incorrect.	Check the value of **Motor Rotation Direction Selection**.	Change the value of **Motor Rotation Direction Selection**.
	The command given by the host controller is incorrect.	• The size of the absolute command is set incorrect. • The polarity of an incremental command is set incorrect.	• Check the actual and target values. • Check the rotation direction.
	The Servomotor power cable is wired incorrectly.	Check the wiring.	Wire correctly.
	The Servomotor power cable is wired incorrectly, and conditions under which the runaway detection function cannot work are satisfied.		
The holding brake does not work.	Power is supplied to the holding brake.	Check to see if power is supplied to the holding brake.	• Check the Brake Interlock Output (BKIR) signal and the relay circuit. • Check to see if the holding brake is worn down.
Motor rotation is unstable.	The motor power cable or encoder cable is wired incorrectly.	Check the wiring of the motor power cable's phases U, V, W and check the encoder cable's wiring.	Wire correctly.
	Low rigidity is causing vibration.	Measure the vibration frequency of the load.	Enable the damping control. Set the damping filter frequency.
	The load's moment of inertia exceeds the Servo Drive's allowable value.	Calculate the load inertia.	• Check if manual tuning can achieve proper adjustment. • Increase the Servomotor capacity.
	Loose joint and/or large clearance with the machine.	Check the joint with the machine.	Remove the joint looseness with the machine.
	The load and gain do not match.	Check the response waveforms for speed and torque.	Perform the tuning again to stabilize the rotation.

Symptom	Probable cause	Check items	Measures
The Servomotor is overheating.	The ambient temperature is too high.	Check to see if the ambient temperature around the Servomotor is over 40°C.	• Lower the ambient temperature around the Servomotor to 40°C or less. (Use a fan or air conditioner.) • Lower the load ratio.
	The heat radiation condition for the Servomotor is inappropriate.	• Check to see if the specified radiation conditions are observed. • For a Servomotor with a brake, check the load ratio.	• Improve the radiation conditions. • Reduce the load. • Improve ventilation.
	The Servomotor is overloaded.	Check the torque with the Sysmac Studio.	• Decrease the acceleration and deceleration rates. • Lower the speed and check the load.
	The Servomotor vibrates during rotation.		
The machine position is misaligned.	The coupling of the motor shaft and the machine is abnormal.	Check to see if the coupling of the Servomotor and the machine is misaligned.	• Tighten the coupling again. • Replace the coupling with a coupling that has no looseness.
	The host controller gave a deceleration stop command.	Check the control ladder program in the host controller.	Review the control in the host controller.
	The gain is wrong.	---	Check if manual tuning can achieve proper adjustment.
	The load inertia is too large.	• Check the load inertia. • Check the Servomotor rotation speed.	• Review the load inertia. • Replace the Servomotor and Servo Drive with proper ones.
	The power supply was turned ON while the encoder multi-rotation exceeded the limit value.	Check **Encoder - Multi-rotation Data**.	Perform the operation within the multi-rotation range.
	The command value from the host controller is not correct.	Check the control ladder program and settings in the host controller.	Review the control and settings in the host controller.
	The home position was shifted.	• Check the home position of the absolute encoder. • Check whether homing is performed normally.	• Adjust the mechanical home and home position of the absolute encoder. • Change the setting or input signals so that the correct home position can be defined during homing.
	The set values of the Servo Drive do not match the machine.	Check the settings of gear ratio, gain, maximum torque, etc.	Adjust the set values so that they match the machine.
The Servomotor does not stop or is hard to stop even if the Servo is turned OFF while the Servomotor is rotating.	The load inertia is too large.	• Check the load inertia. • Check the Servomotor rotation speed.	• Review the load inertia. • Replace the Servomotor and Servo Drive with proper ones.
	The dynamic brake is disabled.	Check if the dynamic brake is disabled or broken.	• Enable the dynamic brake, if it is disabled. • Replace the dynamic brake if it is broken.

Symptom	Probable cause	Check items	Measures
The Servomotor or the load generates abnormal noise or vibration.	Vibration occurs due to improper mechanical installation.	Check to see if the Servomotor's mounting screws are loose.	Retighten the mounting screws.
		Check the load for eccentricity.	Eliminate the eccentricity. It results in torque fluctuation and noise.
		Check to see if the coupling with the load is unbalanced.	Balance the rotation.
		Check to see if the decelerator is generating any abnormal noise.	Check the decelerator specifications. Check the decelerator for malfunctions.
	Vibration occurs due to low mechanical rigidity.	Check to see if the vibration frequency is 100 Hz or lower.	If the frequency is 100 Hz or lower, set the correct damping frequency for the damping filter to eliminate the vibration.
	Vibration occurs due to machine resonance.	Check to see if the resonance frequency is high or low.	If the resonance frequency is high, set the adaptive filter to eliminate the resonance. Alternatively, measure the resonance frequency and set 1st Notch Filter and 2nd Notch Filter.
	There is a problem with the bearings.	Check for noise or vibration around the bearings.	Check to see if the bearings are mounted properly, and adjust them if necessary.
	The gain is too high.	---	Use the Sysmac Studio to measure the response and adjust the gain.
	Velocity Command Filter (3021 hex) is wrong.	Check the set value of **Velocity Command Filter**.	Return the setting to the default value of *0*. Alternatively, set a large value and operate the Servomotor.

Symptom	Probable cause	Check items	Measures
The Servomotor or the load generates abnormal noise or vibration.	**1st Torque Command Filter** (3233 hex) or **2nd Torque Command Filter** (3234 hex) does not match the load.	Review the set value of the torque command filter.	Set a small value for the torque command filter to eliminate the vibration.
	1st Position Control Gain (3213 hex) or **2nd Position Control Gain** (3214 hex) is too large.	Review the setting of the position control gain.	Use the Sysmac Studio to measure the response and adjust the gain.
	Proportional Gain and **Integral Gain** in **1st Velocity Control Gain** (3223 hex) and **2nd Velocity Control Gain** (3224 hex) are balanced incorrectly.	Review the set values of the velocity control gain.	
	Noise is entering into the control I/O signal cable because the cable is longer than the specified length.	Check the length of the control I/O signal cable.	Shorten the control I/O signal cable to 3 m or less.
	Noise is entering into the cable because the encoder cable does not meet specifications.	Check if a standard integrated cable is used.	Use a standard integrated cable.
	Noise is entering into the encoder cable because the cable is longer than the specified length.	Check the length of the encoder cable.	Shorten the encoder cable to less than 50 m.
	Noise is entering into the signal lines because the encoder cable is stuck or the sheath is damaged.	Check the encoder cable for damage.	Correct the encoder cable's pathway.
	Excessive noise on the encoder cable.	Check to see if the encoder cable is bound together with or too close to high-current lines.	Install the encoder cable where it won't be subjected to surges.
	The FG's potential is fluctuating due to devices near the Servomotor, such as welding machines.	Check for ground problems (loss of ground or incomplete ground) at equipment such as welding machines near the Servomotor.	Ground the equipment properly and prevent current from flowing to the encoder FG.
	Errors are caused by excessive vibration or shock on the encoder.	There are problems with mechanical vibration or Servomotor installation (such as the precision of the mounting surface, attachment, or axial offset).	Reduce the mechanical vibration or correct the Servomotor's installation.
Overshooting at startup or when stopping	**1st Position Control Gain** (3213 hex) or **2nd Position Control Gain** (3214 hex) is too large.	Review the setting of the position control gain.	Use the Sysmac Studio to measure the response and adjust the gain.
	Proportional Gain and **Integral Gain** in **1st Velocity Control Gain** (3223 hex) and **2nd Velocity Control Gain** (3224 hex) are balanced incorrectly.	Review the set values of the velocity control gain.	
	The set inertia ratio differs from the load.	Review the set value of the **Inertia Ratio** (3001-01 hex).	Adjust the set value of the Inertia Ratio.

Symptom	Probable cause	Check items	Measures
Vibration is occurring at the same frequency as the power supply.	Inductive noise is occurring.	Check to see if the drive control signal lines are too long.	Shorten the control signal lines.
		Check to see if the control signal lines and power supply lines are bound together.	• Separate control signal lines from power supply lines. • Use a low-impedance power supply for control signals.
The command velocity or torque is not reached.	The input command value exceeds the velocity limit value or the torque limit value.	Check to see if the Internal limit active bit of Statusword is active.	Input the command value that does not exceed the velocity limit value or the torque limit value from the host controller.
The 7-segment display does not light, and the ERR and the ECAT ERR indicators are OFF.	A fatal software error caused by excessive noise or a hardware error was detected.	• Check to see if the control signal lines and power supply lines are bound together. • Check to see if USB cable is near by main circuit power cable.	• Separate USB cable and control signal lines from power supply lines. • Replace the Servo Drive if this symptom occurs repeatedly after you cycled the power supply.

13

Maintenance and Inspection

This section explains maintenance and inspection of the Servomotors and Servo Drives.

13-1 Periodic Maintenance **13-2**
13-2 Servo Drive Lifetime **13-3**
13-3 Servomotor Lifetime **13-4**
13-4 Method for Ring Disconnection Maintenance and Inspection **13-5**

13-1 Periodic Maintenance

Caution

After replacing the Servo Drive, transfer to the new Servo Drive all data needed to resume operation, before restarting operation. Equipment damage may result.

Do not repair the Servo Drive by disassembling it. Electric shock or injury may result.

Servomotors and Servo Drives contain many components and will operate properly only when each of the individual components is operating properly.

Some of the electrical and mechanical components require maintenance depending on application conditions. Periodic inspection and replacement are necessary to ensure proper long-term operation of Servomotors and Servo Drives. (Quoted from *The Recommendation for Periodic Maintenance of a General-purpose Inverter published* by JEMA.)

The periodic maintenance cycle depends on the installation environment and application conditions of the Servomotors and Servo Drives.

Recommended maintenance times are given below for Servomotors and Servo Drives. Use these for reference in periodic maintenance.

Inspection items for the built-in brake of the Servomotor are as follows:

- The applied voltage of the brake is appropriate.
- The operating ambient temperature is appropriate.
- No an abnormal noise and heat generation.
- Operation timing of the brake is appropriate.*1

*1. The built-in brake of the Servomotor is a holding brake. Confirm that the brake is applied after the Servomotor stops.

When you use the SBC function, confirm SBC operation once every three months.

13-2 Servo Drive Lifetime

- The lifetime of Servo Drive depends on application conditions. When the ambient temperature is 40°C and the average output is 70% of the rated output, the design life expectancy is ten years.
- The use of the Servo Drive in a hot environment shortens its lifetime. We recommend that the ambient temperature and the power supply ON time be reduced as much as possible to lengthen the lifetime of the Servo Drive.
- The lifetimes for the different parts of Servo Drive are given below.

Name	Lifetime
Inrush current prevention relay	Approx. 36,500 operations (lifetime depends on application conditions.)

13-3 Servomotor Lifetime

The lifetimes for the different motor parts are listed below.

Name	Lifetime
Bearing	20,000 hours
Decelerator	20,000 hours
Oil seal	5,000 hours (models with oil seal)
Encoder	25,000 hours
Brake	ON/OFF 1,000,000 times*1

*1. For inspection items about the brake, refer to *13-1 Periodic Maintenance* on page 13-2.

The operating conditions are determined as follows.

- Operating ambient temperature: 0 to 40°C
- Within the range of allowable axial load
- Rated operation (rated torque and rated rotation speed)
- Installation as specified in this manual
- Operation is not repeated with the motor shaft rotation at an angle of 45° or less, which causes the fretting.

Oil seal can be replaced for repair.

When the Servomotor is used for a belt hook such as timing pulley, the radial load during motor operation is generally two or more times the static load. Consult with the belt and pulley manufacturers to adjust designs and system settings so that the motor allowable axial load is not exceeded even during operation. If the Servomotor is used under a shaft load that exceeds the allowable limit, the motor shaft can be broken and the bearings can be damaged.

Additional Information

If the Encoder Lifetime Warning occurs, we recommend you to replace the encoder within a few weeks.

If the encoder has failures due to impact on its shafts, the warning occurs.

13-4 Method for Ring Disconnection Maintenance and Inspection

This section takes the following example of a configuration in which the ring is disconnected between Servo Drive A and B, and describes how to perform inspection and how to replace the Servo Drive.

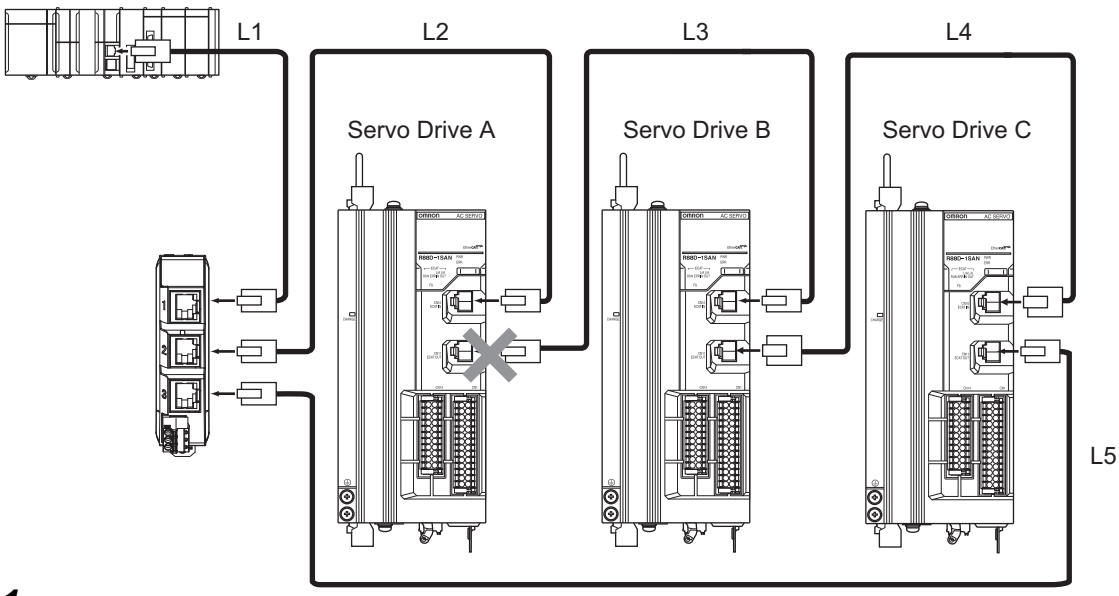

1 Identify where the ring is disconnected.

- With a tool such as support software, find the node address of the Servo Drive breaking the ring. For the NJ/NX-series Controller, check the *_EC_RingBreakNodeAdr* system-defined variable that will provide you with the node address of Servo Drive A. Check that the L/A OUT indicator of Servo Drive A and the L/A IN indicator of Servo Drive B are OFF.

2 Reconnect the EtherCAT communications cable between Servo Drive A and B.

- Stop operation and turn OFF the power supply to the EtherCAT master and to the slaves.
- After the charge lamps of Servo Drive A and B turn OFF, reconnect the EtherCAT communications cable, and then turn ON the control power supply to Servo Drive A and B.
- If the L/A OUT indicator of Servo Drive A and the L/A IN indicator of Servo Drive B are ON, the ring disconnection status has been fixed.
- If the L/A IN and L/A OUT indicators are OFF, the ring disconnection status has not been fixed yet. Move on to the next step.

3 Replace the relevant cable with a new EtherCAT communications cable.

- Replace the EtherCAT communications cable between Servo Drive A and B with a new cable. To avoid incorrect wiring, do not remove any other cable.
- If the L/A OUT indicator of Servo Drive A and the L/A IN indicator of Servo Drive B are ON or blink, the ring disconnection status has been fixed.
- If the L/A IN and L/A OUT indicators are OFF, Servo Drive A or B is faulty. Move on to the next step.

4 Identify the faulty Servo Drive.

- As in the following figure, connect one EtherCAT communications cable to the ECAT IN and ECAT OUT connectors on Servo Drive A. If the L/A IN and L/A OUT indicators remain OFF, Servo Drive A is faulty.
- In the same way, connect one EtherCAT communications cable to the ECAT IN and ECAT OUT connectors on Servo Drive B. If the L/A IN and L/A OUT indicators remain OFF, Servo Drive B is faulty.

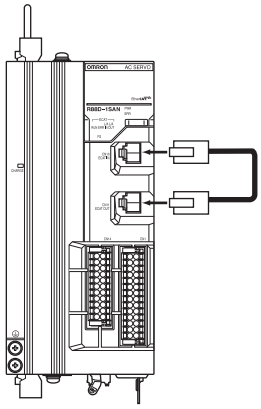

5 Replace the identified faulty Servo Drive.

- Back up the parameters of the Servo Drive.
- Turn OFF the control power supply, and replace the Servo Drive. Then, turn ON the control power supply, write the backup of the parameters, and turn OFF the control power supply.

6 Turn ON the power supply to the devices, and then establish EtherCAT communications.

- Connect the EtherCAT communications cables correctly, and turn ON the power supply to the EtherCAT master and to the slaves.

Precautions for Correct Use

When the ring disconnection status occurs and then you reconnect an EtherCAT communications cable, turn OFF the power supply to the EtherCAT master and to the slaves. Connecting a faulty EtherCAT communications cable while the devices are in operation may stop the entire EtherCAT communications system.

A

Appendices

The appendices provide explanation for the profile that is used to control the Servo Drive, lists of objects, and Sysmac error status codes.

A-1 CiA 402 Drive Profile A-2
A-1-1 Controlling the State Machine of the Servo Drive A-2
A-1-2 Modes of Operation A-4
A-1-3 Modes of Operation and Applied/Adjustment Functions A-5
A-1-4 Changing the Mode of Operation A-5
A-1-5 Homing Mode Specifications A-7

A-2 CoE Objects A-12
A-2-1 Object Dictionary Area A-12
A-2-2 Data Type A-12
A-2-3 Object Description Format A-13
A-2-4 Communication Objects A-14
A-2-5 PDO Mapping Objects A-19
A-2-6 Sync Manager Communication Objects A-34
A-2-7 Manufacturer Specific Objects A-38
A-2-8 Servo Drive Profile Object A-41
A-2-9 Safety Function Objects A-61

A-3 Object List A-77

A-4 Sysmac Error Status Codes A-116
A-4-1 Error List A-116
A-4-2 Error Descriptions A-132

A-5 Use Case of Safety Function A-207
A-5-1 Function to Stop Servomotor A-207
A-5-2 Monitoring Function A-218
A-5-3 Function block for 1S-series Servo Drives Advance Type A-229

A-6 Response Time in EtherCAT Process Data Communications A-238
A-6-1 Input Response Time A-238
A-6-2 Output Response Time A-238

A-7 Version Information A-239
A-7-1 Relationship between Unit Versions and Sysmac Studio Versions A-239

A-1 CiA 402 Drive Profile

This section describes the profile that is used to control the Servo Drive.

A-1-1 Controlling the State Machine of the Servo Drive

The state of 1S-series Servo Drives Advance Type with built-in EtherCAT communications supporting safety functions is called “PDS state.”

The PDS state is controlled by **Controlword** (6040 hex).

Each PDS state is shown in **Statusword** (6041 hex).

State Machine

The state of an 1S-series Servo Drive Advance Type changes as shown below.

Each ☐ box indicates a state, while numbers 2 to 10 and 15 indicate the state control commands.

Refer to *State Descriptions* on page A-3 for details on the states, and *State Control Commands* on page A-3 for details on the state control.

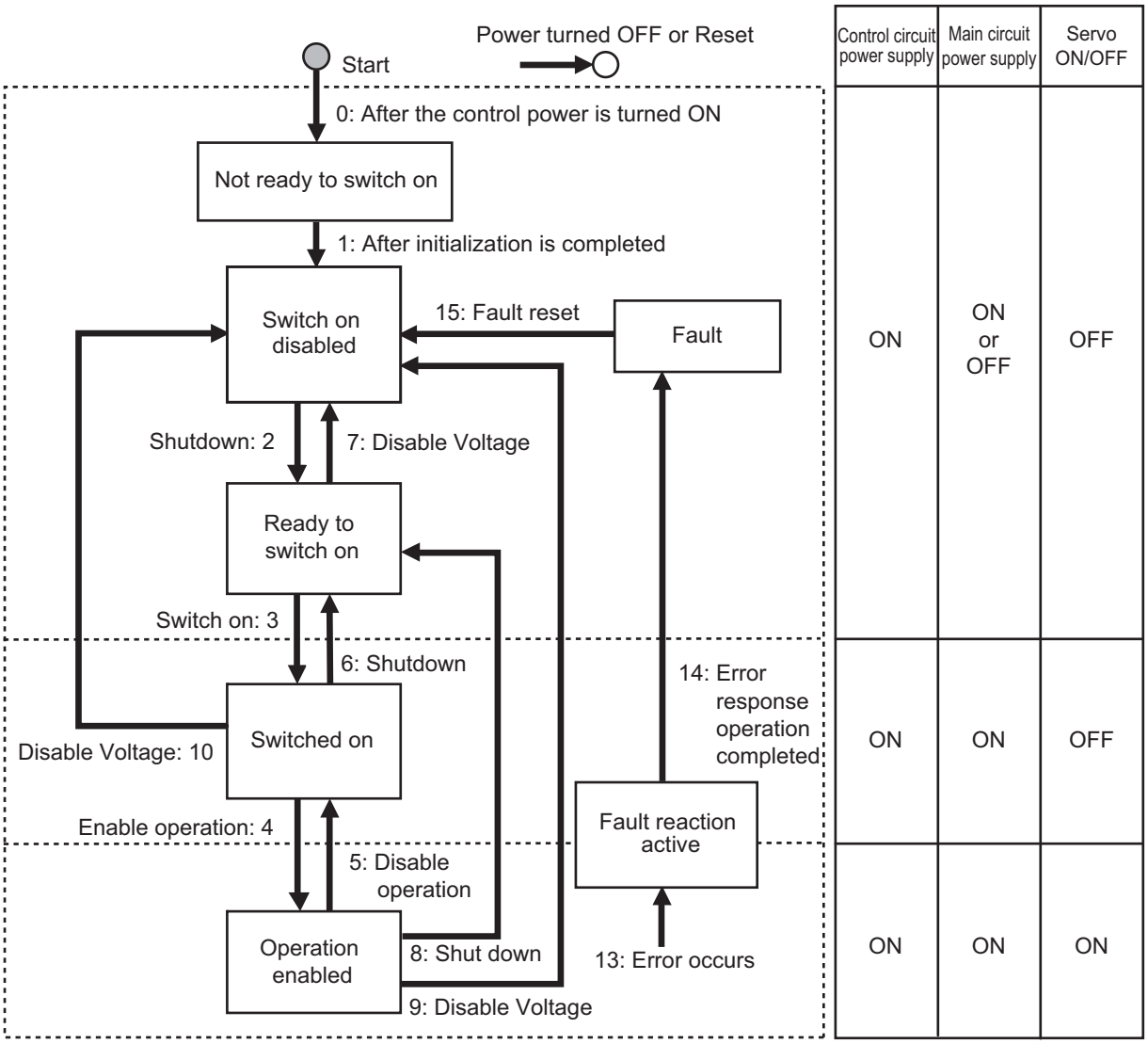

Note Quick stop active state is not supported. Even if a Quick stop command is received, it will be ignored.

State Descriptions

Status	Description
Not ready to switch on	The control circuit power supply is turned ON and initialization is in progress.
Switch on disabled	Initialization is completed. Servo Drive parameters can be set.
Ready to switch on	The main circuit power supply can be turned ON. Servo Drive parameters can be set.
Switched on	The main circuit power supply is ON. (Servo ready) Servo Drive parameters can be set.
Operation enabled	The Servo is ON. Servo Drive parameters can be set.
Fault reaction active	There was an error in the Servo Drive and the cause determination is in progress. Servo Drive parameters can be set.
Fault	There is an error in the Servo Drive. Servo Drive parameters can be set.

State Control Commands

State is controlled by combining the bits in **Controlword** (6040 hex) as shown in the following table.

fr = fault reset, eo = enable operation, qs = quick stop, ev = enable voltage, so = switch on

Command	Controlword bit					Move to
	Bit 7 fr	Bit 3 eo	Bit 2 qs	Bit 1 ev	Bit 0 so	
Shutdown	Disabled	Disabled	1	1	0	2, 6, 8
Switch on	Disabled	0	1	1	1	3
Switch on + enable operation	Disabled	1	1	1	1	3 + 4*1
Disable voltage	Disabled	Disabled	Disabled	0	Disabled	7, 9, 10
Quick stop	Disabled	Disabled	0	1	Disabled	Disabled*2
Disable operation	Disabled	0	1	1	1	5
Enable operation	Disabled	1	1	1	1	4
Fault reset	0 → 1*3	Disabled	Disabled	Disabled	Disabled	15

*1. The state automatically moves to Operation enabled state after Switched On state.

*2. Quick stop commands are not supported. Even if this command is received, it will be ignored.

*3. Bit 7: Operation when the Fault Reset bit turns ON

Fault state : Errors are reset and the Servo Drive returns to the Switch On Disabled state.
: If Warning (6041 hex: Statusword bit 7) is ON, it is reset.

State other than Fault State : If Warning (6041 hex: Statusword bit 7) is ON, it is reset.
: The state will change according to command bits 0 to 3.

State Coding

State is indicated by the combination of bits in **Statusword** (6041 hex), as shown in the following table.

Status	Bit 6 sod*1	Bit 5 qs*2	Bit 4 ve*3	Bit 3 f*4	Bit 2 oe*5	Bit 1 so*6	Bit 0 rtso*7
Not ready to switch on	0	0	Dis-abled	0	0	0	0
Switch on disabled	1	1	Dis-abled	0	0	0	0
Ready to switch on	0	1	Dis-abled	0	0	0	1
Switched on	0	1	Dis-abled	0	0	1	1
Operation enabled	0	1	Dis-abled	0	1	1	1
Fault reaction active	0	1	Dis-abled	1	1	1	1
Fault	0	1	Dis-abled	1	0	0	0

*1. sod = switch on disabled

*2. qs = quick stop

*3. ve = voltage enabled

*4. f = fault

*5. oe = operation enabled

*6. so = switched on

*7. rtso = ready to switch on

A-1-2 Modes of Operation

1S-series Servo Drives Advance Type with built-in EtherCAT communications supporting safety functions support the following modes of operation.

Modes of operation	Description
csp	Cyclic synchronous position mode
csv	Cyclic synchronous velocity mode
cst	Cyclic synchronous torque mode
pp	Profile position mode
pv	Profile velocity mode
hm	Homing mode

The operation mode is set in **Modes of operation** (6060 hex). It is also given in **Modes of operation display** (6061 hex).

You can check the operation modes supported by the Servo Drive with **Supported drive modes** (6502 hex).

If an unsupported operation mode is specified, a Command Warning will occur.

A-1-3 Modes of Operation and Applied/Adjustment Functions

The relationships between the modes of operation of 1S-series Servo Drives with built-in EtherCAT communications supporting safety functions and the applied/adjustment functions are shown below.

Function	Modes of operation		
	csp pp hm	csv pv	cst
Notch filter	Supported	Supported	Supported
Damping filter	Supported	Not supported	Not supported
Velocity feed-forward function	Supported	Not supported	Not supported
Torque feed-forward function	Supported	Supported	Not supported
Position Command Filter	Supported	Not supported	Not supported
Velocity Command Filter	Not supported	Supported	Not supported
Torque command filter	Supported	Supported	Supported
Load characteristic estimation function	Supported	Supported	Supported
Friction torque compensation function	Supported	Supported	Not supported
Gain switching function	Supported	Supported	Supported

A-1-4 Changing the Mode of Operation

The operation mode of the 1S-series Servo Drives Advance Type with built-in EtherCAT communications supporting safety functions is changed as described below.

Changing the Mode of Operation

The operation mode of the Servo Drive is changed by setting the operation mode from the controller, and the Servo Drive can operate the Servomotor.

To change the operation mode, change the set value of **Modes of operation** (6060 hex).

The operation mode is changed within two communication cycles after the set value is changed. When the Homing mode (hm) is changed to another operation mode, the operation mode is changed within 2 ms after the set value is changed.

When you change the operation mode, also change the command value of the object mapped to the RxPDO.

For example, in Cyclic synchronous position mode (csp), which is a position control mode, **Target Position** (607A hex) is enabled as the command value, whereas in Cyclic synchronous velocity mode (csv), which is a velocity control mode, **Target velocity** (60FF hex) is enabled as the command value.

Therefore, when the operation mode changes from the position control mode to the velocity control mode, a valid command value must be set in **Target velocity** (60FF hex) at the same time.

You can check the actual operation mode of the Servo Drive from the **Modes of operation display** (6061 hex).

Changing to an Unsupported Control Mode

If **Modes of operation** (6060 hex) is set to a value other than 0 (nma), 1 (pp), 3 (pv), 6 (hm), 8 (csp), 9 (csv), or 10 (cst), a warning will occur. If a warning occurs, the operation mode is not changed and the current operation mode is retained.

Setting	Operation	Warning
0 (nma)	The current operation mode is retained.	None
1 (pp), 3 (pv), 6 (hm), 8 (csp), 9 (csv), or 10 (cst)	Changed to the specified mode.	None
2, 4, 5, or 7	The current operation mode is retained.	Command Warning
Others	The current operation mode is retained.	Data Setting Warning

Changing to Homing Mode or Profile Position Mode When the Motor Is Running

- If the operation mode is changed to Homing mode during the motor operation, the motor performs the stop operation according to the setting of **Halt option code** (605D hex).
- If a motion command of Homing mode or Profile position mode is input during a deceleration stop operation, the motor starts the Homing operation or Profile position operation.

Precautions in Homing Mode

If you change the operation mode to another mode while the motor is performing the homing operation, a command error will occur.

Modes of Operation Display

You can check the actual operation mode from the **Modes of operation display** (6061 hex).

Bit Displays According to Modes of Operation Display (6061 hex)

Some of the bits in the **Statusword** (6041 hex) are dependent on the operation mode. Their relationship with **Modes of operation display** (6061 hex) is shown in the following table:

Object (hex)	Bit	Modes of operation display (6061 hex)						
		Position control				Velocity control		Torque control
		csp	pp	hm	Not specified	csv	pv	cst
6041	10	Status toggle	Target reached	Target reached	0	Status toggle	Target reached	Status toggle
	12	Target position ignored*1	Acknowl-edge	Home attained	0	Target velocity ignored*1	Speed	Target torque ignored*1
	13	Following error	Following error	Homing error	0	0	0	0

*1. If commands in **Controlword** (6040 hex) are not followed when the Servo is ON, this bit will be *0* (ignored). For details, see the following *Example of Servo OFF during Operation in csp*, *csv*, or *cst*.

A-1-5 Homing Mode Specifications

This section describes the specifications of the Homing mode of the 1S-series Servo Drives Advance Type with built-in EtherCAT communications supporting safety functions.

Homing Mode Configuration

The configuration of the Homing mode is as follows:

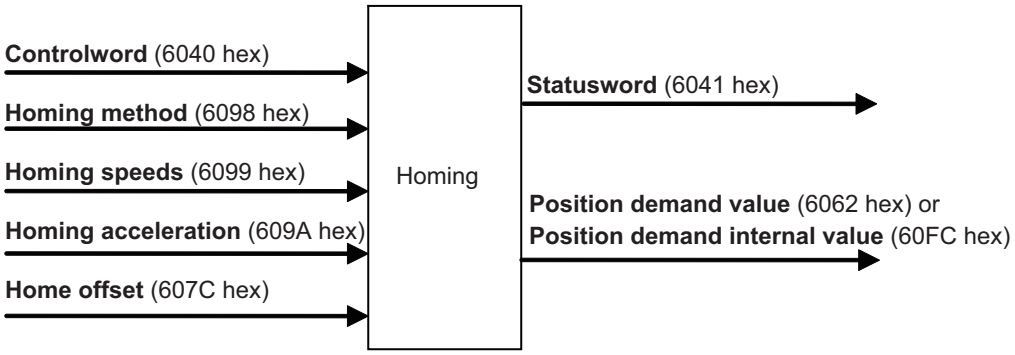

Supported Homing Methods

The following homing methods are supported by 1S-series Servo Drives Advance Type with built-in EtherCAT communications supporting safety functions:

Homing method	Description	Reference
0	Not specified	–
8	Homing by Home Proximity Input and home signal (positive operation start)	P. A-9
12	Homing by Home Proximity Input and home signal (negative operation start)	P. A-9
19	Homing without home signal (positive operation start)	P. A-10
20	Homing without home signal (negative operation start)	P. A-10
33	Homing with home signal (negative operation start)	P. A-11
34	Homing with home signal (positive operation start)	P. A-11
37	Present home preset	P. A-11

You can check the homing method supported by the Servo Drive in **Supported homing methods** (60E3 hex).

Related Objects

Index (hex)	Subindex (hex)	Name	Access	Size	Unit	Setting range	Default setting
6040	00	Controlword	W	U16	---	0 to FFFF hex	0000 hex
6060	00	Modes of operation	W	INT8	---	0 to 10	0
6098	00	Homing method	RW	INT8	---	1 to 37	0
6099	01	Speed during search for switch	RW	U32	Command unit/s	1 to 2,147,483,647	625
	02	Speed during search for zero	RW	U32	Command unit/s	1 to 2,147,483,647	625
6041	00	Statusword	RO	U16	---	---	---

Index (hex)	Subindex (hex)	Name	Access	Size	Unit	Setting range	Default setting
609A	00	Homing accelera-tion	RW	U32	Command unit/s^2	1 to 2,147,483,647	125,000
607C	00	Home offset	RW	INT32	Command unit	-2,147,483,648 to 2,147,483,647	0
60FC	00	Position demand internal value	RO	INT32	Encoder unit	---	---
6062	00	Position demand value	RO	INT32	Command unit	---	---

Controlword (6040 hex) in Homing Mode

Bit	Name	Value	Description
4	Homing operation start	0	Do not start homing procedure.
		1	Start or continue homing procedure.*1
8	Halt	0	Enable bit 4.
		1	Stop axis according to the **Halt option code** (605D hex).

*1. A Command Warning (Error No. B1 .00) will occur if the Homing operation start command is given while the homing procedure is performed.

Bit 6 is not used. For details on other bits, refer to **Controlword** (6040 hex).

Statusword (6041 hex) in Homing Mode

Bit	Name	Description
10	Target reached	The status of the homing operation is indicated by the combination of these bits. The status based on the combination of the bits are shown in the following table.
12	Homing attained	
13	Homing error	

Bit 13	Bit 12	Bit 10	Description
0	0	0	Homing procedure is in progress.
0	0	1	Homing procedure is interrupted or not started.
0	1	0	Homing is attained, but target is not reached.
0	1	1	Homing procedure is completed successfully.
1	0	0	Homing error occurred, velocity is not 0.
1	0	1	Homing error occurred, velocity is 0.
1	1	0	Reserved
1	1	1	Reserved

Homing Operation

This section describes the operation of the supported homing methods.

Homing Methods 8 and 12: Homing by Home Proximity Input and Home Signal

These Homing methods use the Home Proximity Input that is enabled only in some parts of the drive range, and stop the motor when the home signal is detected.

The home signal is detected in the positive direction for Homing method 8 and in the negative direction for Homing method 12.

The operation start direction of the homing operation is as follows: When the Home Proximity Input is OFF, it is the same as the direction in which the home signal is detected. When the Home Proximity Input is ON, it is opposite to the direction in which the home signal is detected.

The operation direction reverses by the positive drive prohibition input.

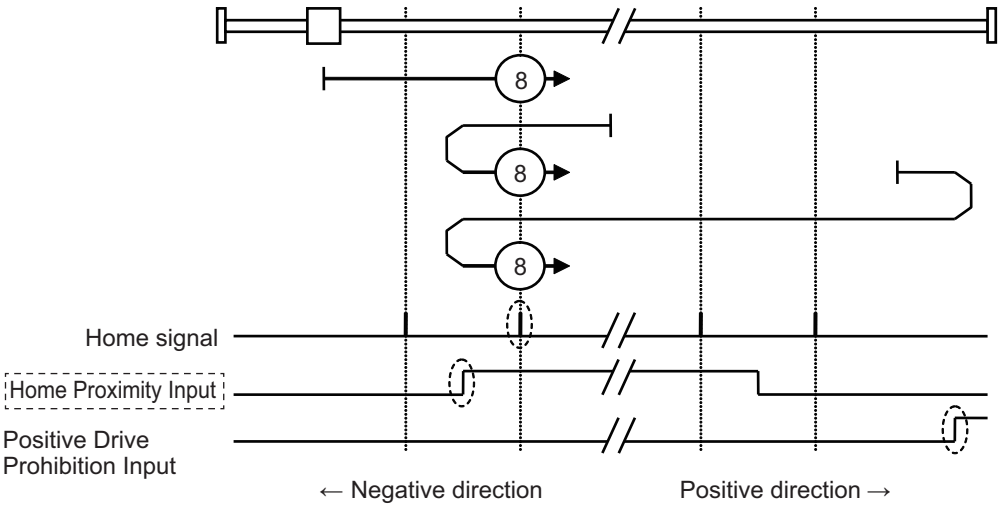

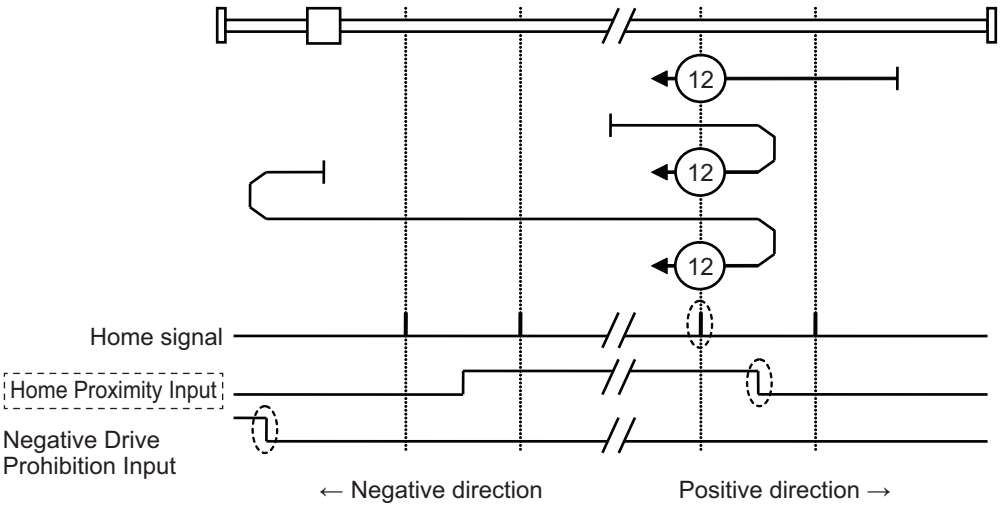

A homing error occurs in the following cases. (Home error = 1)

- If the drive prohibition inputs in both directions are ON at the same time.
- If the drive prohibition input in one direction is ON, and the drive prohibition input in the opposite direction is turned ON although the rising edge of the Home Proximity Input is not detected.
- If the rising edge of the Home Proximity Input is detected in the home detection direction and then the drive prohibition input turns ON before the home signal is detected

Precautions for Correct Use

- If the home signal exists near the point where the Home Proximity Input turns ON or OFF, the first home signal after the Home Proximity Input is turned ON or OFF may not be detected. Set the Home Proximity Input so that the home signal occurs away from the point where the home Proximity Input turns ON /OFF.
- During the homing operation, the stop function for **Drive Prohibition** - **Stop Selection** is disabled.

Homing Methods 19 and 20: Homing without Home Signal

In these homing methods, only the Home Proximity Input is used. The Homing method 19 stops the homing operation when the Home Proximity Input turns OFF, and the Homing method 20 stops the homing operation when the Home Proximity Input turns ON.

The operation start direction of the homing operation is the positive direction when the Home Proximity Input is OFF, and the negative direction when the Home Proximity Input is ON.

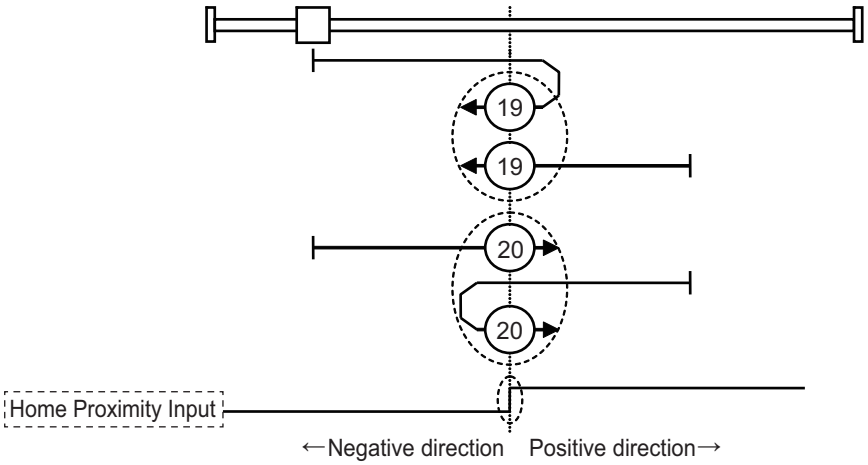

A homing error occurs in the following cases. (Home error = 1)

- If the drive prohibition inputs in both directions are ON at the same time.
- If turning ON or OFF of the Home Proximity Input is not detected before the drive prohibition input in the drive direction turns ON.

Precautions for Correct Use

During the homing operation, the stop function for **Drive Prohibition** - **Stop Selection** is disabled.

Homing Method 33 and 34: Homing with Home Signal

In these homing methods, only the Home signal is used.

The operation start direction of the homing operation is the negative direction when the homing method is 33, and the positive direction when the homing method is 34.

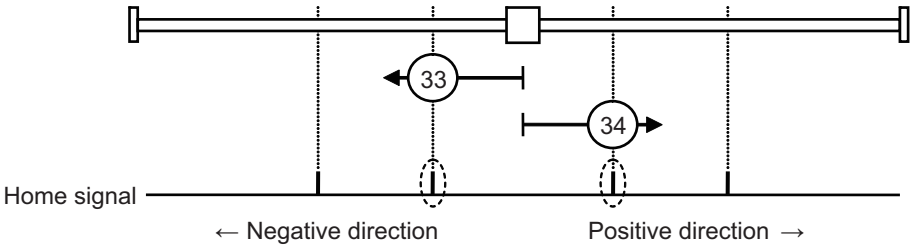

A homing error occurs in the following cases. (Home error = 1)

- If the drive prohibition inputs in both directions are ON at the same time.
- If the home signal is not detected before the drive prohibition input in the drive direction turns ON.

Precautions for Correct Use

During the homing operation, the stop function for **Drive Prohibition** - **Stop Selection** is disabled.

Homing Method 37: Present Home Preset

In this Homing method, the value of **Home offset** is considered as the present position.

You can use this method even when you are using an absolute encoder, but the position is not saved in **Home offset** (607C hex). When the control power is turned OFF or when Unit Restart is executed, the home set by this Homing method is disabled.

You can execute this Homing method only when the Modes of operation is set to Homing mode (hm) and in the Servo ON state.

A-2 CoE Objects

This section explains the CoE objects implemented in 1S-series Servo Drives Advance Type.

A-2-1 Object Dictionary Area

CAN application protocol over EtherCAT (CoE) uses the object dictionary as its base. All objects are assigned four-digit hexadecimal indexes in the areas shown in the following table.

Index (hex)	Area	Description
0000 to 0FFF	Data Type Area	Definitions of data types.
1000 to 1FFF	CoE Communications Area	Definitions of objects that can be used by all servers for designated communications.
2000 to 2FFF	Manufacturer Specific Area 1	Objects with common definitions for all OMRON products.
3000 to 5FFF	Manufacturer Specific Area 2	Objects with common definitions for all 1S-series Servo Drives (servo parameters).
6000 to DFFF	Device Profile Area	Objects defined in the Servo Drive's CiA402 drive profile.
E000 to EFFF	Device Profile Area 2	Objects defined in the Servo Drive's FSoE CiA402 slave connection.
F000 to FFFF	Device Area	Objects defined in a device.

A-2-2 Data Type

Data types shown in the following table are used in this profile.

Data type	Code	Size	Range
Boolean	BOOL	1 bit	0 to 1
Unsigned 8	U8	1 byte	0 to 255
Unsigned 16	U16	2 bytes	0 to 65,535
Unsigned 32	U32	4 bytes	0 to 4,294,967,295
Unsigned 64	U64	8 bytes	0 to 18,446,744,073,709,551,615
Integer 8	INT8	1 byte	-128 to 127
Integer 16	INT16	2 bytes	-32,768 to 32,767
Integer 32	INT32	4 bytes	-2,147,483,648 to 2,147,483,647
Visible string	VS	---	---
Octet string	OS	---	---

A-2-3 Object Description Format

In this manual, objects are described in the following format.

Index (hex)	Subindex (hex)	Object name	Setting range	Unit	Default setting	Data attri-bute	Size	Access	PDO map	Complete access	Modes of operation
<Index>	<Subindex>	<Object name>	<Range>	<Unit>	<Default>	<Attri-bute>	<Size>	<Access>	<PDO map>	<Complete access>	<Modes of operation>

Data is indicated in pointed brackets <>. Details on data are as follows.

Item	Description
Index	Object index given by a four-digit hexadecimal number.
Subindex	Object subindex given by a two-digit hexadecimal number.
Object name	The object name. For a subindex, the subindex name is given.
Setting range	Indicates the range of data that can be set for a writable object.
Unit	Physical units.
Default setting	Default value set before shipment.
Data attribute	The timing when a change in the contents is updated for a writable object. A: Always updated D: Possible to change only when the EtherCAT communications state is Pre-Operational S: Possible to change by Safety Controller setting tools. The changes are reflected when FSoE connection established. E: Servo ON R: Updated after the control power is reset or restarted –: Write prohibited
Size	Gives the object size.
Access	Indicates whether the object is to read only, or read and write. RO: Read only RW: Read and write (Saved in non-volatile memory) W: Read and write (Not saved in non-volatile memory)
PDO map	Indicates the PDO mapping attribute. RxPDO: Reception PDOs can be mapped TxPDO: Transmission PDOs can be mapped –: PDOs cannot be mapped
Complete access	Indicates whether Complete access is allowed or not.
Modes of operation	The profile mode in which the object is enabled. –: Independent of the Modes of operation csp: Cyclic synchronous position mode csv: Cyclic synchronous velocity mode cst: Cyclic synchronous torque mode pp: Profile position mode pv: Profile velocity mode hm: Homing mode

A-2-4 Communication Objects

Index (hex)	Sub-index (hex)	Object name	Setting range	Unit	Default setting	Data attri-bute	Size	Access	PDO map	Com-plete access	Modes of operation
1000	---	Device Type	---	---	000A0192 hex	---	4 bytes (U32)	RO	---	Not possible	---

- Gives the CoE device profile number.

● Description of Set Values

Bit	Name	Description
0 to 15	Device profile number	402 (192 hex): Drive Profile
16 to 23	Type	0A: Servo Drive (with safety function)
24 to 31	Mode	0: Manufacturer specific

Index (hex)	Sub-index (hex)	Object name	Setting range	Unit	Default setting	Data attri-bute	Size	Access	PDO map	Com-plete access	Modes of operation
1001	---	Error Register	---	---	0	---	1 byte (U8)	RO	---	Not possible	---

- Gives the error type that has occurred in the Servo Drive.

● Description of Set Values

Bit	Description	Bit	Description
0	Generic error	4	Communication error (unsupported)
1	Current error (unsupported)	5	Device profile specific error (unsupported)
2	Voltage error (unsupported)	6	Reserved
3	Temperature error (unsup-ported)	7	Manufacturer specific error (unsupported)

Index (hex)	Sub-index (hex)	Object name	Setting range	Unit	Default setting	Data attri-bute	Size	Access	PDO map	Com-plete access	Modes of operation
1008	---	Manufacturer Device Name	---	---	*1	---	20 bytes (VS)	RO	---	Not possible	---

*1. The following table shows the default settings.

Specifications		Model
Single-phase/ 3-phase 200 VAC	200 W	R88D-1SAN02H-ECT
	400 W	R88D-1SAN04H-ECT
	750 W	R88D-1SAN08H-ECT
	1.5 kW	R88D-1SAN15H-ECT
3-phase 200 VAC	1 kW	R88D-1SAN10H-ECT
	2 kW	R88D-1SAN20H-ECT
	3 kW	R88D-1SAN30H-ECT
3-phase 400 VAC	1 kW	R88D-1SAN10F-ECT
	1.5 kW	R88D-1SAN15F-ECT
	2 kW	R88D-1SAN20F-ECT
	3 kW	R88D-1SAN30F-ECT

- Gives the Servo Drive model number.

Index (hex)	Sub-index (hex)	Object name	Setting range	Unit	Default setting	Data attri-bute	Size	Access	PDO map	Com-plete access	Modes of operation
1009	---	Manufacturer Hardware Ver-sion	---	---	---	---	20 bytes (VS)	RO	---	Not possible	---

- Gives the version of the Servo Drive hardware.

Index (hex)	Sub-index (hex)	Object name	Setting range	Unit	Default setting	Data attri-bute	Size	Access	PDO map	Com-plete access	Modes of operation
100A	---	Manufacturer Software Ver-sion	---	---	---	---	20 bytes (VS)	RO	---	Not possible	---

- Gives the version of the Servo Drive software.

Index (hex)	Sub-index (hex)	Object name	Setting range	Unit	Default setting	Data attri-bute	Size	Access	PDO map	Com-plete access	Modes of operation
1010	---	Store Parame-ters	---	---	---	---	---	---	---	Possible	---
	00	Number of entries	---	---	01 hex	---	1 byte (U8)	RO	---	---	---
	01	Store Parame-ters	00000000 to FFFFFFFF hex	---	00000001 hex	A	4 bytes (U32)	W	---	---	---

- All storable servo parameters are stored in the Servo Drive non-volatile memory.
- Storing is executed only when a specific value is written to subindex 01 hex. This prevents servo parameter values from being stored accidentally.
- The specific value means “save”.

MSB			LSB
e	v	a	s
65 hex	76 hex	61 hex	73 hex

- A value of 00000001 hex (command valid) is given when reading.
- If a value other than 65766173 hex is written, an ABORT code is returned.
- Writing to the non-volatile memory may take up to 10 seconds when all objects are changed.
- There is a limit to the number of times to write to the non-volatile memory.

Index (hex)	Sub-index (hex)	Object name	Setting range	Unit	Default setting	Data attri-bute	Size	Access	PDO map	Com-plete access	Modes of operation
1011	---	Restore Default Parameters	---	---	---	---	---	---	---	Not possible	---
	00	Number of entries	---	---	03 hex	---	1 byte (U8)	RO	---	---	---
	01	Restore Default Parameters	00000000 to FFFFFFFF hex	---	00000001 hex	A	4 bytes (U32)	W	---	---	---
	03	Restore Default Application Parameters	00000000 to FFFFFFFF hex	---	00000001 hex	A	4 bytes (U32)	W	---	---	---

- Subindex 01 hex Restore Default Parameters can restore the servo parameters and safety settings to their default values by the writing of 64616F6C hex (load). The restored servo parameters are stored in the non-volatile memory.

- Subindex 03 hex Restore Default Application Parameters can restore the servo parameters to their default values by the writing of 64616F6C hex (load). The restored servo parameters are stored in the non-volatile memory.
- A value of 00000001 hex (command valid) is given when reading.
- Reset the control power supply to enable the objects.
- If any of the following operation is attempted, an ABORT code is returned.
  a) Writing other than the specific value.
  b) Writing in the Operation enabled state.
- Writing to the non-volatile memory may take up to 10 seconds. This is when all objects are changed.
- There is a limit to the number of times to write to the non-volatile memory.

Precautions for Correct Use

- When you use the Safety function via EtherCAT communications,confirm that the security function of EtherCAT master is enabled, and then execute **Restore Default Parameters** (subindex 01 hex) so that the PDO mapping is not changed.
- Use the Operation Authority Verification function in the NJ/NX-series CPU Unit to enable the security function. Set authorities so that synchronization of the transfer operations cannot be operated. Refer to the *Sysmac Studio Version 1 Operation Manual* (Cat. No. W504) for details.

Index (hex)	Sub-index (hex)	Object name	Setting range	Unit	Default setting	Data attri-bute	Size	Access	PDO map	Com-plete access	Modes of operation
1018	---	Identity Object	---	---	---	---	---	---	---	Possible	---
	00	Number of entries	---	---	04 hex	---	1 byte (U8)	RO	---	---	---
	01	Vendor ID	---	---	00000083 hex	---	4 bytes (U32)	RO	---	---	---
	02	Product Code	---	---	Refer to the table.	---	4 bytes (U32)	RO	---	---	---
	03	Revision Number	---	---	Refer to the table.	---	4 bytes (U32)	RO	---	---	---
	04	Serial Number	---	---	Refer to the descrip-tion.	---	4 bytes (U32)	RO	---	---	---

- This object gives the device information.
- Subindex 01 hex **Vendor ID** gives the manufacturer identifier.
- Subindex 02 hex **Product Code** gives the code specific to each model.

Specifications		Model	Product Code
Single-phase/3-phase 200 VAC	200 W	R88D-1SAN02H-ECT	0000 00ED hex
	400 W	R88D-1SAN04H-ECT	0000 00EE hex
	750 W	R88D-1SAN08H-ECT	0000 00EF hex
	1.5 kW	R88D-1SAN15H-ECT	0000 00F1 hex
3-phase 200 VAC	1 kW	R88D-1SAN10H-ECT	0000 00F0 hex
	2 kW	R88D-1SAN20H-ECT	0000 00F2 hex
	3 kW	R88D-1SAN30H-ECT	0000 00F3 hex
3-phase 400 VAC	1 kW	R88D-1SAN10F-ECT	0000 00F4 hex
	1.5 kW	R88D-1SAN15F-ECT	0000 00F5 hex
	2 kW	R88D-1SAN20F-ECT	0000 00F6 hex
	3 kW	R88D-1SAN30F-ECT	0000 00F7 hex

- Subindex 03 hex **Revision Number** gives the device revision number.

Bit	Description
0 to 15	Minor revision number
16 to 31	Major revision number

- Subindex 04 hex **Serial Number** gives the product serial number.

Index (hex)	Sub-index (hex)	Object name	Setting range	Unit	Default setting	Data attribute	Size	Access	PDO map	Complete access	Modes of operation
10E0	---	Node Address Reload	---	---	---	---	---	---	---	Not possible	---
	00	Number of entries	---	---	03 hex	---	1 byte (U8)	RO	---	---	---
	01	Configured Station Alias value	0000 to FFFF hex	---	0	A	2 bytes (U16)	W	---	---	---
	03	ID-Selector validation	0000 to FFFF hex	---	0	A	2 bytes (U16)	W	---	---	---

- This object sets the node address reload function.
- Subindex 01 hex **Configured Station Alias value** is used when the node address is set and updated from the master.
- Subindex 03 hex **ID-Selector validation** is used when the node address is set and updated from the rotary switch.

Index (hex)	Sub-index (hex)	Object name	Setting range	Unit	Default setting	Data attribute	Size	Access	PDO map	Complete access	Modes of operation
10F3	---	Diagnosis History	---	---	---	---	---	---	---	Possible	---
	00	Number of entries	---	---	19 hex	---	1 byte (U8)	RO	---	---	---
	01	Maximum Messages	---	---	---	---	1 byte (U8)	RO	---	---	---
	02	Newest Message	---	---	---	---	1 byte (U8)	RO	---	---	---
	03	Newest Acknowledged Message	00 to FF hex	---	00 hex	A	1 byte (U8)	W	---	---	---
	04	New Messages Available	---	---	---	---	1 bit (BOOL)	RO	TxPDO	---	---
	05	Flags	0000 to 003F hex	---	0000 hex	A	2 bytes (U16)	W	---	---	---
	06 to 19	Diagnosis Message 1 to 20	---	---	---	---	30 bytes (OS)	RO	---	---	---

- This object gives up to 20 Diagnosis Messages. It also enables or disables emergency messages.
- Subindex 01 hex **Maximum Messages** gives the number of Diagnosis Messages.
- Subindex 02 hex **Newest Message** gives the subindex where the latest Diagnosis Message is saved.
- Subindex 03 hex **Newest Acknowledged Message** is used to execute the message clear.

Value	Description
0	The slave will clear all messages.
1 to 5	An abort code is returned.
06 to 2D hex	The written value can be read.
2E to FF hex	An abort code is returned.

- Subindex 04 hex **New Messages Available** gives whether there are new messages to be read.

Value	Description
0	No new message to be read.
1	New messages to be read are available.

- Subindex 05 hex **Flags** sets whether or not to notify the Diagnosis History as an emergency message. It is set to 0000 hex (not notify) when power is turned ON. Write 0001 hex to send emergency messages.
- Subindexes 06 to 19 hex **Diagnosis Message 1** to **Diagnosis Message 20** give the Diagnosis History. Diagnosis History is saved in Diagnosis Message 1 to 20 in ascending order. When 20 messages are saved, the 21st message is saved in Diagnosis Message 1 and the sequence starts again.
- The format of the Diagnosis History is shown below.

Item	Data type	Details	
Diag Code	UINT32	Bit 16 to 31: Emergency Error Code Bit 0 to 15: E800 hex	
Flags	UINT16	Bit 8 to 15: 01 hex (number of parameters) Bit 4 to 7: 02 hex (time stamp is based on time distribution)	
		Bit 0 to 3: Type	0: Info message 1: Warning message 2: Error message
Text ID	UINT16	0000 hex: No text ID	
Time Stamp	UINT64	0: No time stamp Not 0: Time stamp	
Flags Parameter 1	UINT16	Bit 12 to 15: 1 hex Bit 0 to 11: 00C hex (size of parameter 1)	
Parameter 1	ARRAY (0.4) OF BYTE	Contents of Sysmac Minor Fault (2004 hex) and Sysmac Observation (2003 hex)	

- The time stamp is recorded based on the time information that is obtained from the NJ/NX-series CPU Unit. If the time information cannot be obtained from the NJ/NX-series CPU Unit, the time stamp on the Sysmac Studio will be displayed as “1970/1/1 0:00:00”. The time stamp of a Diagnosis Message that is saved before the time information is obtained from the NJ/NX-series CPU Unit will also be displayed as “1970/1/1 0:00:00”.

Index (hex)	Sub-index (hex)	Object name	Setting range	Unit	Default setting	Data attribute	Size	Access	PDO map	Complete access	Modes of operation
10F9	---	Present Time for Event Log	---	---	---	---	---	---	---	Possible	---
	00	Number of entries	---	---	01 hex	---	1 byte (U8)	RO	---	---	---
	01	Present Time for Event Log	0 to 18,446,744,073,709,551,615	---	0	A	8 bytes (U64)	W	---	---	---

- Subindex 01 hex **Present Time for Event Log** stores the time information that is distributed by the EtherCAT master, and uses it for time stamp of the event log, i.e., Diagnosis Message.

A-2-5 PDO Mapping Objects

Indexes 1600 to 17FF hex are used for receive PDO mapping and indexes 1A00 to 1BFF hex are used for transmit PDO mapping.

Subindexes after subindex 01 hex provide information about the mapped application object.

31 16	15 8	7 0
Index	Sub index	Bit length
MSB		LSB

Bits 16 to 31 : Index of the mapped object
Bits 8 to 15 : Subindex of the mapped object
Bits 0 to 7 : Bit length of the mapped object
For example, for 32 bits, 20 hex is given.

Index (hex)	Sub-index (hex)	Object name	Setting range	Unit	Default setting	Data attri-bute	Size	Access	PDO map	Com-plete access	Modes of operation
1600	---	1st receive PDO Mapping	---	---	---	---	---	---	---	Possible	---
	00	Number of objects in this PDO	00 to 0A hex	---	03 hex	A	1 byte (U8)	W	---	---	---
	01	1st Output Object to be mapped	---	---	60400010 hex	A	4 bytes (U32)	W	---	---	---
	02	2nd Output Object to be mapped	---	---	607A0020 hex	A	4 bytes (U32)	W	---	---	---
	03	3rd Output Object to be mapped	---	---	60B80010 hex	A	4 bytes (U32)	W	---	---	---
	04	4th Output Object to be mapped	---	---	00000000 hex	A	4 bytes (U32)	W	---	---	---
	05	5th Output Object to be mapped	---	---	00000000 hex	A	4 bytes (U32)	W	---	---	---
	06	6th Output Object to be mapped	---	---	00000000 hex	A	4 bytes (U32)	W	---	---	---
	07	7th Output Object to be mapped	---	---	00000000 hex	A	4 bytes (U32)	W	---	---	---
	08	8th Output Object to be mapped	---	---	00000000 hex	A	4 bytes (U32)	W	---	---	---
	09	9th Output Object to be mapped	---	---	00000000 hex	A	4 bytes (U32)	W	---	---	---
	0A	10th Output Object to be mapped	---	---	00000000 hex	A	4 bytes (U32)	W	---	---	---

- You can change these objects only when the EtherCAT communications state is Pre-Operational.
- The mapping you changed is not saved in the non-volatile memory. To use the mapping other than the default setting, specify objects each time you turn ON the power supply.
- You can map up to 10 objects in a PDO mapping. If you attempt to map 11 or more objects, an RxPDO Setting Error (Error. No. 90.5) will occur.
- The communications cycle you can set varies depending on the total size of mapped objects. For details, refer to *A-1-3 Modes of Operation and Applied/Adjustment Functions* on page A-5.
- If the same object is mapped more than once, the value of the last object is used.
- If any of the following operation is attempted, an ABORT code is returned.
  a) Writing when the EtherCAT communications state is Safe-Operational or Operational
  b) Writing with non-existent objects specified
  c) Writing with incorrect object size specified
  d) Writing with objects that cannot be mapped in the PDO mapping specified

- You can map the following objects to the receive PDO mapping.

Index (hex)	Subindex (hex)	Bit length (hex)	Object name
3112	E1	20	ODF Velocity Feed-forward - Gain
	E2	20	ODF Velocity Feed-forward - LPF Cutoff Frequency
3113	E1	20	ODF Torque Feed-forward - Gain
	E2	20	ODF Torque Feed-forward - LPF Cutoff Frequency
3213	E1	20	1st Position Control Gain - Proportional Gain
3214	E1	20	2nd Position Control Gain - Proportional Gain
3223	E1	20	1st Velocity Control Gain - Proportional Gain
	E2	20	1st Velocity Control Gain - Integral Gain
3224	E1	20	2nd Velocity Control Gain - Proportional Gain
	E2	20	2nd Velocity Control Gain - Integral Gain
3233	E1	20	1st Torque Command Filter - Cutoff Frequency
3234	E1	20	2nd Torque Command Filter - Cutoff Frequency
6040	00	10	Controlword
6060	00	08	Modes of operation
6071	00	10	Target torque
6072	00	10	Max torque
607A	00	20	Target position
607F	00	20	Max profile velocity
6081	00	20	Profile velocity
6083	00	20	Profile acceleration
6084	00	20	Profile deceleration
60B0	00	20	Position offset
60B1	00	20	Velocity offset
60B2	00	10	Torque offset
60B8	00	10	Touch probe function
60E0	00	10	Positive torque limit value
60E1	00	10	Negative torque limit value
60FE	01	20	Physical outputs
60FF	00	20	Target velocity

Index (hex)	Sub-index (hex)	Object name	Setting range	Unit	Default setting	Data attri-bute	Size	Access	PDO map	Com-plete access	Modes of operation
1610	---	17th receive PDO Mapping	---	---	---	---	---	---	---	Possible	---
	00	Number of objects in this PDO	00 to 13 hex	---	13 hex	S	1 byte (U8)	W	---	---	---
	01	1st Output Object to be mapped	---	---	E7000108 hex	S	4 bytes (U32)	W	---	---	---
	02	2nd Output Object to be mapped	---	---	66400001 hex	S	4 bytes (U32)	W	---	---	---
	03	3rd Output Object to be mapped	---	---	66500101 hex	S	4 bytes (U32)	W	---	---	---
	04	4th Output Object to be mapped	---	---	66700101 hex	S	4 bytes (U32)	W	---	---	---
	05	5th Output Object to be mapped	---	---	66680101 hex	S	4 bytes (U32)	W	---	---	---
	06	6th Output Object to be mapped	---	---	00000001 hex	S	4 bytes (U32)	W	---	---	---
	07	7th Output Object to be mapped	---	---	66D00001 hex	S	4 bytes (U32)	W	---	---	---
	08	8th Output Object to be mapped	---	---	66D10001 hex	S	4 bytes (U32)	W	---	---	---
	09	9th Output Object to be mapped	---	---	66320001 hex	S	4 bytes (U32)	W	---	---	---
	0A	10th Output Object to be mapped	---	---	00000001 hex	S	4 bytes (U32)	W	---	---	---
	0B	11th Output Object to be mapped	---	---	00000001 hex	S	4 bytes (U32)	W	---	---	---
	0C	12th Output Object to be mapped	---	---	00000001 hex	S	4 bytes (U32)	W	---	---	---
	0D	13th Output Object to be mapped	---	---	00000001 hex	S	4 bytes (U32)	W	---	---	---
	0E	14th Output Object to be mapped	---	---	00000001 hex	S	4 bytes (U32)	W	---	---	---
	0F	15th Output Object to be mapped	---	---	00000001 hex	S	4 bytes (U32)	W	---	---	---
	10	16th Output Object to be mapped	---	---	00000001 hex	S	4 bytes (U32)	W	---	---	---
	11	17th Output Object to be mapped	---	---	00000001 hex	S	4 bytes (U32)	W	---	---	---
	12	18th Output Object to be mapped	---	---	E7000310 hex	S	4 bytes (U32)	W	---	---	---
	13	19th Output Object to be mapped	---	---	E7000210 hex	S	4 bytes (U32)	W	---	---	---

- This is receive PDO Mapping required when the safety function is used via EtherCAT communications.
- Users set objects assigned into PDO mapping. They can set subindex from 0A hex to 11 hex and eight objects or less.
- Other subindexes are fixed. If a value other than the Default value is mapped, the PDO Mapping error will occur.
- The object can be changed only when the EtherCAT state machine (ESM) is Pre-Operational (Pre-Op).
- The following objects are mapped.

  FSoE Master CMD (E700-01 hex), **STO command** (6640-00 hex), **SS1 command1** (6650-01 hex), **SS2 command1** (6670-01 hex), **SOS command1** (6668-01 hex), **SDI positive direction command** (66D0-00 hex), **SDI negative direction command** (66D1-00 hex), **error acknowledge** (6632-00 hex), **FSoE Master CRC_0** (E700-03 hex), and **FSoE Master Conn_ID** (E700-02 hex)

Index (hex)	Sub-index (hex)	Object name	Setting range	Unit	Default setting	Data attri-bute	Size	Access	PDO map	Com-plete access	Modes of operation
1701	---	258th receive PDO Mapping	---	---	---	---	---	---	---	Possible	---
	00	Number of objects in this PDO	---	---	04 hex	---	1 byte (U8)	RO	---	---	---
	01	1st Output Object to be mapped	---	---	60400010 hex	---	4 bytes (U32)	RO	---	---	---
	02	2nd Output Object to be mapped	---	---	607A0020 hex	---	4 bytes (U32)	RO	---	---	---
	03	3rd Output Object to be mapped	---	---	60B80010 hex	---	4 bytes (U32)	RO	---	---	---
	04	4th Output Object to be mapped	---	---	60FE0120 hex	---	4 bytes (U32)	RO	---	---	---

- This object gives the mapping for an application that uses only the Cyclic synchronous position control (csp).
- The touch probe function is available.
- The following objects are mapped.

  Controlword (6040 hex), **Target position** (607A hex), **Touch probe function** (60B8 hex), and **Physical outputs** (60FE hex)

Index (hex)	Sub-index (hex)	Object name	Setting range	Unit	Default setting	Data attri-bute	Size	Access	PDO map	Com-plete access	Modes of operation
1702	---	259th receive PDO Mapping	---	---	---	---	---	---	---	Possible	---
	00	Number of objects in this PDO	---	---	07 hex	---	1 byte (U8)	RO	---	---	---
	01	1st Output Object to be mapped	---	---	60400010 hex	---	4 bytes (U32)	RO	---	---	---
	02	2nd Output Object to be mapped	---	---	607A0020 hex	---	4 bytes (U32)	RO	---	---	---
	03	3rd Output Object to be mapped	---	---	60FF0020 hex	---	4 bytes (U32)	RO	---	---	---
	04	4th Output Object to be mapped	---	---	60710010 hex	---	4 bytes (U32)	RO	---	---	---
	05	5th Output Object to be mapped	---	---	60600008 hex	---	4 bytes (U32)	RO	---	---	---
	06	6th Output Object to be mapped	---	---	60B80010 hex	---	4 bytes (U32)	RO	---	---	---
	07	7th Output Object to be mapped	---	---	607F0020 hex	---	4 bytes (U32)	RO	---	---	---

- This is the mapping for an application that uses one of the following modes with switching them: Cyclic synchronous position mode (csp), Cyclic synchronous velocity mode (csv), and Cyclic synchronous torque mode (cst).
- The touch probe function is available.
- The following objects are mapped.

  Controlword (6040 hex), **Target position** (607A hex), **Target velocity** (60FF hex), **Target torque** (6071 hex), **Modes of operation** (6060 hex), **Touch probe function** (60B8 hex), and **Max profile velocity** (607F hex)

Index (hex)	Sub-index (hex)	Object name	Setting range	Unit	Default setting	Data attri-bute	Size	Access	PDO map	Com-plete access	Modes of operation
1703	---	260th receive PDO Mapping	---	---	---	---	---	---	---	Possible	---
	00	Number of objects in this PDO	---	---	07 hex	---	1 byte (U8)	RO	---	---	---
	01	1st Output Object to be mapped	---	---	60400010 hex	---	4 bytes (U32)	RO	---	---	---
	02	2nd Output Object to be mapped	---	---	607A0020 hex	---	4 bytes (U32)	RO	---	---	---
	03	3rd Output Object to be mapped	---	---	60FF0020 hex	---	4 bytes (U32)	RO	---	---	---
	04	4th Output Object to be mapped	---	---	60600008 hex	---	4 bytes (U32)	RO	---	---	---
	05	5th Output Object to be mapped	---	---	60B80010 hex	---	4 bytes (U32)	RO	---	---	---
	06	6th Output Object to be mapped	---	---	60E00010 hex	---	4 bytes (U32)	RO	---	---	---
	07	7th Output Object to be mapped	---	---	60E10010 hex	---	4 bytes (U32)	RO	---	---	---

- This is the mapping for an application that uses one of the following modes with switching them: Cyclic synchronous position mode (csp) and Cyclic synchronous velocity mode (csv).

- The touch probe function and torque limit are available.
- The following objects are mapped.

  Controlword (6040 hex), **Target position** (607A hex), **Target velocity** (60FF hex), **Modes of operation** (6060 hex), **Touch probe function** (60B8 hex), **Positive torque limit value** (60E0 hex), and **Negative torque limit value** (60E1 hex)

Index (hex)	Sub-index (hex)	Object name	Setting range	Unit	Default setting	Data attribute	Size	Access	PDO map	Complete access	Modes of operation
1704	---	261th receive PDO Mapping	---	---	---	---	---	---	---	Possible	---
	00	Number of objects in this PDO	---	---	09 hex	---	1 byte (U8)	RO	---	---	---
	01	1st Output Object to be mapped	---	---	60400010 hex	---	4 bytes (U32)	RO	---	---	---
	02	2nd Output Object to be mapped	---	---	607A0020 hex	---	4 bytes (U32)	RO	---	---	---
	03	3rd Output Object to be mapped	---	---	60FF0020 hex	---	4 bytes (U32)	RO	---	---	---
	04	4th Output Object to be mapped	---	---	60710010 hex	---	4 bytes (U32)	RO	---	---	---
	05	5th Output Object to be mapped	---	---	60600008 hex	---	4 bytes (U32)	RO	---	---	---
	06	6th Output Object to be mapped	---	---	60B80010 hex	---	4 bytes (U32)	RO	---	---	---
	07	7th Output Object to be mapped	---	---	607F0020 hex	---	4 bytes (U32)	RO	---	---	---
	08	8th Output Object to be mapped	---	---	60E00010 hex	---	4 bytes (U32)	RO	---	---	---
	09	9th Output Object to be mapped	---	---	60E10010 hex	---	4 bytes (U32)	RO	---	---	---

- This is the mapping for an application that uses one of the following modes with switching them: Cyclic synchronous position mode (csp), Cyclic synchronous velocity mode (csv), and Cyclic synchronous torque mode (cst).
- The touch probe function and torque limit are available.
- The following objects are mapped.

  Controlword (6040 hex), **Target position** (607A hex), **Target velocity** (60FF hex), **Target torque** (6071 hex), **Modes of operation** (6060 hex), **Touch probe function** (60B8 hex), **Max profile velocity** (607F hex), **Positive torque limit value** (60E0 hex), and **Negative torque limit value** (60E1 hex)

Index (hex)	Sub-index (hex)	Object name	Setting range	Unit	Default setting	Data attri-bute	Size	Access	PDO map	Com-plete access	Modes of operation
1705	---	262th receive PDO Mapping	---	---	---	---	---	---	---	Possible	---
	00	Number of objects in this PDO	---	---	08 hex	---	1 byte (U8)	RO	---	---	---
	01	1st Output Object to be mapped	---	---	60400010 hex	---	4 bytes (U32)	RO	---	---	---
	02	2nd Output Object to be mapped	---	---	607A0020 hex	---	4 bytes (U32)	RO	---	---	---
	03	3rd Output Object to be mapped	---	---	60FF0020 hex	---	4 bytes (U32)	RO	---	---	---
	04	4th Output Object to be mapped	---	---	60600008 hex	---	4 bytes (U32)	RO	---	---	---
	05	5th Output Object to be mapped	---	---	60B80010 hex	---	4 bytes (U32)	RO	---	---	---
	06	6th Output Object to be mapped	---	---	60E00010 hex	---	4 bytes (U32)	RO	---	---	---
	07	7th Output Object to be mapped	---	---	60E10010 hex	---	4 bytes (U32)	RO	---	---	---
	08	8th Output Object to be mapped	---	---	60B20010 hex	---	4 bytes (U32)	RO	---	---	---

- This is the mapping for an application that uses one of the following modes with switching them: Cyclic synchronous position mode (csp) and Cyclic synchronous velocity mode (csv).
- The touch probe function and torque limit are available.
- You can specify the amount of torque feed-forward in **Torque offset** (60B2 hex).
- The following objects are mapped.

  Controlword (6040 hex), **Target position** (607A hex), **Target velocity** (60FF hex), **Modes of operation** (6060 hex), **Touch probe function** (60B8 hex), **Positive torque limit value** (60E0 hex), and **Negative torque limit value** (60E1 hex), and **Torque offset** (60B2 hex)

Index (hex)	Sub-index (hex)	Object name	Setting range	Unit	Default setting	Data attribute	Size	Access	PDO map	Complete access	Modes of operation
1A00	---	1st transmit PDO Mapping	---	---	---	---	---	---	---	Possible	---
	00	Number of objects in this PDO	00 to 0A hex	---	07 hex	D	1 byte (U8)	W	---	---	---
	01	1st Output Object to be mapped	---	---	60410010 hex	D	4 bytes (U32)	W	---	---	---
	02	2nd Output Object to be mapped	---	---	60640020 hex	D	4 bytes (U32)	W	---	---	---
	03	3rd Input Object to be mapped	---	---	60B90010 hex	D	4 bytes (U32)	W	---	---	---
	04	4th Input Object to be mapped	---	---	60BA0020 hex	D	4 bytes (U32)	W	---	---	---
	05	5th Input Object to be mapped	---	---	60BC0020 hex	D	4 bytes (U32)	W	---	---	---
	06	6th Input Object to be mapped	---	---	603F0010 hex	D	4 bytes (U32)	W	---	---	---
	07	7th Input Object to be mapped	---	---	60FD0020 hex	D	4 bytes (U32)	W	---	---	---
	08	8th Output Object to be mapped	---	---	00000000 hex	D	4 bytes (U32)	W	---	---	---
	09	9th Input Object to be mapped	---	---	00000000 hex	D	4 bytes (U32)	W	---	---	---
	0A	10th Input Object to be mapped	---	---	00000000 hex	D	4 bytes (U32)	W	---	---	---

- You can change these objects only when the EtherCAT communications state is Pre-Operational.
- The mapping you changed is not saved in the non-volatile memory. To use the mapping other than the default setting, specify objects each time you turn ON the power supply.
- You can map up to 10 objects in a PDO mapping. If you attempt to map 11 or more objects, an TxPDO Setting Error (Error. No. 90.6) will occur.
- The communications cycle you can set varies depending on the total size of mapped objects. For details, refer to *A-1-3 Modes of Operation and Applied/Adjustment Functions* on page A-5.
- If the same object is mapped more than once, the value of the last object is used.
- If any of the following operation is attempted, an ABORT code is returned.
  a) Writing when the EtherCAT communications state is Safe-Operational or Operational
  b) Writing with non-existent objects specified
  c) Writing with incorrect object size specified
  d) Writing with objects that cannot be mapped in the PDO mapping specified

- You can map the following objects to the transmit PDO mapping.

Index (hex)	Subindex (hex)	Bit length (hex)	Object name
10F3	04	01	Diagnosis History - New Messages Available
2002	01	08	Sysmac Error Status
3000	81	20	Basic Functions - Function Status
3010	87	20	Position Command - Reference Position for csp
3211	83	40	Position Detection - Present Position Time Stamp
3221	82	20	Velocity Detection - Present Motor Velocity
3B30	83	40	Touch Probe 1 - Positive Edge Time Stamp
3B31	83	40	Touch Probe 2 - Positive Edge Time Stamp
4000	81	20	Error Full Code
4110	81	20	Monitor Data via PDO - Monitor Data 1
	82	20	Monitor Data via PDO - Monitor Data 2
	83	20	Monitor Data via PDO - Monitor Data 3
	84	20	Monitor Data via PDO - Monitor Data 4
4130	81	20	Safety Status Monitor - Safety Status
	82	10	Safety Status Monitor - Mirror Safety controlword
	83	10	Safety Status Monitor - Mirror Safety statusword
4150	81	20	Overload - Load Ratio
4310	81	20	Regeneration - Regeneration Load Ratio
4600	81	20	I/O Monitor - Physical I/O
4601	81	20	Function Input - Monitor Input
4F18	00	20	Safety Present Pulse Position
4F19	00	20	Safety Present Position
4F1A	00	20	Safety Present Motor Velocity
603F	00	10	Error code
6041	00	10	Statusword
6061	00	08	Modes of operation display
6062	00	20	Position demand value
6063	00	20	Position actual internal value
6064	00	20	Position actual value
606B	00	20	Velocity demand value
606C	00	20	Velocity actual value
6074	00	10	Torque demand
6077	00	10	Torque actual value
60B9	00	10	Touch probe status
60BA	00	20	Touch probe 1 positive edge
60BC	00	20	Touch probe 2 positive edge
60F4	00	20	Following error actual value
60FA	00	20	Control effort
60FC	00	20	Position demand internal value
60FD	00	20	Digital inputs

Index (hex)	Sub-index (hex)	Object name	Setting range	Unit	Default setting	Data attribute	Size	Access	PDO map	Complete access	Modes of operation
1A10	---	17th transmit PDO Mapping	---	---	---	---	---	---	---	Possible	---
	00	Number of objects in this PDO	00 to 13 hex	---	13 hex	S	1 byte (U8)	W	---	---	---
	01	1st Output Object to be mapped	---	---	E6000108 hex	S	4 bytes (U32)	W	---	---	---
	02	2nd Output Object to be mapped	---	---	66400001 hex	S	4 bytes (U32)	W	---	---	---
	03	3rd Input Object to be mapped	---	---	00000001 hex	S	4 bytes (U32)	W	---	---	---
	04	4th Input Object to be mapped	---	---	00000001 hex	S	4 bytes (U32)	W	---	---	---
	05	5th Input Object to be mapped	---	---	66680101 hex	S	4 bytes (U32)	W	---	---	---
	06	6th Input Object to be mapped	---	---	00000001 hex	S	4 bytes (U32)	W	---	---	---
	07	7th Input Object to be mapped	---	---	66D00001 hex	S	4 bytes (U32)	W	---	---	---
	08	8th Output Object to be mapped	---	---	66D10001 hex	S	4 bytes (U32)	W	---	---	---
	09	9th Input Object to be mapped	---	---	66320001 hex	S	4 bytes (U32)	W	---	---	---
	0A	10th Input Object to be mapped	---	---	00000001 hex	S	4 bytes (U32)	W	---	---	---
	0B	11th Input Object to be mapped	---	---	00000001 hex	S	4 bytes (U32)	W	---	---	---
	0C	12th Input Object to be mapped	---	---	00000001 hex	S	4 bytes (U32)	W	---	---	---
	0D	13th Input Object to be mapped	---	---	00000001 hex	S	4 bytes (U32)	W	---	---	---
	0E	14th Input Object to be mapped	---	---	00000001 hex	S	4 bytes (U32)	W	---	---	---
	0F	15th Input Object to be mapped	---	---	00000001 hex	S	4 bytes (U32)	W	---	---	---
	10	16th Input Object to be mapped	---	---	00000001 hex	S	4 bytes (U32)	W	---	---	---
	11	17th Input Object to be mapped	---	---	E6010101 hex	S	4 bytes (U32)	W	---	---	---
	12	18th Input Object to be mapped	---	---	E6000310 hex	S	4 bytes (U32)	W	---	---	---
	13	19th Input Object to be mapped	---	---	E6000210 hex	S	4 bytes (U32)	W	---	---	---

- This is transmit PDO Mapping required when the safety function is used via EtherCAT communications.
- Users set objects to be assigned. They can set subindex from 0A hex to 10 hex and seven objects or less PDO mapping.
- Other subindexes are fixedas default value. If a value other than the Default value is mapped, the PDO Mapping error will occur.
- The object can be changed only when the EtherCAT state machine (ESM) is Pre-Operational (Pre-Op).
- The following objects are mapped.

  FSoE Slave CMD (E600-01 hex), **STO command** (6640 hex), **SOS command1** (6668-01 hex), **SDI positive direction command** (66D0-00 hex), **SDI negative direction command** (66D1-00 hex), **Safety Connection Status** (E601-01 hex), **FSoE slave CRC_0** (E600-03 hex), and **FSoE slave Conn_ID** (E600-02 hex)

Index (hex)	Sub-index (hex)	Object name	Setting range	Unit	Default setting	Data attri-bute	Size	Access	PDO map	Com-plete access	Modes of operation
1B01	---	258th transmit PDO Mapping	---	---	---	---	---	---	---	Possible	---
	00	Number of objects in this PDO	---	---	09 hex	---	1 byte (U8)	RO	---	---	---
	01	1st Output Object to be mapped	---	---	603F0010 hex	---	4 bytes (U32)	RO	---	---	---
	02	2nd Output Object to be mapped	---	---	60410010 hex	---	4 bytes (U32)	RO	---	---	---
	03	3rd Input Object to be mapped	---	---	60640020 hex	---	4 bytes (U32)	RO	---	---	---
	04	4th Input Object to be mapped	---	---	60770010 hex	---	4 bytes (U32)	RO	---	---	---
	05	5th Input Object to be mapped	---	---	60F40020 hex	---	4 bytes (U32)	RO	---	---	---
	06	6th Input Object to be mapped	---	---	60B90010 hex	---	4 bytes (U32)	RO	---	---	---
	07	7th Input Object to be mapped	---	---	60BA0020 hex	---	4 bytes (U32)	RO	---	---	---
	08	8th Output Object to be mapped	---	---	60BC0020 hex	---	4 bytes (U32)	RO	---	---	---
	09	9th Input Object to be mapped	---	---	60FD0020 hex	---	4 bytes (U32)	RO	---	---	---

- This object gives the mapping for an application that uses only the Cyclic synchronous position control (csp).
- The touch probe function is available.
- The following objects are mapped.

  Error code (603F hex), **Statusword** (6041 hex), **Position actual value** (6064 hex), **Torque actual value** (6077 hex), **Following error actual value** (60F4 hex), **Touch probe status** (60B9 hex), **Touch probe 1 positive edge** (60BA hex), **Touch probe 2 positive edge** (60BC hex), and **Digital inputs** (60FD hex)

Index (hex)	Sub-index (hex)	Object name	Setting range	Unit	Default setting	Data attribute	Size	Access	PDO map	Complete access	Modes of operation
1B02	---	259th transmit PDO Mapping	---	---	---	---	---	---	---	Possible	---
	00	Number of objects in this PDO	---	---	09 hex	---	1 byte (U8)	RO	---	---	---
	01	1st Output Object to be mapped	---	---	603F0010 hex	---	4 bytes (U32)	RO	---	---	---
	02	2nd Output Object to be mapped	---	---	60410010 hex	---	4 bytes (U32)	RO	---	---	---
	03	3rd Input Object to be mapped	---	---	60640020 hex	---	4 bytes (U32)	RO	---	---	---
	04	4th Input Object to be mapped	---	---	60770010 hex	---	4 bytes (U32)	RO	---	---	---
	05	5th Input Object to be mapped	---	---	60610008 hex	---	4 bytes (U32)	RO	---	---	---
	06	6th Input Object to be mapped	---	---	60B90010 hex	---	4 bytes (U32)	RO	---	---	---
	07	7th Input Object to be mapped	---	---	60BA0020 hex	---	4 bytes (U32)	RO	---	---	---
	08	8th Output Object to be mapped	---	---	60BC0020 hex	---	4 bytes (U32)	RO	---	---	---
	09	9th Input Object to be mapped	---	---	60FD0020 hex	---	4 bytes (U32)	RO	---	---	---

- This is the mapping for an application that switches the mode of operation.
- The touch probe function is available.
- The following objects are mapped.

  Error code (603F hex), **Statusword** (6041 hex), **Position actual value** (6064 hex), **Torque actual value** (6077 hex), **Modes of operation display** (6061 hex), **Touch probe status** (60B9 hex), **Touch probe 1 positive edge** (60BA hex), **Touch probe 2 positive edge** (60BC hex), and **Digital inputs** (60FD hex)

Index (hex)	Sub-index (hex)	Object name	Setting range	Unit	Default setting	Data attri-bute	Size	Access	PDO map	Com-plete access	Modes of operation
1B03	---	260th transmit PDO Mapping	---	---	---	---	---	---	---	Possible	---
	00	Number of objects in this PDO	---	---	0A hex	---	1 byte (U8)	RO	---	---	---
	01	1st Output Object to be mapped	---	---	603F 0010 hex	---	4 bytes (U32)	RO	---	---	---
	02	2nd Output Object to be mapped	---	---	6041 0010 hex	---	4 bytes (U32)	RO	---	---	---
	03	3rd Input Object to be mapped	---	---	6064 0020 hex	---	4 bytes (U32)	RO	---	---	---
	04	4th Input Object to be mapped	---	---	6077 0010 hex	---	4 bytes (U32)	RO	---	---	---
	05	5th Input Object to be mapped	---	---	60F4 0020 hex	---	4 bytes (U32)	RO	---	---	---
	06	6th Input Object to be mapped	---	---	6061 0008 hex	---	4 bytes (U32)	RO	---	---	---
	07	7th Input Object to be mapped	---	---	60B9 0010 hex	---	4 bytes (U32)	RO	---	---	---
	08	8th Output Object to be mapped	---	---	60BA 0020 hex	---	4 bytes (U32)	RO	---	---	---
	09	9th Input Object to be mapped	---	---	60BC 0020 hex	---	4 bytes (U32)	RO	---	---	---
	0A	10th Input Object to be mapped	---	---	60FD 0020 hex	---	4 bytes (U32)	RO	---	---	---

- This is the mapping for an application that switches the mode of operation.
- The touch probe function is available.
- The following objects are mapped.

  Error code (603F hex), **Statusword** (6041 hex), **Position actual value** (6064 hex), **Torque actual value** (6077 hex), **Following error actual value** (60F4 hex), **Modes of operation display** (6061 hex), **Touch probe status** (60B9 hex), **Touch probe 1 positive edge** (60BA hex), **Touch probe 2 positive edge** (60BC hex), and **Digital inputs** (60FD hex)

Index (hex)	Sub-index (hex)	Object name	Setting range	Unit	Default setting	Data attri-bute	Size	Access	PDO map	Com-plete access	Modes of operation
1B04	---	261th transmit PDO Mapping	---	---	---	---	---	---	---	Possible	---
	00	Number of objects in this PDO	---	---	0A hex	---	1 byte (U8)	RO	---	---	---
	01	1st Output Object to be mapped	---	---	603F0010 hex	---	4 bytes (U32)	RO	---	---	---
	02	2nd Output Object to be mapped	---	---	60410010 hex	---	4 bytes (U32)	RO	---	---	---
	03	3rd Input Object to be mapped	---	---	60640020 hex	---	4 bytes (U32)	RO	---	---	---
	04	4th Input Object to be mapped	---	---	60770010 hex	---	4 bytes (U32)	RO	---	---	---
	05	5th Input Object to be mapped	---	---	60610008 hex	---	4 bytes (U32)	RO	---	---	---
	06	6th Input Object to be mapped	---	---	60B90010 hex	---	4 bytes (U32)	RO	---	---	---
	07	7th Input Object to be mapped	---	---	60BA0020 hex	---	4 bytes (U32)	RO	---	---	---
	08	8th Output Object to be mapped	---	---	60BC0020 hex	---	4 bytes (U32)	RO	---	---	---
	09	9th Input Object to be mapped	---	---	60FD0020 hex	---	4 bytes (U32)	RO	---	---	---
	0A	10th Input Object to be mapped	---	---	606C0020 hex	---	4 bytes (U32)	RO	---	---	---

- This is the mapping for an application that switches the mode of operation.
- The touch probe function is available. Only one latch position value is available.
- The following objects are mapped.

  Error code (603F hex), **Statusword** (6041 hex), **Position actual value** (6064 hex), **Torque actual value** (6077 hex), **Modes of operation display** (6061 hex), **Touch probe status** (60B9 hex), **Touch probe 1 positive edge** (60BA hex), **Touch probe 2 positive edge** (60BC hex), **Digital inputs** (60FD hex), and **Velocity actual value** (606C hex)

Index (hex)	Sub-index (hex)	Object name	Setting range	Unit	Default setting	Data attri-bute	Size	Access	PDO map	Com-plete access	Modes of operation
1B20	---	289th transmit PDO Mapping	---	---	---	---	---	---	---	Possible	---
	00	Number of objects in this PDO	---	---	02 hex	---	1 byte (U8)	RO	---	---	---
	01	1st Input Object to be mapped	---	---	413082108 hex	---	4 bytes (U32)	RO	---	---	---
	02	2nd Input Object to be mapped	---	---	41308310 hex	---	4 bytes (U32)	RO	---	---	---

- Transmission PDO mapping required for monitoring Safety Controlword and Statusword.
- The following objects are mapped.

  Mirror Safety controlword (4130-82 hex) and **Mirror Safety controlword** (4130-83 hex)

Index (hex)	Sub-index (hex)	Object name	Setting range	Unit	Default setting	Data attri-bute	Size	Access	PDO map	Com-plete access	Modes of operation
1BFF	---	512th transmit PDO Mapping	---	---	---	---	---	---	---	Possible	---
	00	Number of objects in this PDO	---	---	01 hex	---	1 byte (U8)	RO	---	---	---
	01	1st Output Object to be mapped	---	---	20020108 hex	---	4 bytes (U32)	RO	---	---	---

- This transmit mapping notifies the host controller that the Servo Drive detected an error.
- Sysmac Error Status (2002-01 hex) is mapped.
- If you connect the Servo Drive with a Machine Automation Controller NJ/NX-series CPU Unit, map this object to Sync Manager 3 PDO Assignment (1C13 hex). Sysmac Studio, by default, automatically maps this object.

A-2-6 Sync Manager Communication Objects

Objects 1C00 to 1C33 hex set how to use the EtherCAT communications memory.

Index (hex)	Sub-index (hex)	Object name	Setting range	Unit	Default setting	Data attri-bute	Size	Access	PDO map	Com-plete access	Modes of operation
1C00	---	Sync Manager Communication Type	---	---	---	---	---	---	---	Possible	---
	00	Number of used Sync Manager channels	---	---	04 hex	---	1 byte (U8)	RO	---	---	---
	01	Communication Type Sync Man-ager 0	---	---	01 hex	---	1 byte (U8)	RO	---	---	---
	02	Communication Type Sync Man-ager 1	---	---	02 hex	---	1 byte (U8)	RO	---	---	---
	03	Communication Type Sync Man-ager 2	---	---	03 hex	---	1 byte (U8)	RO	---	---	---
	04	Communication Type Sync Man-ager 3	---	---	04 hex	---	1 byte (U8)	RO	---	---	---

- The Sync Manager has the following settings.

SM0 : Mailbox receive (Master to Slave)
SM1 : Mailbox send (Slave to Master)
SM2 : Process data output (Master to Slave)
SM3 : Process data input (Slave to Master)

Index (hex)	Sub-index (hex)	Object name	Setting range	Unit	Default setting	Data attri-bute	Size	Access	PDO map	Com-plete access	Modes of operation
1C12	---	Sync Manager 2 PDO Assign-ment	---	---	---	---	---	---	---	Possible	---
	00	Number of assigned PDOs	00 to 03 hex	---	01 hex	D	1 byte (U8)	W	---	---	---
	01	1st PDO Map-ping Object Index of assigned PDO	0000 to 17FF hex	---	1701 hex	D	2 bytes (U16)	W	---	---	---
	02	2nd PDO Map-ping Object Index of assigned PDO	0000 to 17FF hex	---	0000 hex	D	2 bytes (U16)	W	---	---	---
	03	3rd PDO Map-ping Object Index of assigned PDO	0000 to 17FF hex	---	0000 hex	D	2 bytes (U16)	W	---	---	---

- This object gives the reception PDOs used by this Sync Manager.
- You can change these objects only when the EtherCAT communications state is Pre-Operational.
- The mapping you changed is not saved in the non-volatile memory. To use the mapping other than the default setting, specify objects each time you turn ON the power supply.
- If any of the following operation is attempted, an ABORT code for SDO communications will be returned.
  a) Writing when the communications state is other than Pre-Operational
  b) Writing a value other than 1600 hex, 1610 hex, and 1701 to 1705 hex

Index (hex)	Sub-index (hex)	Object name	Setting range	Unit	Default setting	Data attri-bute	Size	Access	PDO map	Com-plete access	Modes of operation
1C13	---	Sync Manager 3 PDO Assign-ment	---	---	---	---	---	---	---	Possible	---
	00	Number of assigned PDOs	00 to 04 hex	---	03 hex	D	1 byte (U8)	W	---	---	---
	01	1st PDO Map-ping Object Index of assigned PDO	0000 to 1BFF hex	---	1B01 hex	D	2 bytes (U16)	W	---	---	---
	02	2nd PDO Map-ping Object Index of assigned PDO	0000 to 1BFF hex	---	1B20 hex	D	2 bytes (U16)	W	---	---	---
	03	3rd PDO Map-ping Object Index of assigned PDO	0000 to 1BFF hex	---	1A10 hex	D	2 bytes (U16)	W	---	---	---
	04	4th PDO Map-ping Object Index of assigned PDO	0000 to 1BFF hex	---	0000 hex	D	2 bytes (U16)	W	---	---	---

- This object gives the transmission PDOs used by this Sync Manager.
- You can change these objects only when the EtherCAT communications state is Pre-Operational.
- The mapping you changed is not saved in the non-volatile memory. To use the mapping other than the default setting, specify objects each time you turn ON the power supply.
- If any of the following operation is attempted, an ABORT code for SDO communications will be returned.
  a) Writing when the communications state is other than Pre-Operational
  b) Writing a value other than 1A00 hex, 1A10 hex, 1B01 to 1B04 hex, 1B20 hex, and 1BFF hex

Index (hex)	Sub-index (hex)	Object name	Setting range	Unit	Default setting	Data attri-bute	Size	Access	PDO map	Com-plete access	Modes of operation
1C32	---	Sync Manager 2 Synchroniza-tion	---	---	---	---	---	---	---	Possible	---
	00	Number of Synchroniza-tion Parame-ters	---	---	0C hex	---	1 byte (U8)	RO	---	---	---
	01	Synchroniza-tion Type	0000 to 0003 hex	---	0000 hex	A	2 bytes (U16)	W	---	---	---
	02	Cycle Time	---	ns	00000000 hex	---	4 bytes (U32)	RO	---	---	---
	03	Shift Time	---	ns	0	A	4 bytes (U32)	W	---	---	---
	04	Synchroniza-tion Types sup-ported	---	---	0006 hex	---	2 bytes (U16)	RO	---	---	---
	05	Minimum Cycle Time	---	ns	125,000	---	4 bytes (U32)	RO	---	---	---
	06	Calc and Copy Time	---	ns	125,000	---	4 bytes (U32)	RO	---	---	---
	09	Delay Time	---	ns	31,250	---	4 bytes (U32)	RO	---	---	---
	0B	SM-Event Missed	---	---	0	---	2 bytes (U16)	RO	---	---	---
	0C	Cycle Time Too Small	---	---	---	---	2 bytes (U16)	RO	---	---	---

- This object gives the parameters for synchronization of Sync Manager 2.
- Subindex 01 hex **Synchronization Type** gives the synchronization mode of Sync Manager 2.

Value	Description
0000 hex	Free Run
0001 hex	Synchronous
0002 hex	DC Sync0
0003 hex	DC Sync1

- Subindex 02 hex **Cycle Time** gives the cycle in nanoseconds.
- Subindex 03 hex **Shift Time** sets the delay time from Sync0 to signal output. It is unsupported by this Servo Drive.
- Subindex 04 hex **Synchronization Types supported** gives the types of synchronization supported by this Servo Drive.

Bit	Description
1	Synchronous Supported
2 to 4	DC Type Supported DC (1: Sync0)

- Subindex 05 hex **Minimum Cycle Time** gives the time required for this Servo Drive to process the reception or transmission PDO.
- Subindex 06 hex **Calc and Copy Time** gives the internal processing time from data reception to signal output.
- Subindex 09 hex **Delay Time** gives the hardware-related delay time from signal output to actual output via the terminal.
- Subindex 0B hex **SM-Event Missed** gives the number of times which input data could not be updated because SM event has been missed.
- Subindex 0C hex **Cycle Time Too Small** gives the number of times which input data could not be updated because the internal processing was not completed before the next SM event.

Index (hex)	Sub-index (hex)	Object name	Setting range	Unit	Default setting	Data attri-bute	Size	Access	PDO map	Com-plete access	Modes of operation
1C33	---	Sync Manager 3 Synchroniza-tion	---	---	---	---	---	---	---	Possible	---
	00	Number of Synchroniza-tion Parame-ters	---	---	0C hex	---	1 byte (U8)	RO	---	---	---
	01	Synchroniza-tion Type	0000 to 0003 hex	---	0000 hex	A	2 bytes (U16)	W	---	---	---
	02	Cycle Time	---	ns	---	---	4 bytes (U32)	RO	---	---	---
	03	Shift Time	---	ns	0	A	4 bytes (U32)	W	---	---	---
	04	Synchroniza-tion Types sup-ported	---	---	0026 hex	---	2 bytes (U16)	RO	---	---	---
	05	Minimum Cycle Time	---	ns	125,000	---	4 bytes (U32)	RO	---	---	---
	06	Calc and Copy Time	---	ns	125,000	---	4 bytes (U32)	RO	---	---	---
	09	Delay Time	---	ns	31,250	---	4 bytes (U32)	RO	---	---	---
	0B	SM-Event Missed	---	---	0	---	2 bytes (U16)	RO	---	---	---
	0C	Cycle Time Too Small	---	---	---	---	2 bytes (U16)	RO	---	---	---

- This object gives the parameters for synchronization of Sync Manager 3.
- Subindex 01 hex **Synchronization Type** gives the synchronization mode of Sync Manager 3.

Value	Description
0000 hex	Free Run
0001 hex	Synchronous
0002 hex	DC Sync0
0003 hex	DC Sync1

- Subindex 02 hex **Cycle Time** gives the sync0 event cycle in nanoseconds.
- Subindex 03 hex **Shift Time** sets the timing of input signal recognition from Sync0.
- Subindex 04 hex **Synchronization Types supported** gives the types of synchronization supported by this Servo Drive.

Bit	Description
1	Synchronous Supported
2 to 4	DC Type Supported DC (1: Sync0)
5 to 6	Shift Settings (1: Input Shift with local timer)

- Subindex 05 hex **Minimum Cycle Time** gives the time required for this Servo Drive to process the reception or transmission PDO.
- Subindex 06 hex **Calc and Copy Time** gives the internal processing time from input signal recognition to transmission PDO setting.
- Subindex 0B hex **SM-Event Missed** gives the number of times which input data could not be updated because SM event has been missed.
- Subindex 0C hex **Cycle Time Too Small** gives the number of times which input data could not be updated because the internal processing was not completed before the next SM event.

A-2-7 Manufacturer Specific Objects

For details on servo parameters, refer to *Section 9 Details on Servo Parameters*.

Index (hex)	Sub-index (hex)	Object name	Setting range	Unit	Default setting	Data attri-bute	Size	Access	PDO map	Com-plete access	Modes of operation
2002	---	Sysmac Error	---	---	---	---	---	---	---	Possible	---
	00	Number of entries	---	---	02 hex	---	1 byte (U8)	RO	---	---	---
	01	Sysmac Error Status	---	---	---	---	1 byte (U8)	RO	TxPDO	---	---
	02	Sysmac Error Status Clear	00 to 01 hex	---	00 hex	A	1 byte (U8)	W	---	---	---

- This object is used to notify and clear the data of the Sysmac Error Status.
- Subindex 01 hex **Sysmac Error Status** notifies that the Servo Drive detected an error.

  If you connect the Servo Drive with a Machine Automation Controller NJ/NX-series CPU Unit, map this object to the PDO.
- Subindex 02 hex **Sysmac Error Status Clear** enables a Machine Automation Controller NJ/NX-series CPU Unit to reset the error that occurred in the Servo Drive.

Additional Information

Sysmac Studio, by default, uses the **512th transmit PDO Mapping** (1BFF hex) assignment to map the **Sysmac Error Status** (subindex 01 hex) automatically to the PDO.

Index (hex)	Sub-index (hex)	Object name	Setting range	Unit	Default setting	Data attri-bute	Size	Access	PDO map	Com-plete access	Modes of operation
2003	---	Sysmac Observation	---	---	---	---	---	---	---	Possible	---
	00	Number of entries	---	---	05 hex	---	1 byte (U8)	RO	---	---	---
	01	Observation 1	---	---	---	---	12 bytes (OS)	RO	---	---	---
	02	Observation 2	---	---	---	---	12 bytes (OS)	RO	---	---	---
	03	Observation 3	---	---	---	---	12 bytes (OS)	RO	---	---	---
	04	Observation 4	---	---	---	---	12 bytes (OS)	RO	---	---	---
	05	Observation 5	---	---	---	---	12 bytes (OS)	RO	---	---	---

- This object gives data of the existing observation.
- Subindexes 01 to 05 hex **Observation 1** to **5** give the code of the existing observation-level event.
- The format of the observation is shown below.

Item	Data type	Details
Error code	UINT32	The event code is stored in little-endian format.
Error detail type	UINT32	Byte 2 to 3: Type of the detailed data Byte 1: Size of the detailed data Byte 0: 00 hex (no detailed data), 01 hex (detailed data)
Error detail	UINT32	Detailed data

Index (hex)	Sub-index (hex)	Object name	Setting range	Unit	Default setting	Data attri-bute	Size	Access	PDO map	Com-plete access	Modes of operation
2004	---	Sysmac Minor Fault	---	---	---	---	---	---	---	Possible	---
	00	Number of entries	---	---	05 hex	---	1 byte (U8)	RO	---	---	---
	01	Minor Fault 1	---	---	---	---	12 bytes (OS)	RO	---	---	---
	02	Minor Fault 2	---	---	---	---	12 bytes (OS)	RO	---	---	---
	03	Minor Fault 3	---	---	---	---	12 bytes (OS)	RO	---	---	---
	04	Minor Fault 4	---	---	---	---	12 bytes (OS)	RO	---	---	---
	05	Minor Fault 5	---	---	---	---	12 bytes (OS)	RO	---	---	---

- This object gives data of the existing minor fault.
- Subindexes 01 to 05 hex **Minor Fault 1** to **5** give the code of the existing minor-fault-level event.
- The format of the minor fault is shown below.

Item	Data type	Details
Error code	UINT32	The event code is stored in little-endian format.
Error detail type	UINT32	Byte 2 to 3: Type of the detailed data Byte 1: Size of the detailed data Byte 0: 00 hex (no detailed data), 01 hex (detailed data)
Error detail	UINT32	Detailed data

Index (hex)	Sub-index (hex)	Object name	Setting range	Unit	Default setting	Data attri-bute	Size	Access	PDO map	Com-plete access	Modes of operation
2100	---	Error History Clear	00000000 to FFFFFFFF hex	---	00000000 hex	A	4 bytes (U32)	W	---	Not pos-sible	---

- This object clears the data of **Diagnosis History** (10F3 hex).
- The data is cleared by the writing of 6c636c65 hex.
- If a value other than 6c636c65 hex is written, an ABORT code is returned.

Index (hex)	Sub-index (hex)	Object name	Setting range	Unit	Default setting	Data attri-bute	Size	Access	PDO map	Com-plete access	Modes of operation
2200	---	Communica-tions Error Set-ting	0 to 15	Times	1	R	1 byte (U8)	RW	---	Not possi-ble	---

- This object sets the number of consecutive times to detect a Communications Synchronization Error (Error. No. 83.03).
- The range of the set value is from 0 to 15. The error is detected when the number of detection times reaches “the set value +1”.
- If the set value is *0*, a Communications Synchronization Error (Error No. 83.03) is detected when one communications error occurs.
- If you configure a ring topology with a Machine Automation Controller NJ/NX-series CPU Unit, set this object to 2 or more. If the set value is less than 2, a Communications Synchronization Error (Error No. 83.03) may be detected when the ring disconnection status occurs.

Additional Information

When the set value is *1* (default setting), a Communications Synchronization Error (Error No. 83.03) is detected if a communications error occurs twice in a row.

Index (hex)	Sub-index (hex)	Object name	Setting range	Unit	Default setting	Data attri-bute	Size	Access	PDO map	Com-plete access	Modes of operation
2201	---	Sync Not Received Tim-eout Setting	0 to 600	s	0	R	2 bytes (U16)	RO	---	Not possi-ble	---

- This object sets a value to detect a Synchronization Interruption Error (Error No. 88.02).
- If the set value is *0*, the detection time will be 120 seconds.

Index (hex)	Sub-index (hex)	Object name	Setting range	Unit	Default setting	Data attri-bute	Size	Access	PDO map	Com-plete access	Modes of operation
2400	---	Unit Restart	---	---	---	---	---	---	---	Not pos-sible	---
	00	Number of entries	---	---	01 hex	---	1 byte (U8)	RO	---	---	---
	01	Unit Restart	0000 0000 0000 to FFFF FFFF FFFF hex	---	0	A	6 bytes (VS)	W	---	---	---

- This object is used to execute the Unit Restart function.
- This function is executed by the writing of 746573657261 hex.
  If a value other than 746573657261 hex is written, an ABORT code is returned.

A-2-8 Servo Drive Profile Object

This section explains the CiA402 drive profile supported by 1S-series Servo Drives Advance Type.

Index (hex)	Sub-index (hex)	Object name	Setting range	Unit	Default setting	Data attri-bute	Size	Access	PDO map	Com-plete access	Modes of operation
603F	---	Error code	---	---	---	---	2 bytes (U16)	RO	TxPDO	Not possi-ble	---

- This object gives the code of the latest existing event or warning which exists in the Servo Drive.
- When more than one error or warning occurs at the same time, the highest-priority one is given.
- The given error is from the manufacturer specific area FF00 to FFFF hex.
- The lower word of FF00 to FFFF hex gives the main error number.

Index (hex)	Name	Data type	Specifications
603F	Error code	U16	0000 hex : No error FF01 hex : Main error number 1 FF02 hex : Main error number 2 : : FF99 hex : Main error number 99 FFA0 hex : Warning A0 hex : : FFC0 hex : Information C0 hex Others : Reserved

Index (hex)	Sub-index (hex)	Object name	Setting range	Unit	Default setting	Data attri-bute	Size	Access	PDO map	Com-plete access	Modes of operation
6040	---	Controlword	0000 to FFFF hex	---	0000 hex	A	2 bytes (U16)	W	RxPDO	Not pos-sible	csp, csv, cst, pp, pv, hm

- This object is used to control the state machine of the Servo Drive (PDS).

● Description of Set Values

Bit	Name	Description
0	Switch on	The state is controlled by these bits. Quick stop is not supported. The Quick stop bit is ignored even if it is set to *0*. For details, refer to *State Control Commands* on page A-3.
1	Enable voltage	
2	Quick stop	
3	Enable operation	
4 to 6	Operation mode specific	These bits are specific to the operation mode.
7	Fault reset	Errors and warnings are reset when this bit turns ON.
8	Operation mode specific	This bit is specific to the operation mode.
9	Operation mode specific	This bit is specific to the operation mode.
10	Reserved	
11	P_CL	These bits switch the torque limit function. They are normally set to *0*. Refer to*Torque Limit Switching* on page 7-30 for details.
12	N_CL	
13 to 15	Manufacturer specific	These are manufacturer specific bits. Always keep them at *0*.

● Description of bits specific to operation mode

Modes of operation	Controlword				
	Bit 9	Bit 8	Bit 6	Bit 5	Bit 4
Profile position mode (pp)	Change on Set-point	Halt	Abs/rel	Change set immediately	New set-point
Profile velocity mode (pv)	---	Halt	---	---	---
Homing mode (hm)	---	Halt	---	---	Homing operation start
Cyclic synchronous position mode (csp)	---	---	---	---	---
Cyclic synchronous velocity mode (csv)	---	---	---	---	---
Cyclic synchronous torque mode (cst)	---	---	---	---	---

- For details on how to use, refer to *6-6 Profile Position Mode* on page 6-16 for the Profile position mode, *6-7 Profile Velocity Mode* on page 6-21 for the Profile velocity mode, and *Homing Mode Specifications* on page A-7 for the Homing mode.

Index (hex)	Sub-index (hex)	Object name	Setting range	Unit	Default setting	Data attribute	Size	Access	PDO map	Complete access	Modes of operation
6041	---	Statusword	0000 to FFFF hex	---	0000 hex	---	2 bytes (U16)	RO	TxPDO	Not possible	csp, csv, cst, pp, pv, hm

- This object gives the present status of the Servo Drive (PDS).

● Bit Descriptions

Bit	Name	Description
0	Ready to switch on	These bits give the status. For details, refer to *State Coding* on page A-4.
1	Switched on	
2	Operation enabled	
3	Fault	
4	Voltage enabled*1	
5	Quick stop	
6	Switch on disabled	
7	Warning	This bit indicates that warning status exists. Operation continues without changing the status.
8	Manufacturer specific	This is a manufacturer specific bit. This bit is not used by 1S-series Servo Drives.
9	Remote	This bit indicates that the Servo Drive is currently controlled with Controlword. After initialization is completed, this bit changes to *1* (remote). When *0* (local) is given, it indicates that the support software has the control right to the Servo Drive.
10	Operation mode specific	This bit is specific to the operation mode.
11	Internal limit active	This bit indicates that the limit function is in effect. This bit changes to *1* when the limit function in the Servo Drive is activated. The limit function has four types of limits: the torque limit, velocity limit, drive prohibition input, and software position limit.
12 to 13	Operation mode specific	These bits are specific to the operation mode.

Bit	Name	Description
14 to 15	Manufacturer specific	These are manufacturer specific bits. These bits are not used by 1S-series Servo Drives.

*1. The Voltage enabled bit indicates that the main circuit power supply voltage is applied when it is *1*.

● Description of bits specific to operation mode

Modes of operation	Controlword		
	Bit 13	Bit 12	Bit 10
Profile position mode (pp)	Following error	Set-point acknowledge	Target reached
Profile velocity mode (pv)	---	Speed	Target reached
Homing mode (hm)	Homing error	Homing attained	Target reached
Cyclic synchronous position mode (csp)	Following error	Target position ignored	Status Toggle
Cyclic synchronous velocity mode (csv)	---	Target velocity ignored	Status Toggle
Cyclic synchronous torque mode (cst)	---	Target torque ignored	Status Toggle

- **Target position ignored**, **Target velocity ignored**, and **Target torque ignored** show whether the operation can follow the command. These bits change to *0* when operation cannot follow the command due to Drive Prohibition, Software Position Limit, etc.

Set value	Description
0	Ignore command
1	Follow command

- Status Toggle switches between 0 and 1 each time an RxPDO is received. The function of this bit is enabled or disabled with **Function Settings** (60DA hex).
- For how to use other bits, refer to *Profile Position Mode* on page 6-16 for the Profile position mode, *Profile Velocity Mode* on page 6-21 for the Profile velocity mode, and *Homing Mode Specifications* on page A-7 for the Homing mode.

Index (hex)	Sub-index (hex)	Object name	Setting range	Unit	Default setting	Data attribute	Size	Access	PDO map	Complete access	Modes of operation
605B	---	Shutdown option code	-7 to 0	---	-5	E	2 bytes (INT16)	RW	---	Not possible	---

- This object sets the operation of the Servo Drive during Shutdown (transition from the Operation enabled state to the Ready to switch on state). “During Shutdown” refers to the duration in which the Servo Drive decelerates and then stops after main circuit power OFF (Shutdown).
- When the running motor decelerates and the speed reaches 30 r/min or lower, the operation changes from the Deceleration Operation to the Operation after Stopping.

Description of Set Values

Set value	Deceleration method		Operation after stopping
-7	Operation A*1	Deceleration stop (The deceleration stop torque is used.)	Free
	Operation B*1	Free-run	
-6	Operation A*1	Deceleration stop (The deceleration stop torque is used.)	Free
	Operation B*1	Dynamic brake operation	
-5	Operation A*1	Deceleration stop (The deceleration stop torque is used.)	Dynamic brake operation
	Operation B*1	Free-run	
-4	Operation A*1	Deceleration stop (The deceleration stop torque is used.)	Dynamic brake operation
	Operation B*1	Dynamic brake operation	
-3	Dynamic brake operation		Free
-2	Free-run		Dynamic brake operation
-1	Dynamic brake operation		Dynamic brake operation
0	Free-run		Free

*1. The Servomotor stops according to the setting of Operation B when in an STO status that is not compatible with deceleration stop or when the P-N Voltage drops to the specified value or lower. In other cases, the Servomotor decelerates to stop according to the setting of Operation A.

Precautions for Correct Use

- If an error occurs while the main power supply is OFF, operation will follow **Fault reaction option code** (605E hex).

Index (hex)	Sub-index (hex)	Object name	Setting range	Unit	Default setting	Data attribute	Size	Access	PDO map	Complete access	Modes of operation
605C	---	Disable operation option code	-6 to 0	---	-4	E	2 bytes (INT16)	RW	---	Not possible	---

- This object sets the operation of the Servo Drive during Disable operation (transition from the Operation enabled state to the Switched on state). “During Disable operation” refers to the duration in which the Servo Drive decelerates and then stops after Servo OFF (Disable operation).
- When the running motor decelerates and the speed reaches 30 r/min or lower, the operation changes from the Deceleration Operation to the Operation after Stopping.

Description of Set Values

Set value	Deceleration operation	Operation after stopping
-6	Deceleration stop (The deceleration stop torque is used.)	Free
-4		Dynamic brake operation
-3	Dynamic brake operation	Free
-2	Free-run	Dynamic brake operation
-1	Dynamic brake operation	Dynamic brake operation
0	Free-run	Free

Precautions for Correct Use

- If an error occurs while the Servo is OFF, operation will follow **Fault reaction option code** (605E hex).
- If the main power supply turns OFF while the Servo is OFF, operation will follow **Shutdown option code** (605B hex).

Index (hex)	Sub-index (hex)	Object name	Setting range	Unit	Default setting	Data attri-bute	Size	Access	PDO map	Com-plete access	Modes of operation
605D	---	Halt option code	1 to 3	---	1	E	2 bytes (INT16)	RW	---	Not possi-ble	pp, pv, hm

- This object sets the stop method when bit 8 (Halt) of **Controlword** (6040 hex) is set to *1* during Homing mode (hm), pp mode, or pv mode.
- When the running motor decelerates and its speed reaches 30 r/min or lower, the operation changes from the deceleration operation to the operation after stopping.
- The following error is cleared regardless of the set value after the Servomotor stops.

● Description of Set Values

Set value	Deceleration method	Operation after stopping
1	Stopping with the following deceleration. pp, pv: Profile deceleration hm: Homing acceleration	pp, hm: Internal position command is zero pv: Internal velocity command is zero
2	Not supported	---
3	Deceleration stop (The deceleration stop torque is used.)	pp, hm: Internal position command is zero pv: Internal velocity command is zero

Index (hex)	Sub-index (hex)	Object name	Setting range	Unit	Default setting	Data attri-bute	Size	Access	PDO map	Com-plete access	Modes of operation
605E	---	Fault reaction option code	-7 to 0	---	-4	E	2 bytes (INT16)	RW	---	Not possi-ble	---

- This object sets the operation for the time when an error occurs.
- When the running motor decelerates and its speed reaches 30 r/min or lower, the operation changes from the Deceleration Operation to the Operation after Stopping.

● Description of Set Values

Set value	Deceleration operation		Operation after stopping
-7	Operation A*1	Deceleration stop (The deceleration stop torque is used.)	Free
	Operation B*1	Free-run	
-6	Operation A*1	Deceleration stop (The deceleration stop torque is used.)	Free
	Operation B*1	Dynamic brake operation	
-5	Operation A*1	Deceleration stop (The deceleration stop torque is used.)	Dynamic brake operation
	Operation B*1	Free-run	

Set value	Deceleration operation		Operation after stopping
-4	Operation A*1	Deceleration stop (The deceleration stop torque is used.)	Dynamic brake operation
	Operation B*1	Dynamic brake operation	
-3	Dynamic brake operation		Free
-2	Free-run		Dynamic brake operation
-1	Dynamic brake operation		Dynamic brake operation
0	Free-run		Free

*1. Operation A and B indicate whether or not to perform the deceleration stop when an error occurs. If an error that is compatible with deceleration stop occurs, the deceleration stop is performed according to the setting of Operation A. If an error that is not compatible with deceleration stop occurs, the dynamic brake operation or free-run is performed according to the setting of Operation B. For details on errors, refer to *12-3 Errors* on page 12-10.

Index (hex)	Sub-index (hex)	Object name	Setting range	Unit	Default setting	Data attri-bute	Size	Access	PDO map	Com-plete access	Modes of operation
6060	---	Modes of oper-ation	0 to 10	---	0	A	1 byte (INT8)	W	RxPDO	Not possi-ble	csp, csv, cst, pp, pv, hm

- This object sets the mode of operation.
- The default value is *0* (not specified). Set the mode of operation from the master after the power sup-ply is turned ON.
- A Command Warning (Error No. B1.00) occurs if the Servo is turned ON (Operation enabled = 1) with the default setting of *0* (not specified).
- Even when the default value *0* (not specified) is set again after changing the mode of operation, the mode of operation does not return to a **not specified**. The last mode of operation is retained.
- Similarly, when an unsupported mode of operation is set, the last mode is retained.
- When an unsupported mode of operation is set via SDO communications, an ABORT code is returned.

● Description of Set Values

Set value	Description
0	Not specified
1	Profile position mode (pp)
3	Profile velocity mode (pv)
6	Homing mode (hm)
8	Cyclic synchronous position mode (csp)
9	Cyclic synchronous velocity mode (csv)
10	Cyclic synchronous torque mode (cst)

- For details about changing the modes of operation, refer to *A-1-4 Changing the Mode of Operation* on page A-5.

Index (hex)	Sub-index (hex)	Object name	Setting range	Unit	Default setting	Data attri-bute	Size	Access	PDO map	Com-plete access	Modes of operation
6061	---	Modes of oper-ation display	---	---	---	---	1 byte (INT8)	RO	TxPDO	Not possi-ble	csp, csv, cst, pp, pv, hm

- This object gives the present mode of operation.
- The value definitions are the same as those for **Modes of operation** (6060 hex).

Index (hex)	Sub-index (hex)	Object name	Setting range	Unit	Default setting	Data attri-bute	Size	Access	PDO map	Com-plete access	Modes of operation
6062	---	Position demand value	---	Com-mand unit	---	---	4 bytes (INT32)	RO	TxPDO	Not possi-ble	csp, pp, hm

- This object gives the command position which is generated in the Servo Drive.

Index (hex)	Sub-index (hex)	Object name	Setting range	Unit	Default setting	Data attri-bute	Size	Access	PDO map	Com-plete access	Modes of operation
6063	---	Position actual internal value	---	Encod er unit	---	---	4 bytes (INT32)	RO	TxPDO	Not pos-sible	csp, csv, cst, pp, pv, hm

- This object gives the present position in units of encoder.

Index (hex)	Sub-index (hex)	Object name	Setting range	Unit	Default setting	Data attri-bute	Size	Access	PDO map	Com-plete access	Modes of operation
6064	---	Position actual value	---	Com-mand unit	---	---	4 bytes (INT32)	RO	TxPDO	Not pos-sible	csp, csv, cst, pp, pv, hm

- This object gives the present position in units of command.

Index (hex)	Sub-index (hex)	Object name	Setting range	Unit	Default setting	Data attri-bute	Size	Access	PDO map	Com-plete access	Modes of operation
6065	---	Following error window	0 to 4,294,967,295	Com-mand unit	10,500,000	A	4 bytes (U32)	RW	---	Not pos-sible	csp, pp, hm

- This object sets the threshold for a following error.
- When the following error is more than or equal to this set value, an Excessive Position Deviation Error (Error No. 24.00) is detected.

● Description of Set Values

Set value	Description
0 to 2,147,483,647	Enabled at the value set in the Following error window
2,147,483,648 to 4,294,967,294	Enabled at 2,147,483,647 hex as the value set in the Following error window
4,294,967,295	Excessive position deviation detection disabled

- If it is set to *4,294,967,295 (FFFF FFFF hex)*, detection of following errors is disabled.
- If it is set to *0*, there will always be a following error.
- When it is set to between *2,147,483,648* and *4,294,967,294*, the set value becomes *2,147,483,648*.

Index (hex)	Sub-index (hex)	Object name	Setting range	Unit	Default setting	Data attri-bute	Size	Access	PDO map	Com-plete access	Modes of operation
6067	---	Position win-dow	1 to 2,147,483,647	Com-mand unit	1,000	A	4 bytes (U32)	RW	---	Not pos-sible	csp, pp, hm

- When the following error is less than or equal to the set value of this object, the Positioning Completion Output 1 (INP1) turns ON.
- This setting is also used as the threshold for detecting Target reached flag in the EtherCAT communications status.

Index (hex)	Sub-index (hex)	Object name	Setting range	Unit	Default setting	Data attri-bute	Size	Access	PDO map	Com-plete access	Modes of operation
606B	---	Velocity demand value	---	Command unit/s	---	---	4 bytes (INT32)	RO	TxPDO	Not pos-sible	csp, pp, hm

- This object gives the command velocity which is generated in the Servo Drive.
- The displayed value may have an error due to the unit conversion from [r/min] to [command unit/s].

Index (hex)	Sub-index (hex)	Object name	Setting range	Unit	Default setting	Data attri-bute	Size	Access	PDO map	Com-plete access	Modes of operation
606C	---	Velocity actual value	---	Command unit/s	---	---	4 bytes (INT32)	RO	TxPDO	Not pos-sible	csp, csv, cst, pp, pv, hm

- This object gives the present velocity.
- The displayed value may have an error due to the unit conversion from [r/min] to [command unit/s].

Index (hex)	Sub-index (hex)	Object name	Setting range	Unit	Default setting	Data attri-bute	Size	Access	PDO map	Com-plete access	Modes of operation
6071	---	Target torque	-5,000 to 5,000	0.1%	0	A	2 bytes (INT16)	W	RxPDO	Not pos-sible	cst

- This object sets the torque command in Cyclic synchronous torque mode (cst).
- Set the value in units of 0.1% of the rated torque (100%).

Index (hex)	Sub-index (hex)	Object name	Setting range	Unit	Default setting	Data attri-bute	Size	Access	PDO map	Com-plete access	Modes of operation
6072	---	Max torque	0 to 5,000	0.1%	5,000	A	2 bytes (U16)	RW	RxPDO	Not pos-sible	csp, csv, cst, pp, pv, hm

- This object sets the maximum torque limit value.
- Set the value in units of 0.1% of the rated torque (100%).
- This object is intended for PDO assignment. Use this object to set the maximum torque from a PDO.
- To use the limit value without mapping it to a PDO, set the value in **Torque Limit** – **Max Torque** (3330-02 hex).

Index (hex)	Sub-index (hex)	Object name	Setting range	Unit	Default setting	Data attri-bute	Size	Access	PDO map	Com-plete access	Modes of operation
6074	---	Torque demand	---	0.1%	---	---	2 bytes (INT16)	RO	TxPDO	Not pos-sible	csp, csv, cst, pp, pv, hm

- This object gives the torque command value which is generated in the Servo Drive.
- The value is given in units of 0.1% of the rated torque (100%).

Index (hex)	Sub-index (hex)	Object name	Setting range	Unit	Default setting	Data attri-bute	Size	Access	PDO map	Com-plete access	Modes of operation
6077	---	Torque actual value	---	0.1%	---	---	2 bytes (INT16)	RO	TxPDO	Not pos-sible	csp, csv, cst, pp, pv, hm

- This object gives the present torque value.
- The value is given in units of 0.1% of the rated torque (100%).

Index (hex)	Sub-index (hex)	Object name	Setting range	Unit	Default setting	Data attri-bute	Size	Access	PDO map	Com-plete access	Modes of operation
607 A	---	Target position	-2,147,483,648 to 2,147,483,647	Com-mand unit	0	A	4 bytes (INT32)	W	RxPDO	Not pos-sible	csp, pp

- This object sets the command position in Cyclic synchronous position mode (csp) and Profile position mode (pp).

Index (hex)	Sub-index (hex)	Object name	Setting range	Unit	Default setting	Data attri-bute	Size	Access	PDO map	Com-plete access	Modes of operation
607C	---	Home offset	-2,147,483,648 to 2,147,483,647	Com-mand unit	0	R	4 bytes (INT32)	RW	---	Not pos-sible	csp, csv, cst, pp, pv, hm

- This object sets the offset value from the home of the absolute encoder to the zero position of **Position actual value** (6064 hex).

Index (hex)	Sub-index (hex)	Object name	Setting range	Unit	Default setting	Data attri-bute	Size	Access	PDO map	Com-plete access	Modes of operation
607D	---	Software posi-tion limit	---	---	---	---	---	---	---	Possible	---
	00	Number of entries	---	---	02 hex	---	1 byte (U8)	RO	---	---	---
	01	Min position limit	-2,147,483,648 to 2,147,483,647	Com-mand unit	-62,500	E	4 bytes (INT32)	RW	---	---	csp, csv, cst, pp, pv, hm
	02	Max position limit	-2,147,483,648 to 2,147,483,647	Com-mand unit	62,500	E	4 bytes (INT32)	RW	---	---	csp, csv, cst, pp, pv, hm

- This object sets the software position limit function.
- Subindex 01 hex **Min position limit** sets the negative limit value for **Position actual value** (6064 hex).
- Subindex 02 hex **Max position limit** sets the positive limit value for **Position actual value** (6064 hex).
- The software position limit is always relative to the home.
- Setting **Software Position Limit** (3B11 hex) is necessary to use the software position limit function.
- Refer to *7-4 Software Position Limit Functions* on page 7-17 for details.

Precautions for Correct Use

- Make sure that the value of Max position limit is larger than the value of Min position limit. The software position limit function is disabled when this condition is not met.
- The software position limit function is disabled when home is not defined.

Index (hex)	Sub-index (hex)	Object name	Setting range	Unit	Default setting	Data attribute	Size	Access	PDO map	Complete access	Modes of operation
607F	---	Max profile velocity	0 to 2,147,483,647	Command unit/s	2,147,483,647	A	4 bytes (U32)	W	RxPDO	Not possible	cst, pp, pv

- This object sets the velocity limit value in Cyclic synchronous torque mode (cst), Profile position mode (pp), and Profile velocity mode (pv).

Index (hex)	Sub-index (hex)	Object name	Setting range	Unit	Default setting	Data attribute	Size	Access	PDO map	Complete access	Modes of operation
6081	---	Profile velocity	0 to 2,147,483,647	Command unit/s	0	A	4 bytes (U32)	W	RxPDO	Not possible	pp

- This object sets the velocity used in Profile position mode (pp).

Index (hex)	Sub-index (hex)	Object name	Setting range	Unit	Default setting	Data attribute	Size	Access	PDO map	Complete access	Modes of operation
6083	---	Profile acceleration	1 to 2,147,483,647	Command unit/s^2	125,000	A	4 bytes (U32)	W	RxPDO	Not possible	pp, pv

- This object sets the acceleration rate in the Profile position mode (pp) and Profile velocity mode (pv).

Index (hex)	Sub-index (hex)	Object name	Setting range	Unit	Default setting	Data attribute	Size	Access	PDO map	Complete access	Modes of operation
6084	---	Profile deceleration	1 to 2,147,483,647	Command unit/s^2	125,000	A	4 bytes (U32)	W	RxPDO	Not possible	pp, pv

- This object sets the deceleration rate in the Profile position mode (pp) and Profile velocity mode (pv).

Index (hex)	Sub-index (hex)	Object name	Setting range	Unit	Default setting	Data attribute	Size	Access	PDO map	Complete access	Modes of operation
6091	---	Gear ratio	---	---	---	---	---	---	---	Possible	---
	00	Number of entries	---	---	02 hex	---	1 byte (U8)	RO	---	---	---
	01	Motor revolutions	0 to 1,073,741,824	---	1	R	4 bytes (U32)	RW	---	---	csp, csv, cst, pp, pv, hm
	02	Shaft revolutions	1 to 1,073,741,824	---	1	R	4 bytes (U32)	RW	---	---	csp, csv, cst, pp, pv, hm

- This object sets the electronic gear ratio.
- Subindex 01 hex **Motor Revolutions** sets the numerator of the electronic gear. If the set value is *0*, the encoder resolution is set in the numerator.
- Subindex 02 hex **Shaft Revolutions** sets the denominator of the electronic gear.
- The electronic gear ratio must be between 1/2,000 to 2,000. If it is set outside the range, an Electronic Gear Setting Error (Error No. 93.00) will occur.
- For details on the electronic gear setting, refer to *7-7 Electronic Gear Function* on page 7-29.

Index (hex)	Sub-index (hex)	Object name	Setting range	Unit	Default setting	Data attribute	Size	Access	PDO map	Complete access	Modes of operation
6098	---	Homing method	0 to 37	---	0	E	1 byte (INT8)	RW	---	Not possible	hm

- This object selects the homing method in the Homing mode (hm).

● Description of Set Values

Set value	Description
0	Not specified
8	Homing by Home Proximity Input and home signal (positive operation start)
12	Homing by Home Proximity Input and home signal (negative operation start)
19	Homing without home signal (positive operation start)
20	Homing without home signal (negative operation start)
33	Homing with home signal (negative operation start)
34	Homing with home signal (positive operation start)
37	Present home preset

- If the homing operation is started by setting a value other than 8, 12, 19, 20, 33, 34, or 37, a Command Error (Error No. 91.01) will occur.
- For details on homing, refer to *A-1-5 Homing Mode Specifications* on page A-7.

Index (hex)	Sub-index (hex)	Object name	Setting range	Unit	Defaul t set-ting	Data attri-bute	Size	Access	PDO map	Com-plete access	Modes of operation
6099	---	Homing speeds	---	---	---	---	---	---	---	Possible	---
	00	Number of entries	---	---	02 hex	---	1 byte (U8)	RO	---	---	---
	01	Speed during search for switch	1 to 2,147,483,647	Command unit/s	625	A	4 bytes (U32)	RW	---	---	hm
	02	Speed during search for zero	1 to 2,147,483,647	Command unit/s	625	A	4 bytes (U32)	RW	---	---	hm

- This object sets the homing speed.
- Subindex 01 hex **Speed during search for switch** sets the operation speed to be used until the Home Proximity Input signal is detected.
- Subindex 02 hex **Speed during search for zero** sets the operation speed to be used until the home signal is detected.

Index (hex)	Sub-index (hex)	Object name	Setting range	Unit	Default setting	Data attri-bute	Size	Access	PDO map	Com-plete access	Modes of operation
609 A	---	Homing acceleration	1 to 2,147,483,647	Command unit/s^2	125,000	A	4 bytes (U32)	RW	---	Not pos-sible	hm

- This object sets the acceleration and deceleration rate to be used during homing.

Index (hex)	Sub-index (hex)	Object name	Setting range	Unit	Default setting	Data attri-bute	Size	Access	PDO map	Com-plete access	Modes of operation
60B0	---	Position off-set	-2,147,483,648 to 2,147,483,647	Com-mand unit	0	A	4 bytes (INT32)	W	RxPDO	Not pos-sible	csp

- This object sets the offset for **Target position** (607A hex).
- In Cyclic synchronous position mode (csp), the offset value is added to **Target position** (607A hex) for use as the target position for the control.

Index (hex)	Sub-index (hex)	Object name	Setting range	Unit	Defaul t set-ting	Data attri-bute	Size	Access	PDO map	Com-plete access	Modes of operation
60B1	---	Velocity off-set	-2,147,483,648 to 2,147,483,647	Command unit/s	0	A	4 bytes (INT32)	W	RxPDO	Not pos-sible	csp, csv

- This object sets the offset for **Target velocity** (60FF hex).

Index (hex)	Sub-index (hex)	Object name	Setting range	Unit	Default setting	Data attri-bute	Size	Access	PDO map	Com-plete access	Modes of operation
60B2	---	Torque off-set	-5,000 to 5,000	0.1%	0	A	2 bytes (INT16)	W	RxPDO	Not possi-ble	csp, csv, cst

- This object sets the offset for **Target torque** (6071 hex).

Index (hex)	Sub-index (hex)	Object name	Setting range	Unit	Default setting	Data attri-bute	Size	Access	PDO map	Com-plete access	Modes of operation
60B8	---	Touch probe function	0 to 65,535	---	0	A	2 bytes (U16)	W	RxPDO	Not possi-ble	---

- This object sets the latch (touch probe) function.
- There are two channels, Latch Function 1 (bits 0 to 7) and Latch Function 2 (bits 8 to 15).
- Bits 0 and 8 execute latching when changed from *0* to *1*.
- To change the settings, set bit 0 or 8 to *0* and then to *1* again.
- For details, refer to *7-11 Touch Probe Function (Latch Function)* on page 7-38.

● Bit Descriptions

Set value		Description
Bit 0		Enable or disable Latch Function 1
	0	Latch Function 1 is disabled
	1	Latch Function 1 is enabled
Bit 1		Latch 1 operation
	0	Latch on the first trigger only.
	1	Latch continuously on every trigger input
Bit 2 to 3		Latch 1 trigger input signal switch
	00	Latch on the EXT1 signal.
	01	Latch on the phase-Z signal.
	10	Follow the setting in the **Touch probe source**.
	11	Reserved
Bit 4		Latch 1 trigger operation on the positive edge
	0	Not obtain data
	1	Obtain data
Bit 8		Enable or disable Latch Function 2
	0	Latch Function 2 is disabled
	1	Latch Function 2 is enabled
Bit 9		Latch 2 operation
	0	Latch on the first trigger only.
	1	Latch continuously on every trigger input
Bit 10 to 11		Latch 2 trigger input signal switch
	00	EXT2
	01	Latch on the phase-Z signal.
	10	Follow the setting in the **Touch probe source**.
	11	Reserved
Bit 12		Latch 2 trigger operation on the positive edge
	0	Not obtain data
	1	Obtain data

Index (hex)	Sub-index (hex)	Object name	Setting range	Unit	Default setting	Data attri-bute	Size	Access	PDO map	Com-plete access	Modes of operation
60B9	---	Touch probe status	---	---	---	---	2 bytes (U16)	RO	TxPDO	Not possi-ble	---

- This object gives the status of the latch function.

● Bit Descriptions

Set value		Description
Bit 0		Enable or disable Latch Function 1
	0	Disabled
	1	Enabled
Bit 1		With or without Latch 1 positive data
	0	Without latch data
	1	With latch data
Bit 8		Enable or disable Latch Function 2
	0	Disabled
	1	Enabled
Bit 9		With or without Latch 2 positive data
	0	Without latch data
	1	With latch data

Index (hex)	Sub-index (hex)	Object name	Setting range	Unit	Default setting	Data attri-bute	Size	Access	PDO map	Com-plete access	Modes of operation
60BA	---	Touch probe 1 positive edge	---	Com-mand unit	---	---	4 bytes (INT32)	RO	TxPDO	Not possi-ble	---

- This object gives the position which is latched on the positive edge by the Latch Function 1 (Touch probe 1).

Index (hex)	Sub-index (hex)	Object name	Setting range	Unit	Default setting	Data attri-bute	Size	Access	PDO map	Com-plete access	Modes of operation
60BC	---	Touch probe 2 positive edge	---	Com-mand unit	---	---	4 bytes (INT32)	RO	TxPDO	Not possi-ble	---

- This object gives the position which is latched on the positive edge by the Latch Function 2 (Touch probe 2).

Index (hex)	Sub-index (hex)	Object name	Setting range	Unit	Default setting	Data attri-bute	Size	Access	PDO map	Com-plete access	Modes of operation
60C2	---	Interpolation time period	---	---	---	---	---	---	---	Possible	---
	00	Number of entries	---	---	02 hex	---	1 byte (U8)	RO	---	---	---
	01	Interpolation time period value	0 to 255	---	1	E	1 byte (U8)	RW	---	---	csp, csv
	02	Interpolation time index	-128 to 63	---	-3	E	1 byte (INT8)	RW	---	---	csp, csv

- Sets the Command Dividing Function which is enabled in the Cyclic synchronous position mode (csp) or Cyclic synchronous velocity mode (csv).
- In the free-run mode only, the setting is updated, and in the synchronous mode, the EtherCAT com-munications are automatically set as the interpolation time period.
- Interpolation time period = Interpolation time period value × $10^{\text{(Interpolation time index)}}$ seconds.

- The set interpolation time period is used to perform linear interpolation for the target position and calculate the command position.
- If the set value exceeds 100 ms, then 100 ms is used to calculate the command position.

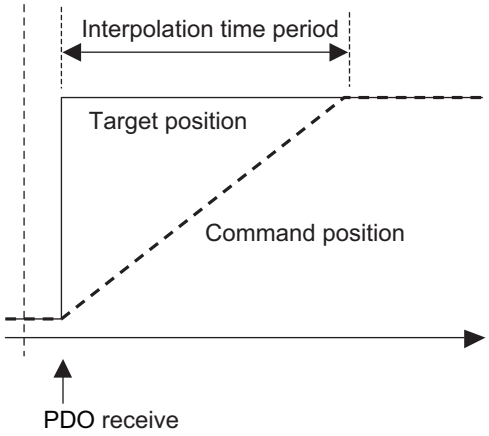

Index (hex)	Sub-index (hex)	Object name	Setting range	Unit	Default setting	Data attri-bute	Size	Access	PDO map	Com-plete access	Modes of operation
60D0	---	Touch probe source	---	---	---	---	---	---	---	Possible	---
	00	Number of entries	---	---	02 hex	---	1 byte (U8)	RO	---	---	---
	01	Touch probe 1 source	1 to 6	---	1	A	2 bytes (INT16)	RW	---	---	---
	02	Touch probe 2 source	1 to 6	---	2	A	2 bytes (INT16)	RW	---	---	---

- This object selects the trigger to be used for the latch function.

● Description of Set Values

Value	Description
1	External Latch Input 1 (EXT1)
2	External Latch Input 2 (EXT2)
6	Encoder Phase Z

Index (hex)	Sub-index (hex)	Object name	Setting range	Unit	Default setting	Data attri-bute	Size	Access	PDO map	Com-plete access	Modes of operation
60D9	---	Supported functions	---	---	00000001 hex	---	4 bytes (U32)	RO	---	Not pos-sible	---

- This object gives the extended functions which are supported by the Servo Drive.

Set value	Description
Bit 0	Status Toggle 0: Not supported 1: Supported
Bits 1 to 31	Reserved

Index (hex)	Sub-index (hex)	Object name	Setting range	Unit	Default setting	Data attri-bute	Size	Access	PDO map	Com-plete access	Modes of operation
60DA	---	Function Set-tings	00000000 to FFFFFFFF hex	---	00000001 hex	A	4 bytes (U32)	RW	---	Not pos-sible	---

- This object selects whether to enable or disable the extended functions which are supported by the Servo Drive.

Set value	Description
Bit 0	Status Toggle 0: Disabled 1: Enabled
Bits 1 to 31	Reserved Always set to 0.

Index (hex)	Sub-index (hex)	Object name	Setting range	Unit	Default setting	Data attri-bute	Size	Access	PDO map	Com-plete access	Modes of operation
60E0	---	Positive torque limit value	0 to 5,000	0.1%	5,000	A	2 bytes (U16)	W	RxPDO	Not possi-ble	csp, csv, cst, pp, pv, hm

- This object sets the positive torque limit value.
- The value is limited by the maximum torque of the connected motor.
- For details, refer to *7-8 Torque Limit Switching* on page 7-30.
- Set the value in units of 0.1% of the rated torque (100%).
- This object is intended for PDO assignment. Use this object to set the positive torque limit value from a PDO.
- To use the limit value without mapping it to a PDO, set the value in **Torque Limit** – **Positive Torque Limit Value** (3330-03 hex).

Index (hex)	Sub-index (hex)	Object name	Setting range	Unit	Default setting	Data attri-bute	Size	Access	PDO map	Com-plete access	Modes of operation
60E1	---	Negative torque limit value	0 to 5,000	0.1%	5,000	A	2 bytes (U16)	W	RxPDO	Not possi-ble	csp, csv, cst, pp, pv, hm

- This object sets the negative torque limit value.
- The value is limited by the maximum torque of the connected motor.
- For details, refer to *7-8 Torque Limit Switching* on page 7-30.
- Set the value in units of 0.1% of the rated torque (100%).
- This object is intended for PDO assignment. Use this object to set the negative torque limit value from a PDO.
- To use the limit value without mapping it to a PDO, set the value in **Torque Limit** – **Negative Torque Limit Value** (3330-04 hex).

Index (hex)	Sub-index (hex)	Object name	Setting range	Unit	Default setting	Data attri-bute	Size	Access	PDO map	Com-plete access	Modes of operation
60E3	---	Supported hom-ing methods	---	---	---	---	---	---	---	Possible	---
	00	Number of entries	---	---	07 hex	---	1 byte (U8)	RO	---	---	---
	01	1st supported homing method	---	---	8	---	2 bytes (INT16)	RO	---	---	hm
	02	2nd supported homing method	---	---	12	---	2 bytes (INT16)	RO	---	---	hm
	03	3rd supported homing method	---	---	19	---	2 bytes (INT16)	RO	---	---	hm
	04	4th supported homing method	---	---	20	---	2 bytes (INT16)	RO	---	---	hm
	05	5th supported homing method	---	---	33	---	2 bytes (INT16)	RO	---	---	hm
	06	6th supported homing method	---	---	34	---	2 bytes (INT16)	RO	---	---	hm
	07	7th supported homing method	---	---	37	---	2 bytes (INT16)	RO	---	---	hm

- This object gives the supported homing methods.

Index (hex)	Sub-index (hex)	Object name	Setting range	Unit	Default setting	Data attri-bute	Size	Access	PDO map	Com-plete access	Modes of operation
60F4	---	Following error actual value	---	Com-mand unit	---	---	4 bytes (INT16)	RO	TxPDO	Not possi-ble	csp, pp, hm

- This object gives the amount of following error.

Index (hex)	Sub-index (hex)	Object name	Setting range	Unit	Default setting	Data attri-bute	Size	Access	PDO map	Com-plete access	Modes of operation
60FA	---	Control effort	---	Com-mand unit/s	---	---	4 bytes (INT32)	RO	TxPDO	Not possi-ble	csp, pp, hm

- This object gives the velocity command value which is generated in the position control of the Servo Drive.
- The displayed value may have an error due to the unit conversion from [r/min] to [command unit/s].

Index (hex)	Sub-index (hex)	Object name	Setting range	Unit	Default setting	Data attri-bute	Size	Access	PDO map	Com-plete access	Modes of operation
60FC	---	Position demand internal value	---	Encoder unit	---	---	4 bytes (INT32)	RO	TxPDO	Not possi-ble	csp, pp, hm

- This object gives the command position which is generated in the Servo Drive.

Index (hex)	Sub-index (hex)	Object name	Setting range	Unit	Default setting	Data attri-bute	Size	Access	PDO map	Com-plete access	Modes of operation
60FD	---	Digital inputs	---	---	---	---	4 bytes (U32)	RO	TxPDO	Not possi-ble	---

- This object gives each function I/O status of the Servo Drive.

● Bit Descriptions

Bit	Signal name	Symbol	Value	Description
0	Negative Drive Prohibition Input	NOT	0	OFF
			1	ON
1	Positive Drive Prohibition Input	POT	0	OFF
			1	ON
2	Home Proximity Input	DEC	0	OFF
			1	ON
16	Encoder Phase Z Detection	PC	0	Phase-Z signal not detected during communication cycle
			1	Phase-Z signal detected during communication cycle
17	External Latch Input 1	EXT1	0	OFF
			1	ON
18	External Latch Input 2	EXT2	0	OFF
			1	ON
20	Monitor Input 1	MON1	0	OFF
			1	ON
21	Monitor Input 2	MON2	0	OFF
			1	ON
22	Monitor Input 3	MON3	0	OFF
			1	ON
23	Positive Torque Limit Input	PCL	0	OFF
			1	ON
24	Negative Torque Limit Input	NCL	0	OFF
			1	ON
25	Error Stop Input	ESTP	0	OFF
			1	ON
26	Brake Interlock	BKIR	0	Brake released
			1	Brake locked
27	Safety input 1	STO1	0	OFF
			1	ON
28	Safety input 2	STO2	0	OFF
			1	ON
29	EDM Output	EDM	0	OFF
			1	ON
30	Monitor Input 4	MON4	0	OFF
			1	ON
31	Monitor Input 5	MON5	0	OFF
			1	ON

Index (hex)	Sub-index (hex)	Object name	Setting range	Unit	Default setting	Data attri-bute	Size	Access	PDO map	Com-plete access	Modes of operation
60FE	---	Digital out-puts	---	---	---	---	---	---	---	Possible	---
	00	Number of entries	---	---	02 hex	---	1 byte (U8)	RO	---	---	---
	01	Physical out-puts	---	---	0000 0001 hex	A	4 bytes (U32)	W	RxPDO	---	---
	02	Bit mask	---	---	0000 0000 hex	A	4 bytes (U32)	RW	---	---	---

- This object sets and controls the function output.
- Subindex 01 hex **Physical outputs** changes the function output status by the writing of a value to the corresponding bit.
- Subindex 02 hex **Bit mask** selects whether to enable or disable the Physical outputs.

● Bit Description of Subindex 01 hex

Set *0* for the bits that are not listed in the table.

Bit	Signal	Symbol	Value	Description
0	NC contact Brake Interlock Output	BKIR_b	0	Brake released
			1	Brake held
16	Remote Output 1	R-OUT1	0	OFF
			1	ON
17	Remote Output 2	R-OUT2	0	OFF
			1	ON
18	Remote Output 3	R-OUT3	0	OFF
			1	ON
24	Gain Switching	G-SEL	0	Gain 1
			1	Gain 2
28	NO contact Brake Interlock Output	BKIR_a	0	Brake held
			1	Brake released

● Bit Description of Subindex 02 hex

Bit	Signal name	Symbol	Value	Description
0	NC contact Brake Interlock Output*1	BKIR_b	0	Output disabled
			1	Output enabled
16	Remote Output 1	R-OUT1	0	Output disabled
			1	Output enabled
17	Remote Output 2	R-OUT2	0	Output disabled
			1	Output enabled
18	Remote Output 3	R-OUT3	0	Output disabled
			1	Output enabled
24	Gain Switching	G-SEL	0	Setting disabled
			1	Setting enabled
28	NO contact Brake Interlock Output*1	BKIR_a	0	Output disabled
			1	Output enabled

*1. Even when Bit mask for Brake Interlock Output is *0* (output disabled), the Servo Drive can perform the brake control.

Index (hex)	Sub-index (hex)	Object name	Setting range	Unit	Default setting	Data attri-bute	Size	Access	PDO map	Com-plete access	Modes of operation
60FF	---	Target veloc-ity	-2,147,483,648 to 2,147,483,647	Com-mand unit/s	0	A	4 bytes (INT32)	W	RxPDO	Not pos-sible	csv, pv

- This object sets the command velocity in Cyclic synchronous velocity mode (csp) and Profile velocity mode (pp).

Index (hex)	Sub-index (hex)	Object name	Setting range	Unit	Default setting	Data attri-bute	Size	Access	PDO map	Com-plete access	Modes of operation
6402	---	Motor type	---	---	3	---	2 bytes (U16)	RO	---	Not possi-ble	---

- This object gives the type of connected motor.
- It is always 3 (PM synchronous motor) for this Servo Drive.

Index (hex)	Sub-index (hex)	Object name	Setting range	Unit	Default setting	Data attri-bute	Size	Access	PDO map	Com-plete access	Modes of operation
6404	---	Motor manu-facturer	---	---	OMRON	---	20 bytes (VS)	RO	---	Not possi-ble	---

- This object gives the motor manufacturer name.

Index (hex)	Sub-index (hex)	Object name	Setting range	Unit	Default setting	Data attri-bute	Size	Access	PDO map	Com-plete access	Modes of operation
6502	---	Supported drive modes	---	---	000003A5 hex	---	4 bytes (U32)	RO	---	Not pos-sible	---

- This object gives the supported modes of operation.

● Bit Descriptions

Bit	Supported mode	Value
0	pp (Profile position mode)	1: Supported
1	vl (Velocity mode)	0: Not supported
2	pv (Profile velocity mode)	1: Supported
3	tq (Profile torque mode)	0: Not supported
4	Reserved	0
5	hm (Homing mode)	1: Supported
6	ip (Interpolated position mode)	0: Not supported
7	csp (Cyclic synchronous position mode)	1: Supported
8	csv (Cyclic synchronous velocity mode)	1: Supported
9	cst (Cyclic synchronous torque mode)	1: Supported
10 to 31	Reserved	0

A-2-9 Safety Function Objects

This section explains objects defined in the FSoE CiA402 slave connection.

Index (hex)	Sub-index (hex)	Object name	Setting range	Unit	Default setting	Data attri-bute	Size	Access	PDO map	Com-plete access	Modes of operation
6620	---	safety controlword	---	---	---	---	---	---	---	Possible	---
	00	Number of entries	---	---	02 hex	---	1 byte (U8)	RO	---	---	---
	01	safety controlword 1st Byte	---	---	---	---	1 byte (U8)	RO	---	---	---
	02	safety controlword 2nd Byte	---	---	---	---	1 byte (U8)	RO	---	---	---

- This object gives the command status of the safety function.

● Bit Description of Subindex 01 hex

Bit	Description
0	Gives the status of STO command. 0: STO activate command issued 1: STO activate command not issued
1	Gives the status of SS1 1st instance command. 0: SS1 activate command issued 1: SS1 activate command not issued
2	Gives the status of SS2 1st instance command. 0: SS2 activate command issued 1: SS2 activate command not issued
3	Gives the status of SOS 1st instance command. 0: SOS activate command issued 1: SOS activate command not issued
5	Gives the status of SDI positive direction command. 0: Prohibit rotation in the positive direction. 1: Permit rotation in the positive direction.
6	Gives the status of SDI negative direction command. 0: Prohibit rotation in the negative direction. 1: Permit rotation in the negative direction.
7	Gives the status of error reset command. 0: Error reset command not issued 1: Error reset command issued

- Subindex 02 hex **safety controlword 2nd Byte** gives the command status of the safety function which are mapped to 2nd byte of 1610 hex PDO mapping object.

Index (hex)	Sub-index (hex)	Object name	Setting range	Unit	Default setting	Data attri-bute	Size	Access	PDO map	Com-plete access	Modes of operation
6621	---	safety statusword	---	---	---	---	---	---	---	Possible	---
	00	Number of entries	---	---	02 hex	---	1 byte (U8)	RO	---	---	---
	01	safety statusword 1st Byte	---	---	---	---	1 byte (U8)	RO	---	---	---
	02	safety statusword 2nd Byte	---	---	---	---	1 byte (U8)	RO	---	---	---

- This object gives the status of safety function.

● Bit Description of Subindex 01 hex

Bit	Description
0	Gives the STO status. 0: Normal status 1: STO status
3	Gives the SOS 1st instance status. 0: Normal status 1: SOS status
5	Gives positive direction rotation status. 0: No rotation or rotate to negative direction 1: Rotate to positive direction
6	Gives negative direction rotation status. 0: No rotation or rotate to positive direction 1: Rotate to negative direction
7	Gives the error status of the safety function. 0: No error 1: Error detected

● Bit Description of Subindex 02 hex

Bit	Description
0 to 6	Gives the status of the safety function which are mapped to 2nd byte of 1A10 hex PDO mapping object.
7	Gives the safety connection status. 0: Without safety connection 1: With safety connection

Index (hex)	Sub-index (hex)	Object name	Setting range	Unit	Default setting	Data attri-bute	Size	Access	PDO map	Com-plete access	Modes of operation
6632	---	error acknowl-edge	0 to 1	---	---	A	1 bit (BOOL)	W	RxPDO, TxPDO	Not possi-ble	---

- This object gives and resets an error of the safety function.
- You can use this function by mapping this object to the safety process data.
- If you map this object to the SDO communications or normal PDOs, the written value will be ignored.

● Description of Reading and Writing

Access	Description
Read	Gives an error of the safety function. 0: No error 1: Error detected
Write	Resets an error of the safety function. From 0 to 1: Error reset

Index (hex)	Sub-index (hex)	Object name	Setting range	Unit	Default setting	Data attri-bute	Size	Access	PDO map	Com-plete access	Modes of operation
6640	---	STO command	0 to 1	---	0	A	1 bit (BOOL)	W	RxPDO, TxPDO	Not possi-ble	---

- This object gives the STO status and issues the STO command.
- You can use this function by mapping this object to the safety process data.
- If you map this object to the SDO communications or normal PDOs, the written value will be ignored.

● Description of Reading and Writing

Access	Description
Read	Gives the STO status. 0: Normal status 1: STO status
Write	Issues the STO command. 0: Activate STO 1: Reset STO

Index (hex)	Sub-index (hex)	Object name	Setting range	Unit	Default setting	Data attri-bute	Size	Access	PDO map	Com-plete access	Modes of operation
6643	---	STO activate SBC	---	---	---	---	---	---	---	Possible	---
	00	Number of entries	---	---	01 hex	---	1 byte (U8)	RO	---	---	---
	01	STO activate SBC1	00000000 to 66600101 hex	---	00000000 hex	S	4 bytes (U32)	W	---	---	---

- It is a setting to activate SBC function while STO is activated.
- This object is for SRA parameters.

● Description of Subindex 01 hex

Hex	Description
0000 0000	Not activate SBC command.
6660 0101	Activate SBC command1.

Index (hex)	Sub-index (hex)	Object name	Setting range	Unit	Default setting	Data attri-bute	Size	Access	PDO map	Com-plete access	Modes of operation
6650	---	SS1 command	---	---	---	---	---	---	---	Possible	---
	00	Number of entries	---	---	08 hex	---	1 byte (U8)	RO	---	---	---
	01	SS1 command1	0 to 1	---	---	A	1 bit (BOOL)	W	RxPDO, TxPDO	---	---
	02	SS1 command2	0 to 1	---	---	A	1 bit (BOOL)	W	RxPDO, TxPDO	---	---
	03	SS1 command3	0 to 1	---	---	A	1 bit (BOOL)	W	RxPDO, TxPDO	---	---
	04	SS1 command4	0 to 1	---	---	A	1 bit (BOOL)	W	RxPDO, TxPDO	---	---
	05	SS1 command5	0 to 1	---	---	A	1 bit (BOOL)	W	RxPDO, TxPDO	---	---
	06	SS1 command6	0 to 1	---	---	A	1 bit (BOOL)	W	RxPDO, TxPDO	---	---
	07	SS1 command7	0 to 1	---	---	A	1 bit (BOOL)	W	RxPDO, TxPDO	---	---
	08	SS1 command8	0 to 1	---	---	A	1 bit (BOOL)	W	RxPDO, TxPDO	---	---

- It can monitor SS1 function status and give SS1 command.

● Description of Reading and Writing

Access	Description
Read	Gives the SS1 status. 0: Normal status 1: SS1 status
Write	Issues the SS1 command. 0: Activate SS1 1: Reset SS1

Index (hex)	Sub-index (hex)	Object name	Setting range	Unit	Default setting	Data attri-bute	Size	Access	PDO map	Com-plete access	Modes of operation
6651	---	SS1 time to STO	---	---	---	---	---	---	---	Possible	---
	00	Number of entries	---	---	08 hex	---	1 byte (U8)	RO	---	---	---
	01	SS1 time to STO1	---	ms	0	S	2 bytes (U16)	W	---	---	---
	02	SS1 time to STO2	---	ms	0	S	2 bytes (U16)	W	---	---	---
	03	SS1 time to STO3	---	ms	0	S	2 bytes (U16)	W	---	---	---
	04	SS1 time to STO4	---	ms	0	S	2 bytes (U16)	W	---	---	---
	05	SS1 time to STO5	---	ms	0	S	2 bytes (U16)	W	---	---	---
	06	SS1 time to STO6	---	ms	0	S	2 bytes (U16)	W	---	---	---
	07	SS1 time to STO7	---	ms	0	S	2 bytes (U16)	W	---	---	---
	08	SS1 time to STO8	---	ms	0	S	2 bytes (U16)	W	---	---	---

- It sets a time until STO function is activated after a Servo Drive receives SS1 command. Set a time every SS1 commands.
- This object is for SRA parameters.

Index (hex)	Sub-index (hex)	Object name	Setting range	Unit	Default setting	Data attri-bute	Size	Access	PDO map	Com-plete access	Modes of operation
6653	---	SS1 velocity zero window u32	---	---	---	---	---	---	---	Possible	---
	00	Number of entries	---	---	08 hex	---	1 byte (U8)	RO	---	---	---
	01	SS1 velocity zero window1	10 to 20,000	r/min	50	S	4 bytes (U32)	W	---	---	---
	02	SS1 velocity zero window2	10 to 20,000	r/min	50	S	4 bytes (U32)	W	---	---	---
	03	SS1 velocity zero window3	10 to 20,000	r/min	50	S	4 bytes (U32)	W	---	---	---
	04	SS1 velocity zero window4	10 to 20,000	r/min	50	S	4 bytes (U32)	W	---	---	---
	05	SS1 velocity zero window5	10 to 20,000	r/min	50	S	4 bytes (U32)	W	---	---	---
	06	SS1 velocity zero window6	10 to 20,000	r/min	50	S	4 bytes (U32)	W	---	---	---
	07	SS1 velocity zero window7	10 to 20,000	r/min	50	S	4 bytes (U32)	W	---	---	---
	08	SS1 velocity zero window8	10 to 20,000	r/min	50	S	4 bytes (U32)	W	---	---	---

- It is a setting to activate SS1 function with motor's velocity. Set a limit for velocity to detect that a motor stops every SS1 commands.

- This object is for SRA parameters.

Index (hex)	Sub-index (hex)	Object name	Setting range	Unit	Default setting	Data attri-bute	Size	Access	PDO map	Com-plete access	Modes of operation
6654	---	SS1 time for velocity zero	---	---	---	---	---	---	---	Possible	---
	00	Number of entries	---	---	08 hex	---	1 byte (U8)	RO	---	---	---
	01	SS1 time for velocity zero 1	---	ms	0	S	2 bytes (U16)	W	---	---	---
	02	SS1 time for velocity zero 2	---	ms	0	S	2 bytes (U16)	W	---	---	---
	03	SS1 time for velocity zero 3	---	ms	0	S	2 bytes (U16)	W	---	---	---
	04	SS1 time for velocity zero 4	---	ms	0	S	2 bytes (U16)	W	---	---	---
	05	SS1 time for velocity zero 5	---	ms	0	S	2 bytes (U16)	W	---	---	---
	06	SS1 time for velocity zero 6	---	ms	0	S	2 bytes (U16)	W	---	---	---
	07	SS1 time for velocity zero 7	---	ms	0	S	2 bytes (U16)	W	---	---	---
	08	SS1 time for velocity zero 8	---	ms	0	S	2 bytes (U16)	W	---	---	---

- It is a setting to activate SS1 function with motor's velocity. Set a time for monitoring to detect that a motor stops. STO function is activated after SS1 time for velocity zero passed when the motor’s velocity continuously fulfills one within SS1 velocity zero window. Set it every SS1 commands.
- This object is for SRA parameters.

Index (hex)	Sub-index (hex)	Object name	Setting range	Unit	Default setting	Data attri-bute	Size	Access	PDO map	Com-plete access	Modes of operation
6658	---	SS1 activate SBC	---	---	---	---	---	---	---	Possible	---
	00	Number of entries	---	---	08 hex	---	1 byte (U8)	RO	---	---	---
	01	SS1 activate SBC 1	00000000 to 66600101 hex	---	0	S	4 bytes (U32)	W	---	---	---
	02	SS1 activate SBC 2	00000000 to 66600101 hex	---	0	S	4 bytes (U32)	W	---	---	---
	03	SS1 activate SBC 3	00000000 to 66600101 hex	---	0	S	4 bytes (U32)	W	---	---	---
	04	SS1 activate SBC 4	00000000 to 66600101 hex	---	0	S	4 bytes (U32)	W	---	---	---
	05	SS1 activate SBC 5	00000000 to 66600101 hex	---	0	S	4 bytes (U32)	W	---	---	---
	06	SS1 activate SBC 6	00000000 to 66600101 hex	---	0	S	4 bytes (U32)	W	---	---	---
	07	SS1 activate SBC 7	00000000 to 66600101 hex	---	0	S	4 bytes (U32)	W	---	---	---
	08	SS1 activate SBC 8	00000000 to 66600101 hex	---	0	S	4 bytes (U32)	W	---	---	---

- It is a setting to activate SBC function while STO function is activated by SS1 function. Set it every SS1 commands.
- This object is for SRA parameters.

● Description of Subindex 01 to 08 hex

Hex	Description
0000 0000	Not activate SBC command.
6660 0101	Activate SBC command1.

Index (hex)	Sub-index (hex)	Object name	Setting range	Unit	Default setting	Data attri-bute	Size	Access	PDO map	Com-plete access	Modes of operation
6660	---	SBC command1	---	---	---	---	---	---	---	Not pos-sible	---
	00	Number of entries	---	---	01 hex	---	1 byte (U8)	RO	---	---	---
	01	SBC command1	0 to 1	---	---	A	1 bit (BOOL)	W	RxPDO, TxPDO	---	---

- It can confirm SBC function state and give SBC command.

● Description of Reading and Writing

Access	Description
Read	Gives the SBC status. 0: Normal status 1: SBC status
Write	Issues the SBC command. 0: Activate SBC 1: Reset SBC

Index (hex)	Sub-index (hex)	Object name	Setting range	Unit	Default setting	Data attri-bute	Size	Access	PDO map	Com-plete access	Modes of operation
6661	---	SBC brake time delay	---	---	---	---	---	---	---	Possible	---
	00	Number of entries	---	---	01 hex	---	1 byte (U8)	RO	---	---	---
	01	SBC brake time delay	0 to 1,000	ms	200	S	2 bytes (U16)	W	---	---	---

- Set SBC Brake Delay Time used in SBC function.

Index (hex)	Sub-index (hex)	Object name	Setting range	Unit	Default setting	Data attri-bute	Size	Access	PDO map	Com-plete access	Modes of operation
6668	---	SOS command	---	---	---	---	---	---	---	Not pos-sible	---
	00	Number of entries	---	---	08 hex	---	1 byte (U8)	RO	---	---	---
	01	SOS command1	0 to 1	---	---	A	1 bit (BOOL)	W	RxPDO, TxPDO	---	---
	02	SOS command2	0 to 1	---	---	A	1 bit (BOOL)	W	RxPDO, TxPDO	---	---
	03	SOS command3	0 to 1	---	---	A	1 bit (BOOL)	W	RxPDO, TxPDO	---	---
	04	SOS command4	0 to 1	---	---	A	1 bit (BOOL)	W	RxPDO, TxPDO	---	---
	05	SOS command5	0 to 1	---	---	A	1 bit (BOOL)	W	RxPDO, TxPDO	---	---
	06	SOS command6	0 to 1	---	---	A	1 bit (BOOL)	W	RxPDO, TxPDO	---	---
	07	SOS command7	0 to 1	---	---	A	1 bit (BOOL)	W	RxPDO, TxPDO	---	---
	08	SOS command8	0 to 1	---	---	A	1 bit (BOOL)	W	RxPDO, TxPDO	---	---

- It can confirm SOS function state and give SOS command.

● Description of Reading and Writing

Access	Description
Read	Gives the SOS status. 0: Normal status 1: SOS status
Write	Issues the SOS command. 0: Activate SOS 1: Reset SOS

Index (hex)	Sub-index (hex)	Object name	Setting range	Unit	Default setting	Data attri-bute	Size	Access	PDO map	Com-plete access	Modes of operation
666A	---	SOS position zero window	---	---	---	---	---	---	---	Possible	---
	00	Number of entries	---	---	08 hex	---	1 byte (U8)	RO	---	---	---
	01	SOS position zero window1	128 to 2,147,483,647	Encoder unit	131,072	S	4 bytes (U32)	W	---	---	---
	02	SOS position zero window2	128 to 2,147,483,647	Encoder unit	131,072	S	4 bytes (U32)	W	---	---	---
	03	SOS position zero window3	128 to 2,147,483,647	Encoder unit	131,072	S	4 bytes (U32)	W	---	---	---
	04	SOS position zero window4	128 to 2,147,483,647	Encoder unit	131,072	S	4 bytes (U32)	W	---	---	---
	05	SOS position zero window5	128 to 2,147,483,647	Encoder unit	131,072	S	4 bytes (U32)	W	---	---	---
	06	SOS position zero window6	128 to 2,147,483,647	Encoder unit	131,072	S	4 bytes (U32)	W	---	---	---
	07	SOS position zero window7	128 to 2,147,483,647	Encoder unit	131,072	S	4 bytes (U32)	W	---	---	---
	08	SOS position zero window8	128 to 2,147,483,647	Encoder unit	131,072	S	4 bytes (U32)	W	---	---	---

- Set a window for monitoring from travel distance when SOS function is activated. Set it every SOS commands.
- Position zero window is round processed to the multiple numbers of 128 below the setting value. For example, if a setting value is set from 256 to 383, the value is 256.
- This object is for SRA parameters.

Index (hex)	Sub-index (hex)	Object name	Setting range	Unit	Default setting	Data attri-bute	Size	Access	PDO map	Com-plete access	Modes of operation
666C	---	SOS velocity zero window	---	---	---	---	---	---	---	Possible	---
	00	Number of entries	---	---	08 hex	---	1 byte (U8)	RO	---	---	---
	01	SOS velocity zero window1	10 to 20,000	r/min	50	S	4 bytes (U32)	W	---	---	---
	02	SOS velocity zero window2	10 to 20,000	r/min	50	S	4 bytes (U32)	W	---	---	---
	03	SOS velocity zero window3	10 to 20,000	r/min	50	S	4 bytes (U32)	W	---	---	---
	04	SOS velocity zero window4	10 to 20,000	r/min	50	S	4 bytes (U32)	W	---	---	---
	05	SOS velocity zero window5	10 to 20,000	r/min	50	S	4 bytes (U32)	W	---	---	---
	06	SOS velocity zero window6	10 to 20,000	r/min	50	S	4 bytes (U32)	W	---	---	---
	07	SOS velocity zero window7	10 to 20,000	r/min	50	S	4 bytes (U32)	W	---	---	---
	08	SOS velocity zero window8	10 to 20,000	r/min	50	S	4 bytes (U32)	W	---	---	---

- Set a limit for monitoring of velocity zero. Set it every SOS commands.
- This object is for SRA parameters.

Index (hex)	Sub-index (hex)	Object name	Setting range	Unit	Default setting	Data attri-bute	Size	Access	PDO map	Com-plete access	Modes of operation
6670	---	SS2 command	---	---	---	---	---	---	---	Not pos-sible	---
	00	Number of entries	---	---	08 hex	---	1 byte (U8)	RO	---	---	---
	01	SS2 command1	0 to 1	---	---	A	1 bit (BOOL)	W	RxPDO, TxPDO	---	---
	02	SS2 command2	0 to 1	---	---	A	1 bit (BOOL)	W	RxPDO, TxPDO	---	---
	03	SS2 command3	0 to 1	---	---	A	1 bit (BOOL)	W	RxPDO, TxPDO	---	---
	04	SS2 command4	0 to 1	---	---	A	1 bit (BOOL)	W	RxPDO, TxPDO	---	---
	05	SS2 command5	0 to 1	---	---	A	1 bit (BOOL)	W	RxPDO, TxPDO	---	---
	06	SS2 command6	0 to 1	---	---	A	1 bit (BOOL)	W	RxPDO, TxPDO	---	---
	07	SS2 command7	0 to 1	---	---	A	1 bit (BOOL)	W	RxPDO, TxPDO	---	---
	08	SS2 command8	0 to 1	---	---	A	1 bit (BOOL)	W	RxPDO, TxPDO	---	---

- It can confirm SS2 function state and give SS2 command.

● Description of Reading and Writing

Access	Description
Read	Gives the SS2 status. 0: Normal status 1: SS2 status
Write	Issues the SS2 command. 0: Activate SS2 1: Reset SS2

Index (hex)	Sub-index (hex)	Object name	Setting range	Unit	Default setting	Data attri-bute	Size	Access	PDO map	Com-plete access	Modes of operation
6671	---	SS2 time to SOS	---	---	---	---	---	---	---	Possible	---
	00	Number of entries	---	---	08 hex	---	1 byte (U8)	RO	---	---	---
	01	SS2 time to SOS 1	---	ms	0	S	2 bytes (U16)	W	---	---	---
	02	SS2 time to SOS 2	---	ms	0	S	2 bytes (U16)	W	---	---	---
	03	SS2 time to SOS 3	---	ms	0	S	2 bytes (U16)	W	---	---	---
	04	SS2 time to SOS 4	---	ms	0	S	2 bytes (U16)	W	---	---	---
	05	SS2 time to SOS 5	---	ms	0	S	2 bytes (U16)	W	---	---	---
	06	SS2 time to SOS 6	---	ms	0	S	2 bytes (U16)	W	---	---	---
	07	SS2 time to SOS 7	---	ms	0	S	2 bytes (U16)	W	---	---	---
	08	SS2 time to SOS 8	---	ms	0	S	2 bytes (U16)	W	---	---	---

- Set a time until SOS function is activated after a Servo Drive receives SS2 command. Set the time every SS2 commands.
- This object is for SRA parameters.

Index (hex)	Sub-index (hex)	Object name	Setting range	Unit	Default setting	Data attri-bute	Size	Access	PDO map	Com-plete access	Modes of operation
6672	---	SS2 time for velocity zero	---	---	---	---	---	---	---	Possible	---
	00	Number of entries	---	---	08 hex	---	1 byte (U8)	RO	---	---	---
	01	SS2 time for velocity zero 1	---	ms	0	S	2 bytes (U16)	W	---	---	---
	02	SS2 time for velocity zero 2	---	ms	0	S	2 bytes (U16)	W	---	---	---
	03	SS2 time for velocity zero 3	---	ms	0	S	2 bytes (U16)	W	---	---	---
	04	SS2 time for velocity zero 4	---	ms	0	S	2 bytes (U16)	W	---	---	---
	05	SS2 time for velocity zero 5	---	ms	0	S	2 bytes (U16)	W	---	---	---
	06	SS2 time for velocity zero 6	---	ms	0	S	2 bytes (U16)	W	---	---	---
	07	SS2 time for velocity zero 7	---	ms	0	S	2 bytes (U16)	W	---	---	---
	08	SS2 time for velocity zero 8	---	ms	0	S	2 bytes (U16)	W	---	---	---

- Set a time to determine a motor stop. If a motor velocity is continuously within SOS velocity zero window, SOS function is activated after the setting time elapses. Set the time every SS2 commands.
- This object is for SRA parameters.

Index (hex)	Sub-index (hex)	Object name	Setting range	Unit	Default setting	Data attri-bute	Size	Access	PDO map	Com-plete access	Modes of operation
6690	---	SLS command	---	---	---	---	---	---	---	Not pos-sible	---
	00	Number of entries	---	---	08 hex	---	1 byte (U8)	RO	---	---	---
	01	SLS command1	0 to 1	---	---	A	1 bit (BOOL)	W	RxPDO, TxPDO	---	---
	02	SLS command2	0 to 1	---	---	A	1 bit (BOOL)	W	RxPDO, TxPDO	---	---
	03	SLS command3	0 to 1	---	---	A	1 bit (BOOL)	W	RxPDO, TxPDO	---	---
	04	SLS command4	0 to 1	---	---	A	1 bit (BOOL)	W	RxPDO, TxPDO	---	---
	05	SLS command5	0 to 1	---	---	A	1 bit (BOOL)	W	RxPDO, TxPDO	---	---
	06	SLS command6	0 to 1	---	---	A	1 bit (BOOL)	W	RxPDO, TxPDO	---	---
	07	SLS command7	0 to 1	---	---	A	1 bit (BOOL)	W	RxPDO, TxPDO	---	---
	08	SLS command8	0 to 1	---	---	A	1 bit (BOOL)	W	RxPDO, TxPDO	---	---

- It can confirm SLS function state and give SLS command.

● Description of Reading and Writing

Access	Description
Read	Gives the SLS status. 0: Normal status 1: SLS status
Write	Issues the SLS command. 0: Activate SLS 1: Reset SLS

Index (hex)	Sub-index (hex)	Object name	Setting range	Unit	Default setting	Data attri-bute	Size	Access	PDO map	Com-plete access	Modes of operation
6691	---	SLS time to velocity monitoring	---	---	---	---	---	---	---	Possible	---
	00	Number of entries	---	---	08 hex	---	1 byte (U8)	RO	---	---	---
	01	SLS time to velocity monitoring 1	---	ms	0	S	2 bytes (U16)	W	---	---	---
	02	SLS time to velocity monitoring 2	---	ms	0	S	2 bytes (U16)	W	---	---	---
	03	SLS time to velocity monitoring 3	---	ms	0	S	2 bytes (U16)	W	---	---	---
	04	SLS time to velocity monitoring 4	---	ms	0	S	2 bytes (U16)	W	---	---	---
	05	SLS time to velocity monitoring 5	---	ms	0	S	2 bytes (U16)	W	---	---	---
	06	SLS time to velocity monitoring 6	---	ms	0	S	2 bytes (U16)	W	---	---	---
	07	SLS time to velocity monitoring 7	---	ms	0	S	2 bytes (U16)	W	---	---	---
	08	SLS time to velocity monitoring 8	---	ms	0	S	2 bytes (U16)	W	---	---	---

- Set a time until SLS function is activated after a Servo Drive receives SLS command.
- This object is for SRA parameters.

Index (hex)	Sub-index (hex)	Object name	Setting range	Unit	Default setting	Data attri-bute	Size	Access	PDO map	Com-plete access	Modes of operation
6693	---	SLS velocity limit	---	---	---	---	---	---	---	Possible	---
	00	Number of entries	---	---	08 hex	---	1 byte (U8)	RO	---	---	---
	01	SLS velocity limit 1	1 to 20,000	r/min	100	S	4 bytes (U32)	W	---	---	---
	02	SLS velocity limit 2	1 to 20,000	r/min	100	S	4 bytes (U32)	W	---	---	---
	03	SLS velocity limit 3	1 to 20,000	r/min	100	S	4 bytes (U32)	W	---	---	---
	04	SLS velocity limit 4	1 to 20,000	r/min	100	S	4 bytes (U32)	W	---	---	---
	05	SLS velocity limit 5	1 to 20,000	r/min	100	S	4 bytes (U32)	W	---	---	---
	06	SLS velocity limit 6	1 to 20,000	r/min	100	S	4 bytes (U32)	W	---	---	---
	07	SLS velocity limit 7	1 to 20,000	r/min	100	S	4 bytes (U32)	W	---	---	---
	08	SLS velocity limit 8	1 to 20,000	r/min	100	S	4 bytes (U32)	W	---	---	---

- Set the velocity limit for monitoring.
- This object is for SRA parameters.

Index (hex)	Sub-index (hex)	Object name	Setting range	Unit	Default setting	Data attri-bute	Size	Access	PDO map	Com-plete access	Modes of operation
6694	---	SLS time for velocity in limits	---	---	---	---	---	---	---	Possible	---
	00	Number of entries	---	---	08 hex	---	1 byte (U8)	RO	---	---	---
	01	SLS time for velocity in limits 1	---	ms	0	S	2 bytes (U16)	W	---	---	---
	02	SLS time for velocity in limits 2	---	ms	0	S	2 bytes (U16)	W	---	---	---
	03	SLS time for velocity in limits 3	---	ms	0	S	2 bytes (U16)	W	---	---	---
	04	SLS time for velocity in limits 4	---	ms	0	S	2 bytes (U16)	W	---	---	---
	05	SLS time for velocity in limits 5	---	ms	0	S	2 bytes (U16)	W	---	---	---
	06	SLS time for velocity in limits 6	---	ms	0	S	2 bytes (U16)	W	---	---	---
	07	SLS time for velocity in limits 7	---	ms	0	S	2 bytes (U16)	W	---	---	---
	08	SLS time for velocity in limits 8	---	ms	0	S	2 bytes (U16)	W	---	---	---

- Set time to determine the monitoring velocity. If the motor velocity is continuously within SLS velocity monitoring limit, SLS function is activated after the setting time elapsed. Set the time every SLS commands.
- This object is for SRA parameters.

Index (hex)	Sub-index (hex)	Object name	Setting range	Unit	Default setting	Data attri-bute	Size	Access	PDO map	Com-plete access	Modes of operation
66A0	---	SLP command	---	---	---	---	---	---	---	Not pos-sible	---
	00	Number of entries	---	---	08 hex	---	1 byte (U8)	RO	---	---	---
	01	SLP command1	0 to 1	---	---	A	1 bit (BOOL)	W	RxPDO, TxPDO	---	---
	02	SLP command2	0 to 1	---	---	A	1 bit (BOOL)	W	RxPDO, TxPDO	---	---
	03	SLP command3	0 to 1	---	---	A	1 bit (BOOL)	W	RxPDO, TxPDO	---	---
	04	SLP command4	0 to 1	---	---	A	1 bit (BOOL)	W	RxPDO, TxPDO	---	---
	05	SLP command5	0 to 1	---	---	A	1 bit (BOOL)	W	RxPDO, TxPDO	---	---
	06	SLP command6	0 to 1	---	---	A	1 bit (BOOL)	W	RxPDO, TxPDO	---	---
	07	SLP command7	0 to 1	---	---	A	1 bit (BOOL)	W	RxPDO, TxPDO	---	---
	08	SLP command8	0 to 1	---	---	A	1 bit (BOOL)	W	RxPDO, TxPDO	---	---

- It can confirm SLP function state and execute SLP command.

● Description of Reading and Writing

Access	Description
Read	Gives the SLP status. 0: Normal status 1: SLP status
Write	Issues the SLP command. 0: Activate SLP 1: Reset SLP

Index (hex)	Sub-index (hex)	Object name	Setting range	Unit	Default setting	Data attri-bute	Size	Access	PDO map	Com-plete access	Modes of operation
66A2	---	SLP position upper limit	---	---	---	---	---	---	---	Possible	---
	00	Number of entries	---	---	08 hex	---	1 byte (U8)	RO	---	---	---
	01	SLP position upper limit 1	---	Encoder unit	62,500	S	4 bytes (INT32)	W	---	---	---
	02	SLP position upper limit 2	---	Encoder unit	62,500	S	4 bytes (INT32)	W	---	---	---
	03	SLP position upper limit 3	---	Encoder unit	62,500	S	4 bytes (INT32)	W	---	---	---
	04	SLP position upper limit 4	---	Encoder unit	62,500	S	4 bytes (INT32)	W	---	---	---
	05	SLP position upper limit 5	---	Encoder unit	62,500	S	4 bytes (INT32)	W	---	---	---
	06	SLP position upper limit 6	---	Encoder unit	62,500	S	4 bytes (INT32)	W	---	---	---
	07	SLP position upper limit 7	---	Encoder unit	62,500	S	4 bytes (INT32)	W	---	---	---
	08	SLP position upper limit 8	---	Encoder unit	62,500	S	4 bytes (INT32)	W	---	---	---

- Set an upper limit for monitoring in SLP function. Set every SLP commands.
- SLP Position Upper Limit is round processed to the multiple numbers of 128 below the setting value. For example, if a setting value is set from 256 to 383, the value is 256.

- This object is for SRA parameters.

Index (hex)	Sub-index (hex)	Object name	Setting range	Unit	Default setting	Data attri-bute	Size	Access	PDO map	Com-plete access	Modes of operation
66A4	---	SLP position lower limit	---	---	---	---	---	---	---	Possible	---
	00	Number of entries	---	---	08 hex	---	1 byte (U8)	RO	---	---	---
	01	SLP position lower limit 1	---	Encoder unit	-62,500	S	4 bytes (INT32)	W	---	---	---
	02	SLP position lower limit 2	---	Encoder unit	-62,500	S	4 bytes (INT32)	W	---	---	---
	03	SLP position lower limit 3	---	Encoder unit	-62,500	S	4 bytes (INT32)	W	---	---	---
	04	SLP position lower limit 4	---	Encoder unit	-62,500	S	4 bytes (INT32)	W	---	---	---
	05	SLP position lower limit 5	---	Encoder unit	-62,500	S	4 bytes (INT32)	W	---	---	---
	06	SLP position lower limit 6	---	Encoder unit	-62,500	S	4 bytes (INT32)	W	---	---	---
	07	SLP position lower limit 7	---	Encoder unit	-62,500	S	4 bytes (INT32)	W	---	---	---
	08	SLP position lower limit 8	---	Encoder unit	-62,500	S	4 bytes (INT32)	W	---	---	---

- Set a lower limit for monitoring in SLP function. Set every SLP commands.
- SLP Position Lower Limit is round processed to the multiple numbers of 128 below the setting value. For example, if a setting value is set from 256 to 383, the value is 256.
- This object is for SRA parameters.

Index (hex)	Sub-index (hex)	Object name	Setting range	Unit	Default setting	Data attri-bute	Size	Access	PDO map	Com-plete access	Modes of operation
66D0	---	SDI positive direction com-mand	0 to 1	---	---	A	1 bit (BOOL)	W	RxPDO, TxPDO	Not pos-sible	---

- Gives positive direction rotation status and issues the SDI positive direction command.

● Description of Reading and Writing

Access	Description
Read	Gives positive direction rotation status. 0: Not rotate to positive direction 1: Rotate to positive direction
Write	Issues the SDI positive direction command. 0: Activate SDI 1: Reset SDI

Index (hex)	Sub-index (hex)	Object name	Setting range	Unit	Default setting	Data attri-bute	Size	Access	PDO map	Com-plete access	Modes of operation
66D1	---	SDI negative direction com-mand	0 to 1	---	---	A	1 bit (BOOL)	W	RxPDO, TxPDO	Not pos-sible	---

- Gives negative direction rotation status and issues the SDI negative direction command.

● Description of Reading and Writing

Access	Description
Read	Gives negative direction rotation status. 0: Not rotate to negative direction 1: Rotate to negative direction
Write	Issues the SDI negative direction command. 0: Activate SDI 1: Reset SDI

Index (hex)	Sub-index (hex)	Object name	Setting range	Unit	Default setting	Data attri-bute	Size	Access	PDO map	Com-plete access	Modes of operation
66D3	---	SDI position zero window	128 to 2,147,483,647	Encoder unit	131,072	S	4 bytes (U32)	W	---	Not pos-sible	---

- Set a monitoring position window when a motor stops.
- A multiple number of 128 which does not exceed the setting value is automatically set to the position zero window. Example: When the setting value is between 256 and 383, 256 is automatically set to the setting value for the operation.
- This object is for SRA parameters.

Index (hex)	Sub-index (hex)	Object name	Setting range	Unit	Default setting	Data attri-bute	Size	Access	PDO map	Com-plete access	Modes of opera-tion
66D5	---	SDI velocity zero window	10 to 20,000	r/min	50	S	4 bytes (U32)	W	---	Not pos-sible	---

- Set a monitoring limit when a motor stops.
- This object is for SRA parameters.

Index (hex)	Sub-index (hex)	Object name	Setting range	Unit	Default setting	Data attri-bute	Size	Access	PDO map	Com-plete access	Modes of operation
E600	---	FSoESlave Frame Elements Axis Ch1	---	---	---	---	---	---	---	Possible	---
	00	Number of entries	---	---	03 hex	---	1 byte (U8)	RO	---	---	---
	01	FSoE Slave CMD	---	---	---	---	1 byte (U8)	RO	TxPDO	---	---
	02	FSoE Slave Con-n_ID	---	---	---	---	2 bytes (U16)	RO	TxPDO	---	---
	03	FSoE Slave CRC_0	---	---	---	---	2 bytes (U16)	RO	TxPDO	---	---

- This object is used to send safety process data.
- Subindex 01 hex **FSoE Slave CMD** gives the command which is sent from the slave.
- Subindex 02 hex **FSoE Slave Conn_ID** gives the connection ID which is sent from the slave.
- Subindex 03 hex **FSoE Slave CRC_0** gives the cyclic redundancy code which is sent from the slave.

Index (hex)	Sub-index (hex)	Object name	Setting range	Unit	Default setting	Data attri-bute	Size	Access	PDO map	Com-plete access	Modes of operation
E601	---	Safety input 1	---	---	---	---	---	---	---	Possible	---
	00	Number of entries	---	---	01 hex	---	1 byte (U8)	RO	---	---	---
	01	Safety Connec-tion Status	---	---	---	---	1 bit (BOOL)	RO	TxPDO	---	---

- This object indicates that the safety connection is in execution.
- When the value is *1*, the safety connection is in execution.

Index (hex)	Sub-index (hex)	Object name	Setting range	Unit	Default setting	Data attri-bute	Size	Access	PDO map	Com-plete access	Modes of operation
E700	---	FSoE Master Frame Ele-ments Axis Ch1	---	---	---	---	---	---	---	Possible	---
	00	Number of entries	---	---	03 hex	---	1 byte (U8)	RO	---	---	---
	01	FSoE Master CMD	00 to FF hex	---	00 hex	A	1 byte (U8)	W	RxPDO	---	---
	02	FSoE Master Conn_ID	0000 to FFFF hex	---	0000 hex	A	2 bytes (U16)	W	RxPDO	---	---
	03	FSoE Master CRC_0	0000 to FFFF hex	---	0000 hex	A	2 bytes (U16)	W	RxPDO	---	---

- This object is used to send safety process data.
- Subindex 01 hex **FSoE Master CMD** gives the command which is sent from the master.
- Subindex 02 hex **FSoE Master Conn_ID** gives the connection ID which is sent from the master.
- Subindex 03 hex **FSoE Master CRC_0** gives the cyclic redundancy code which is sent from the mas-ter.

Index (hex)	Sub-index (hex)	Object name	Setting range	Unit	Default setting	Data attri-bute	Size	Access	PDO map	Com-plete access	Modes of operation
F980	---	Device Safety Address	---	---	---	---	---	---	---	Possible	---
	00	Number of entries	---	---	03 hex	---	1 byte (U8)	RO	---	---	---
	01	FSoE Address	---	---	---	---	2 bytes (U16)	RO	---	---	---
	02	Restore Default FSoE Address	---	---	0	A	5 bytes (VS)	W	---	---	---
	03	FSoE Enable Reset	---	---	0	A	7 bytes (VS)	W	---	---	---

- This object gives and clears the FSoE slave address.
- Subindex 01 hex **FSoE Address** gives the FSoE slave address.
- Subindex 02 hex **Restore Default FSoE Address** restores FSoE slave addresses to their default values by the writing of “reset”.
- Subindex 03 hex **FSoE Enable Reset** resets the FSoE enabled state by the writing of “disable”.

A-3 Object List

- This section describes the profile that is used to control the Servo Drive.
- Some objects are updated by cycling the power supply. After you change these objects, turn OFF the power supply, and then turn ON it again. After you turn OFF the power supply, confirm that the power supply indicator is not lit.
- See below for the data attributes.

A : Always updated
D : Possible to change only when the EtherCAT communications state is Pre-Operational
E : Servo ON
R : Updated when the control power is reset or restarted.
S : Possible to change by Safety Controller setting tools. The changes are reflected when FSoE connection established.
– : Write prohibited

Index (hex)	Sub-index (hex)	Object name	Setting range	Unit	Default setting	Data attri-bute	Size	PDO map
1000	00	Device Type	---	---	000A0192 hex	---	4 bytes (U32)	---
1001	00	Error Register	---	---	00 hex	---	1 byte (U8)	---
1008	00	Manufacturer Device Name	---	---	R88D-1SAN□□□-ECT	---	20 bytes (VS)	---
1009	00	Manufacturer Hardware Version	---	---	---	---	20 bytes (VS)	---
100A	00	Manufacturer Software Version	---	---	---	---	20 bytes (VS)	---
1010	01	Store Parameters	00000000 to FFFFFFFF hex	---	00000001 hex	A	4 bytes (U32)	---
1011	---	Restore Default Parameters	---	---	---	---	---	---
	01	Restore Default Parameters	00000000 to FFFFFFFFHex	---	00000001 hex	A	4 bytes (U32)	---
	03	Restore Default Application Parameters	00000000 to FFFFFFFF hex	---	00000001 hex	A	4 bytes (U32)	---
1018	---	Identity Object	---	---	---	---	---	---
	01	Vendor ID	---	---	00000083 hex	---	4 bytes (U32)	---
	02	Product Code	---	---	---	---	4 bytes (U32)	---
	03	Revision Number	---	---	---	---	4 bytes (U32)	---
	04	Serial Number	---	---	---	---	4 bytes (U32)	---

Index (hex)	Sub-index (hex)	Object name	Setting range	Unit	Default setting	Data attri-bute	Size	PDO map
10F3	---	Diagnosis History	---	---	---	---	---	---
	01	Maximum Messages	---	---	---	---	1 byte (U8)	---
	02	Newest Message	---	---	---	---	1 byte (U8)	---
	03	Newest Acknowledged Message	00 to FF hex	---	00 hex	A	1 byte (U8)	---
	04	New Messages Avail-able	---	---	---	---	1 bit (BOOL)	TxPDO
	05	Flags	0000 to 003F hex	---	0000 hex	A	2 bytes (U16)	---
	06	Diagnosis Message 1	---	---	---	---	30 bytes (OS)	---
	07	Diagnosis Message 2	---	---	---	---	30 bytes (OS)	---
10F3	08	Diagnosis Message 3	---	---	---	---	30 bytes (OS)	---
	09	Diagnosis Message 4	---	---	---	---	30 bytes (OS)	---
	0A	Diagnosis Message 5	---	---	---	---	30 bytes (OS)	---
	0B	Diagnosis Message 6	---	---	---	---	30 bytes (OS)	---
	0C	Diagnosis Message 7	---	---	---	---	30 bytes (OS)	---
	0D	Diagnosis Message 8	---	---	---	---	30 bytes (OS)	---
	0E	Diagnosis Message 9	---	---	---	---	30 bytes (OS)	---
	0F	Diagnosis Message 10	---	---	---	---	30 bytes (OS)	---
	10	Diagnosis Message 11	---	---	---	---	30 bytes (OS)	---
	11	Diagnosis Message12	---	---	---	---	30 bytes (OS)	---
	12	Diagnosis Message 13	---	---	---	---	30 bytes (OS)	---
	13	Diagnosis Message 14	---	---	---	---	30 bytes (OS)	---
	14	Diagnosis Message 15	---	---	---	---	30 bytes (OS)	---
	15	Diagnosis Message 16	---	---	---	---	30 bytes (OS)	---
	16	Diagnosis Message 17	---	---	---	---	30 bytes (OS)	---
	17	Diagnosis Message 18	---	---	---	---	30 bytes (OS)	---
	18	Diagnosis Message 19	---	---	---	---	30 bytes (OS)	---
	19	Diagnosis Message 20	---	---	---	---	30 bytes (OS)	---
10F9	01	Present Time for Event Log	0 to 18,446,744,073, 709,551,615	---	0	A	8 bytes (U64)	---

Index (hex)	Sub-index (hex)	Object name	Setting range	Unit	Default setting	Data attri-bute	Size	PDO map
1600	---	1st receive PDO Map-ping	---	---	---	---	---	---
	00	Number of objects in this PDO	00 to 0A hex	---	03 hex	A	1 byte (U8)	---
	01	1st Output Object to be mapped	---	---	60400010 hex	A	4 bytes (U32)	---
	02	2nd Output Object to be mapped	---	---	607A0020 hex	A	4 bytes (U32)	---
	03	3rd Output Object to be mapped	---	---	60B80010 hex	A	4 bytes (U32)	---
	04	4th Output Object to be mapped	---	---	00000000 hex	A	4 bytes (U32)	---
	05	5th Output Object to be mapped	---	---	00000000 hex	A	4 bytes (U32)	---
	06	6th Output Object to be mapped	---	---	00000000 hex	A	4 bytes (U32)	---
	07	7th Output Object to be mapped	---	---	00000000 hex	A	4 bytes (U32)	---
	08	8th Output Object to be mapped	---	---	00000000 hex	A	4 bytes (U32)	---
	09	9th Output Object to be mapped	---	---	00000000 hex	A	4 bytes (U32)	---
1600	0A	10th Output Object to be mapped	---	---	00000000 hex	A	4 bytes (U32)	---

Index (hex)	Sub-index (hex)	Object name	Setting range	Unit	Default setting	Data attri-bute	Size	PDO map
1610	---	17th receive PDO Map-ping	---	---	---	---	---	---
	00	Number of objects in this PDO	00 to 13 hex	---	13 hex	S	1 byte (U8)	---
	01	1st Output Object to be mapped	---	---	E7000108 hex	S	4 bytes (U32)	---
	02	2nd Output Object to be mapped	---	---	66400001 hex	S	4 bytes (U32)	---
	03	3rd Output Object to be mapped	---	---	66500101 hex	S	4 bytes (U32)	---
	04	4th Output Object to be mapped	---	---	66700101 hex	S	4 bytes (U32)	---
	05	5th Output Object to be mapped	---	---	66680101 hex	S	4 bytes (U32)	---
	06	6th Output Object to be mapped	---	---	00000001 hex	S	4 bytes (U32)	---
	07	7th Output Object to be mapped	---	---	66D00001 hex	S	4 bytes (U32)	---
	08	8th Output Object to be mapped	---	---	66D10001 hex	S	4 bytes (U32)	---
	09	9th Output Object to be mapped	---	---	66320001 hex	S	4 bytes (U32)	---
	0A	10th Output Object to be mapped	---	---	00000001 hex	S	4 bytes (U32)	---
	0B	11th Output Object to be mapped	---	---	00000001 hex	S	4 bytes (U32)	---
	0C	12th Output Object to be mapped	---	---	00000001 hex	S	4 bytes (U32)	---
	0D	13th Output Object to be mapped	---	---	00000001 hex	S	4 bytes (U32)	---
	0E	14th Output Object to be mapped	---	---	00000001 hex	S	4 bytes (U32)	---
	0F	15th Output Object to be mapped	---	---	00000001 hex	S	4 bytes (U32)	---
	10	16th Output Object to be mapped	---	---	00000001 hex	S	4 bytes (U32)	---
	11	17th Output Object to be mapped	---	---	00000001 hex	S	4 bytes (U32)	---
	12	18th Output Object to be mapped	---	---	E7000310 hex	S	4 bytes (U32)	---
	13	19th Output Object to be mapped	---	---	E7000210 hex	S	4 bytes (U32)	---
1701	---	258th receive PDO Map-ping	---	---	---	---	---	---
	00	Number of objects in this PDO	---	---	04 hex	---	1 byte (U8)	---
	01	1st Output Object to be mapped	---	---	60400010 hex	---	4 bytes (U32)	---
	02	2nd Output Object to be mapped	---	---	607A0020 hex	---	4 bytes (U32)	---
	03	3rd Output Object to be mapped	---	---	60B80010 hex	---	4 bytes (U32)	---
	04	4th Output Object to be mapped	---	---	60FE0120 hex	---	4 bytes (U32)	---
1702	---	259th receive PDO Map-ping	---	---	---	---	---	---
	00	Number of objects in this PDO	---	---	07 hex	---	1 byte (U8)	---
	01	1st Output Object to be mapped	---	---	60400010 hex	---	4 bytes (U32)	---

Index (hex)	Sub-index (hex)	Object name	Setting range	Unit	Default setting	Data attri-bute	Size	PDO map
1702	02	2nd Output Object to be mapped	---	---	607A0020 hex	---	4 bytes (U32)	---
	03	3rd Output Object to be mapped	---	---	60FF0020 hex	---	4 bytes (U32)	---
	04	4th Output Object to be mapped	---	---	60710010 hex	---	4 bytes (U32)	---
	05	5th Output Object to be mapped	---	---	60600008 hex	---	4 bytes (U32)	---
	06	6th Output Object to be mapped	---	---	60B80010 hex	---	4 bytes (U32)	---
	07	7th Output Object to be mapped	---	---	607F0020 hex	---	4 bytes (U32)	---
1703	---	260th receive PDO Map-ping	---	---	---	---	---	---
	00	Number of objects in this PDO	---	---	07 hex	---	1 byte (U8)	---
	01	1st Output Object to be mapped	---	---	60400010 hex	---	4 bytes (U32)	---
	02	2nd Output Object to be mapped	---	---	607A0020 hex	---	4 bytes (U32)	---
	03	3rd Output Object to be mapped	---	---	60FF0020 hex	---	4 bytes (U32)	---
	04	4th Output Object to be mapped	---	---	60600008 hex	---	4 bytes (U32)	---
	05	5th Output Object to be mapped	---	---	60B80010 hex	---	4 bytes (U32)	---
	06	6th Output Object to be mapped	---	---	60E00010 hex	---	4 bytes (U32)	---
	07	7th Output Object to be mapped	---	---	60E10010 hex	---	4 bytes (U32)	---
1704	---	261th receive PDO Map-ping	---	---	---	---	---	---
	00	Number of objects in this PDO	---	---	09 hex	---	1 byte (U8)	---
	01	1st Output Object to be mapped	---	---	60400010 hex	---	4 bytes (U32)	---
	02	2nd Output Object to be mapped	---	---	607A0020 hex	---	4 bytes (U32)	---
	03	3rd Output Object to be mapped	---	---	60FF0020 hex	---	4 bytes (U32)	---
	04	4th Output Object to be mapped	---	---	60710010 hex	---	4 bytes (U32)	---
	05	5th Output Object to be mapped	---	---	60600008 hex	---	4 bytes (U32)	---
	06	6th Output Object to be mapped	---	---	60B80010 hex	---	4 bytes (U32)	---
	07	7th Output Object to be mapped	---	---	607F0020 hex	---	4 bytes (U32)	---
	08	8th Output Object to be mapped	---	---	60E00010 hex	---	4 bytes (U32)	---
	09	9th Output Object to be mapped	---	---	60E10010 hex	---	4 bytes (U32)	---
1705	---	262th receive PDO Map-ping	---	---	---	---	---	---
	00	Number of objects in this PDO	---	---	08 hex	---	1 byte (U8)	---
	01	1st Output Object to be mapped	---	---	60400010 hex	---	4 bytes (U32)	---
	02	2nd Output Object to be mapped	---	---	607A0020 hex	---	4 bytes (U32)	---
	03	3rd Output Object to be mapped	---	---	60FF0020 hex	---	4 bytes (U32)	---

Index (hex)	Sub-index (hex)	Object name	Setting range	Unit	Default setting	Data attri-bute	Size	PDO map
1705	04	4th Output Object to be mapped	---	---	60600008 hex	---	4 bytes (U32)	---
	05	5th Output Object to be mapped	---	---	60B80010 hex	---	4 bytes (U32)	---
	06	6th Output Object to be mapped	---	---	60E00010 hex	---	4 bytes (U32)	---
	07	7th Output Object to be mapped	---	---	60E10010 hex	---	4 bytes (U32)	---
	08	8th Output Object to be mapped	---	---	60B20010 hex	---	4 bytes (U32)	---
1A00	---	1st transmit PDO Map-ping	---	---	---	---	---	---
	00	Number of objects in this PDO	00 to 0A hex	---	07 hex	D	1 byte (U8)	---
	01	1st Input Object to be mapped	00000000 to FFFFFFFF hex	---	60410010 hex	D	4 bytes (U32)	---
	02	2nd Input Object to be mapped	00000000 to FFFFFFFF hex	---	60640020 hex	D	4 bytes (U32)	---
	03	3rd Input Object to be mapped	00000000 to FFFFFFFF hex	---	60B90010 hex	D	4 bytes (U32)	---
	04	4th Input Object to be mapped	00000000 to FFFFFFFF hex	---	60BA0020 hex	D	4 bytes (U32)	---
	05	5th Input Object to be mapped	00000000 to FFFFFFFF hex	---	60BC0020 hex	D	4 bytes (U32)	---
	06	6th Input Object to be mapped	00000000 to FFFFFFFF hex	---	603F0010 hex	D	4 bytes (U32)	---
	07	7th Input Object to be mapped	00000000 to FFFFFFFF hex	---	60FD0020 hex	D	4 bytes (U32)	---
	08	8th Input Object to be mapped	00000000 to FFFFFFFF hex	---	00000000 hex	D	4 bytes (U32)	---
	09	9th Input Object to be mapped	00000000 to FFFFFFFF hex	---	00000000 hex	D	4 bytes (U32)	---
	0A	10th Input Object to be mapped	00000000 to FFFFFFFF hex	---	00000000 hex	D	4 bytes (U32)	---
1A10	---	17th transmit PDO Map-ping	---	---	---	---	---	---
	00	Number of objects in this PDO	00 to 13 hex	---	13 hex	S	1 byte (U8)	---
	01	1st Input Object to be mapped	---	---	E6000108 hex	S	4 bytes (U32)	---
	02	2nd Input Object to be mapped	---	---	66400001 hex	S	4 bytes (U32)	---
	03	3rd Input Object to be mapped	---	---	00000001 hex	S	4 bytes (U32)	---
	04	4th Input Object to be mapped	---	---	00000001 hex	S	4 bytes (U32)	---
	05	5th Input Object to be mapped	---	---	66680101 hex	S	4 bytes (U32)	---
	06	6th Input Object to be mapped	---	---	00000001 hex	S	4 bytes (U32)	---
	07	7th Input Object to be mapped	---	---	66D00001 hex	S	4 bytes (U32)	---
	08	8th Input Object to be mapped	---	---	66D10001 hex	S	4 bytes (U32)	---
	09	9th Input Object to be mapped	---	---	66320001 hex	S	4 bytes (U32)	---
	0A	10th Input Object to be mapped	---	---	00000001 hex	S	4 bytes (U32)	---
	0B	11th Input Object to be mapped	---	---	00000001 hex	S	4 bytes (U32)	---
	0C	12th Input Object to be mapped	---	---	00000001 hex	S	4 bytes (U32)	---

Index (hex)	Sub-index (hex)	Object name	Setting range	Unit	Default setting	Data attri-bute	Size	PDO map
1A10	0D	13th Input Object to be mapped	---	---	00000001 hex	S	4 bytes (U32)	---
	0E	14th Input Object to be mapped	---	---	00000001 hex	S	4 bytes (U32)	---
	0F	15th Input Object to be mapped	---	---	00000001 hex	S	4 bytes (U32)	---
	10	16th Input Object to be mapped	---	---	00000001 hex	S	4 bytes (U32)	---
	11	17th Input Object to be mapped	---	---	E6010101 hex	S	4 bytes (U32)	---
	12	18th Input Object to be mapped	---	---	E6000310 hex	S	4 bytes (U32)	---
	13	19th Input Object to be mapped	---	---	E6000210 hex	S	4 bytes (U32)	---
1B01	---	258th transmit PDO Mapping	---	---	---	---	---	---
	00	Number of objects in this PDO	---	---	09 hex	---	1 byte (U8)	---
	01	1st Input Object to be mapped	---	---	603F0010 hex	---	4 bytes (U32)	---
	02	2nd Input Object to be mapped	---	---	60410010 hex	---	4 bytes (U32)	---
	03	3rd Input Object to be mapped	---	---	60640020 hex	---	4 bytes (U32)	---
	04	4th Input Object to be mapped	---	---	60770010 hex	---	4 bytes (U32)	---
	05	5th Input Object to be mapped	---	---	60F40020 hex	---	4 bytes (U32)	---
	06	6th Input Object to be mapped	---	---	60B90010 hex	---	4 bytes (U32)	---
	07	7th Input Object to be mapped	---	---	60BA0020 hex	---	4 bytes (U32)	---
	08	8th Input Object to be mapped	---	---	60BC0020 hex	---	4 bytes (U32)	---
	09	9th Input Object to be mapped	---	---	60FD0020 hex	---	4 bytes (U32)	---
1B02	---	259th transmit PDO Mapping	---	---	---	---	---	---
	00	Number of objects in this PDO	---	---	09 hex	---	1 byte (U8)	---
	01	1st Input Object to be mapped	---	---	603F0010 hex	---	4 bytes (U32)	---
	02	2nd Input Object to be mapped	---	---	60410010 hex	---	4 bytes (U32)	---
	03	3rd Input Object to be mapped	---	---	60640020 hex	---	4 bytes (U32)	---
	04	4th Input Object to be mapped	---	---	60770010 hex	---	4 bytes (U32)	---
	05	5th Input Object to be mapped	---	---	60610008 hex	---	4 bytes (U32)	---
	06	6th Input Object to be mapped	---	---	60B90010 hex	---	4 bytes (U32)	---
	07	7th Input Object to be mapped	---	---	60BA0020 hex	---	4 bytes (U32)	---
	08	8th Input Object to be mapped	---	---	60BC0020 hex	---	4 bytes (U32)	---
	09	9th Input Object to be mapped	---	---	60FD0020 hex	---	4 bytes (U32)	---
1B03	---	260th transmit PDO Mapping	---	---	---	---	---	---
	00	Number of objects in this PDO	---	---	0A hex	---	1 byte (U8)	---

Index (hex)	Sub-index (hex)	Object name	Setting range	Unit	Default setting	Data attri-bute	Size	PDO map
1B03	01	1st Input Object to be mapped	---	---	603F0010 hex	---	4 bytes (U32)	---
	02	2nd Input Object to be mapped	---	---	60410010 hex	---	4 bytes (U32)	---
	03	3rd Input Object to be mapped	---	---	60640020 hex	---	4 bytes (U32)	---
	04	4th Input Object to be mapped	---	---	60770010 hex	---	4 bytes (U32)	---
	05	5th Input Object to be mapped	---	---	60F40020 hex	---	4 bytes (U32)	---
	06	6th Input Object to be mapped	---	---	60610008 hex	---	4 bytes (U32)	---
	07	7th Input Object to be mapped	---	---	60B90010 hex	---	4 bytes (U32)	---
	08	8th Input Object to be mapped	---	---	60BA0020 hex	---	4 bytes (U32)	---
	09	9th Input Object to be mapped	---	---	60BC0020 hex	---	4 bytes (U32)	---
	0A	10th Input Object to be mapped	---	---	60FD0020 hex	---	4 bytes (U32)	---
1B04	---	261th transmit PDO Mapping	---	---	---	---	---	---
	00	Number of objects in this PDO	---	---	0A hex	---	1 byte (U8)	---
	01	1st Input Object to be mapped	---	---	603F0010 hex	---	4 bytes (U32)	---
	02	2nd Input Object to be mapped	---	---	60410010 hex	---	4 bytes (U32)	---
	03	3rd Input Object to be mapped	---	---	60640020 hex	---	4 bytes (U32)	---
	04	4th Input Object to be mapped	---	---	60770010 hex	---	4 bytes (U32)	---
	05	5th Input Object to be mapped	---	---	60610008 hex	---	4 bytes (U32)	---
	06	6th Input Object to be mapped	---	---	60B90010 hex	---	4 bytes (U32)	---
	07	7th Input Object to be mapped	---	---	60BA0020 hex	---	4 bytes (U32)	---
	08	8th Input Object to be mapped	---	---	60BC0020 hex	---	4 bytes (U32)	---
	09	9th Input Object to be mapped	---	---	60FD0020 hex	---	4 bytes (U32)	---
	0A	10th Input Object to be mapped	---	---	606C0020 hex	---	4 bytes (U32)	---
1B20	---	289th transmit PDO Mapping	---	---	---	---	---	---
	00	Number of objects in this PDO	---	---	02 hex	---	1 byte (U8)	---
	01	1st Input Object to be mapped	---	---	41308210 hex	---	4 bytes (U32)	---
	02	2nd Input Object to be mapped	---	---	41308310 hex	---	4 bytes (U32)	---
1BFF	---	512th transmit PDO Mapping	---	---	---	---	---	---
	00	Number of objects in this PDO	---	---	01 hex	---	1 byte (U8)	---
	01	1st Input Object to be mapped	---	---	20020108 hex	---	4 bytes (U32)	---
1C00	---	Sync Manager Commu-nication Type	---	---	---	---	---	---
	00	Number of used Sync Manager channels	---	---	04 hex	---	1 byte (U8)	---

Index (hex)	Sub-index (hex)	Object name	Setting range	Unit	Default setting	Data attri-bute	Size	PDO map
1C00	01	Communication Type Sync Manager 0	---	---	01 hex	---	1 byte (U8)	---
	02	Communication Type Sync Manager 1	---	---	02 hex	---	1 byte (U8)	---
	03	Communication Type Sync Manager 2	---	---	03 hex	---	1 byte (U8)	---
	04	Communication Type Sync Manager 3	---	---	04 hex	---	1 byte (U8)	---
1C12	---	Sync Manager 2 PDO Assignment	---	---	---	---	---	---
	00	Number of assigned PDOs	00 to 03 hex	---	02 hex	D	1 byte (U8)	---
	01	1st PDO Mapping Object Index of assigned PDO	0000 to 17FF hex	---	1701 hex	D	2 bytes (U16)	---
	02	2nd PDO Mapping Object Index of assigned PDO	0000 to 17FF hex	---	1610 hex	D	2 bytes (U16)	---
	03	3rd PDO Mapping Object Index of assigned PDO	0000 to 17FF hex	---	0000 hex	D	2 bytes (U16)	---
1C13	---	Sync Manager 3 PDO Assignment	---	---	---	---	---	---
	00	Number of assigned PDOs	00 to 04 hex	---	03 hex	D	1 byte (U8)	---
	01	1st PDO Mapping Object Index of assigned PDO	0000 to 1BFF hex	---	1B01 hex	D	2 bytes (U16)	---
	02	2nd PDO Mapping Object Index of assigned PDO	0000 to 1BFF hex	---	1B20 hex	D	2 bytes (U16)	---
	03	3rd PDO Mapping Object Index of assigned PDO	0000 to 1BFF hex	---	1A10 hex	D	2 bytes (U16)	---
	04	4th PDO Mapping Object Index of assigned PDO	0000 to 1BFF hex	---	0000 hex	D	2 bytes (U16)	---
1C32	---	Sync Manager 2 Syn-chronization	---	---	---	---	---	---
	00	Number of Synchroniza-tion Parameters	---	---	0C hex	---	1 byte (U8)	---
	01	Synchronization Type	0000 to 0003 hex	---	0000 hex	A	2 bytes (U16)	---
	02	Cycle Time	---	ns	---	---	4 bytes (U32)	---
	03	Shift Time	0000 0000 to FFFF FFFF hex	ns	0	A	4 bytes (U32)	---
	04	Synchronization Types supported	---	---	0006 hex	---	2 bytes (U16)	---
	05	Minimum Cycle Time	---	ns	125,000	---	4 bytes (U32)	---
	06	Calc and Copy Time	---	ns	125,000	---	4 bytes (U32)	---
	09	Delay Time	---	ns	31,250	---	4 bytes (U32)	---
	0B	SM-Event Missed	---	---	0	---	2 bytes (U16)	---
	0C	Cycle Time Too Small	---	---	---	---	2 bytes (U16)	---
1C33	---	Sync Manager 3 Syn-chronization	---	---	---	---	---	---
	00	Number of Synchroniza-tion Parameters	---	---	0C hex	---	1 byte (U8)	---
	01	Synchronization Type	0000 to 0003 hex	---	0000 hex	A	2 bytes (U16)	---
	02	Cycle Time	---	ns	---	---	4 bytes (U32)	---

Index (hex)	Sub-index (hex)	Object name	Setting range	Unit	Default setting	Data attri-bute	Size	PDO map
1C33	03	Shift Time	---	ns	0	A	4 bytes (U32)	---
	04	Synchronization Types supported	---	---	0026 hex	---	2 bytes (U16)	---
	05	Minimum Cycle Time	---	ns	125,000	---	4 bytes (U32)	---
	06	Calc and Copy Time	---	ns	125,000	---	4 bytes (U32)	---
	09	Delay Time	---	ns	31,250	---	4 bytes (U32)	---
	0B	SM-Event Missed	---	---	0	---	2 bytes (U16)	---
	0C	Cycle Time Too Small	---	---	---	---	2 bytes (U16)	---
2002	---	Sysmac Error	---	---	---	---	---	---
	01	Sysmac Error Status	---	---	---	---	1 byte (U8)	TxPDO
	02	Sysmac Error Status Clear	00 to 01 hex	---	00 hex	A	1 byte (U8)	---
2003	---	Sysmac Observation	---	---	---	---	---	---
	01	Observation 1	---	---	---	---	12 bytes (OS)	---
	02	Observation 2	---	---	---	---	12 bytes (OS)	---
	03	Observation 3	---	---	---	---	12 bytes (OS)	---
	04	Observation 4	---	---	---	---	12 bytes (OS)	---
	05	Observation 5	---	---	---	---	12 bytes (OS)	---
2004	---	Sysmac Minor Fault	---	---	---	---	---	---
	01	Minor Fault 1	---	---	---	---	12 bytes (OS)	---
	02	Minor Fault 2	---	---	---	---	12 bytes (OS)	---
	03	Minor Fault 3	---	---	---	---	12 bytes (OS)	---
	04	Minor Fault 4	---	---	---	---	12 bytes (OS)	---
	05	Minor Fault 5	---	---	---	---	12 bytes (OS)	---
2100	00	Error History Clear	00000000 to FFFFFFFF hex	---	00000000 hex	A	4 bytes (U32)	---
2200	00	Communications Error Setting	00 to 0F hex	Times	1	R	1 byte (U8)	---
2201	00	Sync Not Received Tim-eout Setting	0 to 600	s	0	R	2 bytes (U16)	---
2400	---	Unit Restart	---	---	---	---	---	---
	01	Unit Restart	00000000 to FFFFFFFF hex	---	0	A	6 bytes (VS)	---
3000	---	Basic Functions	---	---	---	---	---	---
	01	Motor Rotation Direction Selection	0 to 1	---	1	R	4 bytes (INT32)	---
	02	Control Mode Selection	---	---	0	---	4 bytes (INT32)	---
	03	Control Method Selec-tion	0 to 1	---	1	E	4 bytes (INT32)	---
	04	Function Settings (Mir-ror object of 60DA hex)	---	---	00000001 hex	A	4 bytes (U32)	---
	81	Function Status	---	---	---	---	4 bytes (U32)	TxPDO

Index (hex)	Sub-index (hex)	Object name	Setting range	Unit	Default setting	Data attri-bute	Size	PDO map
3000	82	Motor Stop Cause	---	---	---	---	4 bytes (INT32)	---
	83	Modes of Operation Dis-play (Mirror object of 6061 hex)	---	---	---	---	1 byte (INT8)	---
	84	Supported Functions (Mirror object of 60D9 hex)	---	---	00000001 hex	---	4 bytes (U32)	---
	85	Supported Drive Modes (Mirror object of 6502 hex)	---	---	000003A5 hex	---	4 bytes (U32)	---
	F1	Controlword (Mirror object of 6040 hex)	0000 to FFFF hex	---	0000 hex	A	2 bytes (U16)	---
	F2	Modes of Operation (Mir-ror object of 6060 hex)	0 to 10	---	0	A	1 byte (INT8)	---
	FF	Statusword (Mirror object of 6041 hex)	---	---	---	---	2 bytes (U16)	---
3001	---	Machine	---	---	---	---	---	---
	01	Inertia Ratio	0 to 30,000	%	250	A	4 bytes (INT32)	---
	02	Backlash Compensation Selection	0 to 2	---	0	R	4 bytes (INT32)	---
	03	Backlash Compensation Amount	-262,144 to 262,143	Command unit	0	E	4 bytes (INT32)	---
	04	Backlash Compensation Time Constant	0 to 6,400	0.01 ms	0	E	4 bytes (INT32)	---
	05	Motor Revolutions (Mir-ror object of 6091-01 hex)	0 to 1,073,741,824	---	1	R	4 bytes (U32)	---
	06	Shaft Revolutions (Mirror object of 6091-02 hex)	1 to 1,073,741,824	---	1	R	4 bytes (U32)	---
	81	Inertia Ratio Display	---	%	---	---	4 bytes (INT32)	---
3002	---	Optimized Parameters	---	---	---	---	---	---
	F1	Apply Parameters	---	---	00000000 hex	A	4 bytes (INT32)	---
	F2	Execution Status	---	---	---	---	4 bytes (INT32)	---
3010	---	Position Command	---	---	---	---	---	---
	81	Position Demand Value (Mirror object of 6062 hex)	---	Command unit	---	---	4 bytes (INT32)	---
	82	Position Demand Inter-nal Value (Mirror object of 60FC hex)	---	Encoder unit	---	---	4 bytes (INT32)	---
	83	Velocity	---	Command unit/s	---	---	4 bytes (INT32)	---
	84	Motor Velocity	---	r/min	---	---	4 bytes (INT32)	---
	85	Motor Velocity After Position Command Fil-tering	---	r/min	---	---	4 bytes (INT32)	---
	86	Motor Velocity After Damping Filtering	---	r/min	---	---	4 bytes (U32)	---
	87	Reference Position for csp	---	Command unit	0	---	4 bytes (U32)	TxPDO
	91	Following Error	---	Command unit	---	---	4 bytes (U32)	---
	F1	Target Position (Mirror object of 607A hex)	-2,147,483,648 to 2,147,483,647	Command unit	0	A	4 bytes (INT32)	---

Index (hex)	Sub-index (hex)	Object name	Setting range	Unit	Default setting	Data attri-bute	Size	PDO map
3010	F2	Position Offset (Mirror object of 60B0 hex)	-2,147,483,648 to 2,147,483,647	Command unit	0	A	4 bytes (INT32)	---
3011	---	Position Command Filter	---	---	---	---	---	---
	01	FIR Filter Enable	0 to 1	---	0	A	4 bytes (INT32)	---
	02	FIR Filter Moving Aver-age Time	1 to 10,000	0.1 ms	1	A	4 bytes (INT32)	---
	03	IIR Filter Enable	0 to 1	---	1	A	4 bytes (INT32)	---
	04	IIR Filter Cutoff Fre-quency	10 to 50,000	0.1 Hz	219	A	4 bytes (INT32)	---
3012	---	Damping Control	---	---	---	---	---	---
	01	Damping Filter 1 Selec-tion	0 to 4	---	0	A	4 bytes (INT32)	---
	02	Damping Filter 2 Selec-tion	0 to 4	---	0	A	4 bytes (INT32)	---
3013	---	Damping Filter 1	---	---	---	---	---	---
	01	1st Frequency	5 to 3,000	0.1 Hz	3,000	A	4 bytes (INT32)	---
	02	1st Damping Time Coef-ficient	50 to 200	1%	100	A	4 bytes (INT32)	---
	03	2nd Frequency	5 to 3,000	0.1 Hz	3,000	A	4 bytes (INT32)	---
	04	2nd Damping Time Coef-ficient	50 to 200	1%	100	A	4 bytes (INT32)	---
	05	3rd Frequency	5 to 3,000	0.1 Hz	3,000	A	4 bytes (INT32)	---
	06	3rd Damping Time Coef-ficient	50 to 200	1%	100	A	4 bytes (INT32)	---
	07	4th Frequency	5 to 3,000	0.1 Hz	3,000	A	4 bytes (INT32)	---
	08	4th Damping Time Coef-ficient	50 to 200	1%	100	A	4 bytes (INT32)	---
3014	---	Damping Filter 2	---	---	---	---	---	---
	01	1st Frequency	5 to 3,000	0.1 Hz	3,000	A	4 bytes (INT32)	---
	02	1st Damping Time Coef-ficient	50 to 200	1%	100	A	4 bytes (INT32)	---
	03	2nd Frequency	5 to 3,000	0.1 Hz	3,000	A	4 bytes (INT32)	---
	04	2nd Damping Time Coef-ficient	50 to 200	1%	100	A	4 bytes (INT32)	---
	05	3rd Frequency	5 to 3,000	0.1 Hz	3,000	A	4 bytes (INT32)	---
	06	3rd Damping Time Coef-ficient	50 to 200	1%	100	A	4 bytes (INT32)	---
	07	4th Frequency	5 to 3,000	0.1 Hz	3,000	A	4 bytes (INT32)	---
	08	4th Damping Time Coef-ficient	50 to 200	1%	100	A	4 bytes (INT32)	---
3020	---	Velocity Command	---	---	---	---	---	---
	82	Motor Velocity	---	r/min	---	---	4 bytes (INT32)	---
	83	Motor Velocity After Velocity Command Fil-tering	---	r/min	---	---	4 bytes (INT32)	---
	92	Motor Velocity Deviation	---	r/min	---	---	4 bytes (INT32)	---

Index (hex)	Sub-index (hex)	Object name	Setting range	Unit	Default setting	Data attri-bute	Size	PDO map
3020	F1	Target Velocity (Mirror object of 60FF hex)	-2,147,483,648 to 2,147,483,647	Command unit/s	0	A	4 bytes (INT32)	---
	F2	Velocity Offset (Mirror object of 60B1 hex)	-2,147,483,648 to 2,147,483,647	Command unit/s	0	A	4 bytes (INT32)	---
3021	---	Velocity Command Filter	---	---	---	---	---	---
	01	Acceleration Time	0 to 10,000	ms	0	E	4 bytes (INT32)	---
	02	Deceleration Time	0 to 10,000	ms	0	E	4 bytes (INT32)	---
	03	IIR Filter Enable	0 to 1	---	0	A	4 bytes (INT32)	---
	04	Filter Cutoff Frequency	10 to 50,000	0.1 Hz	50,000	E	4 bytes (INT32)	---
3030	---	Torque Command	---	---	---	---	---	---
	81	Torque	---	0.1%	---	---	4 bytes (INT32)	---
	F1	Target Torque (Mirror object of 6071 hex)	-5,000 to 5,000	0.1%	0	A	2 bytes (INT16)	---
	F2	Torque Offset (Mirror object of 60B2 hex)	-5,000 to 5,000	0.1%	0	A	2 bytes (INT16)	---
3031	---	Velocity Limit in Torque Control	---	---	---	---	---	---
	01	Velocity Limit Value	0 to 20,000	r/min	20,000	A	4 bytes (INT32)	---
	82	Status	---	---	0	---	4 bytes (INT32)	---
3040	---	Profile Command	---	---	---	---	---	---
	F1	Max Profile Velocity (Mirror object of 607F hex)	0 to 2,147,483,647	Command unit/s	2,147,483,647	A	4 bytes (U32)	---
	F2	Profile Velocity (Mirror object of 6081 hex)	0 to 2,147,483,647	Command unit/s	0	A	4 bytes (U32)	---
	F3	Profile Acceleration (Mirror object of 6083 hex)	1 to 2,147,483,647	Command unit/s^2	125,000	A	4 bytes (U32)	---
	F4	Profile Deceleration (Mirror object of 6084 hex)	1 to 2,147,483,647	Command unit/s^2	125,000	A	4 bytes (U32)	---
3041	---	Command Dividing Function	---	---	---	---	---	---
	01	Operation Selection in csv	0 to 1	---	0	R	4 bytes (INT32)	---
	02	Interpolation Time Period Value (Mirror object of 60C2-01 hex)	0 to 255	---	1	E	1 byte (U8)	---
	03	Interpolation Time Index (Mirror object of 60C2-02 hex)	-128 to 63	---	-3	E	1 byte (INT8)	---
	10	Interpolation Method Selection in csp	0 to 1	---	0	A	4 bytes (INT32)	---
3112	---	ODF Velocity Feed-forward	---	---	---	---	---	---
	01	Gain	0 to 1,000	0.1%	300	A	4 bytes (INT32)	---
	02	LPF Enable	0 to 1	---	0	A	4 bytes (INT32)	---
	03	LPF Cutoff Frequency	10 to 50,000	0.1 Hz	50,000	A	4 bytes (INT32)	---
	E1	Gain Command	0 to 1,000	0.1%	300	A	4 bytes (INT32)	RxPDO

Index (hex)	Sub-index (hex)	Object name	Setting range	Unit	Default setting	Data attri-bute	Size	PDO map
3112	E2	LPF Cutoff Frequency Command	10 to 50,000	0.1 Hz	50,000	A	4 bytes (INT32)	RxPDO
3113	---	ODF Torque Feed-forward	---	---	---	---	---	---
	01	Gain	0 to 1,000	0.1%	0	A	4 bytes (INT32)	---
	02	LPF Enable	0 to 1	---	0	A	4 bytes (INT32)	---
	03	LPF Cutoff Frequency	10 to 50,000	0.1 Hz	50,000	A	4 bytes (INT32)	---
	E1	Gain Command	0 to 1,000	0.1%	---	A	4 bytes (INT32)	RxPDO
	E2	LPF Cutoff Frequency Command	10 to 50,000	0.1 Hz	---	A	4 bytes (INT32)	RxPDO
3120	---	TDF Position Control	---	---	---	---	---	---
	01	Command Following Gain	10 to 5000	%	50	A	4 bytes (INT32)	---
	10	Command Following Gain Selection	0 to 1	---	0	A	4 bytes (INT32)	---
	11	Command Following Gain 2	1 to 50,000	0.1 Hz	219	A	4 bytes (INT32)	---
3121	---	TDF Velocity Control	---	---	---	---	---	---
	01	Command Following Gain	10 to 5000	%	100	A	4 bytes (INT32)	---
	10	Command Following Gain Selection	0 to 1	---	0	A	4 bytes (INT32)	---
	11	Command Following Gain 2	1 to 50,000	0.1 Hz	219	A	4 bytes (INT32)	---
3210	---	Internal Position Com-mand	---	---	---	---	---	---
	81	Position	---	Command unit	---	---	4 bytes (INT32)	---
	84	Motor Velocity	---	r/min	---	---	4 bytes (INT32)	---
	91	Following Error Actual Value (Mirror object of 60F4 hex)	---	Command unit	---	---	4 bytes (INT32)	---
	92	Following Error Actual Internal Value	---	Encoder unit	---	---	4 bytes (INT32)	---
3211	---	Position Detection	---	---	---	---	---	---
	81	Position Actual Value (Mirror object of 6064 hex)	---	Command unit	---	---	4 bytes (INT32)	---
	82	Position Actual Internal Value (Mirror object of 6063 hex)	---	Encoder unit	---	---	4 bytes (INT32)	---
	83	Present Position Time Stamp	---	ns	---	---	8 bytes (U64)	TxPDO
3212	---	Gain Switching in Posi-tion Control	---	---	---	---	---	---
	01	Mode Selection	0 to 3	---	0	E	4 bytes (INT32)	---
	02	Delay Time	0 to 10,000	0.1 ms	50	E	4 bytes (INT32)	---
	03	Speed	0 to 20,000	r/min	50	E	4 bytes (INT32)	---
	04	Time	0 to 10,000	0.1 ms	100	E	4 bytes (INT32)	---
3213	---	1st Position Control Gain	---	---	---	---	---	---
	01	Proportional Gain	0 to 5,000	0.1 Hz	44	A	4 bytes (INT32)	---

Index (hex)	Sub-index (hex)	Object name	Setting range	Unit	Default setting	Data attri-bute	Size	PDO map
3213	E1	Proportional Gain Com-mand	0 to 5,000	0.1 Hz	44	A	4 bytes (INT32)	RxPDO
3214	---	2nd Position Control Gain	---	---	---	---	---	---
	01	Proportional Gain	0 to 5,000	0.1 Hz	44	A	4 bytes (INT32)	---
	E1	Proportional Gain Com-mand	0 to 5,000	0.1 Hz	44	A	4 bytes (INT32)	RxPDO
3220	---	Internal Velocity Com-mand	---	---	---	---	---	---
	81	Velocity Demand Value (Mirror object of 606B hex)	---	Command unit/s	---	---	4 bytes (INT32)	---
	82	Motor Velocity	---	r/min	---	---	4 bytes (INT32)	---
	83	Control Effort (Mirror object of 60FA hex)	---	Command unit/s	---	---	4 bytes (INT32)	---
	92	Motor Velocity Deviation	---	r/min	---	---	4 bytes (INT32)	---
3221	---	Velocity Detection	---	---	---	---	---	---
	81	Velocity Actual Value (Mirror object of 606C hex)	---	Command unit/s	---	---	4 bytes (INT32)	---
	82	Present Motor Velocity	---	r/min	---	---	4 bytes (INT32)	TxPDO
	83	Acceleration	---	rad/s^2	---	---	4 bytes (INT32)	---
3222	---	Gain Switching in Veloc-ity Control	---	---	---	---	---	---
	01	Mode Selection	0 to 2	---	0	E	4 bytes (INT32)	---
3223	---	1st Velocity Control Gain	---	---	---	---	---	---
	01	Proportional Gain	0 to 30,000	0.1 Hz	219	A	4 bytes (INT32)	---
	02	Integral Gain	0 to 16,000	0.1 Hz	55	A	4 bytes (INT32)	---
	E1	Proportional Gain Com-mand	0 to 30,000	0.1 Hz	219	A	4 bytes (INT32)	RxPDO
	E2	Integral Gain Command	0 to 16,000	0.1 Hz	55	A	4 bytes (INT32)	RxPDO
3224	---	2nd Velocity Control Gain	---	---	---	---	---	---
	01	Proportional Gain	0 to 30,000	0.1 Hz	219	A	4 bytes (INT32)	---
	02	Integral Gain	0 to 16,000	0.1 Hz	55	A	4 bytes (INT32)	---
	E1	Proportional Gain Com-mand	0 to 30,000	0.1 Hz	219	A	4 bytes (INT32)	RxPDO
	E2	Integral Gain Command	0 to 16,000	0.1 Hz	55	A	4 bytes (INT32)	RxPDO
3230	---	Internal Torque Com-mand	---	---	---	---	---	---
	81	Torque Demand (Mirror object of 6074 hex)	---	0.1%	---	---	2 bytes (INT16)	---
3231	---	Torque Detection	---	---	---	---	---	---
	81	Torque Actual Value (Mirror object of 6077 hex)	---	0.1%	---	---	2 bytes (INT16)	---
3232	---	Filter Switching in Torque Control	---	---	---	---	---	---
	01	Mode Selection	0 to 2	---	0	E	4 bytes (INT32)	---

Index (hex)	Sub-index (hex)	Object name	Setting range	Unit	Default setting	Data attri-bute	Size	PDO map
3233	---	1st Torque Command Filter	---	---	---	---	---	---
	01	Enable	0 to 1	---	1	A	4 bytes (INT32)	---
	02	Cutoff Frequency	10 to 50,000	0.1 Hz	1,536	A	4 bytes (INT32)	---
	E1	Cutoff Frequency Com-mand	10 to 50,000	0.1 Hz	1,536	A	4 bytes (INT32)	RxPDO
3234	---	2nd Torque Command Filter	---	---	---	---	---	---
	01	Enable	0 to 1	---	0	A	4 bytes (INT32)	---
	02	Cutoff Frequency	10 to 50,000	0.1 Hz	1,536	A	4 bytes (INT32)	---
	E1	Cutoff Frequency Com-mand	10 to 50,000	0.1 Hz	1,536	A	4 bytes (INT32)	RxPDO
3310	---	Torque Compensation	---	---	---	---	---	---
	01	Viscous Friction Coeffi-cient	0 to 1,000	0.1%	0	A	4 bytes (INT32)	---
	02	Unbalanced Load Com-pensation	-1,000 to 1,000	0.1%	0	A	4 bytes (INT32)	---
	03	Positive Dynamic Fric-tion Compensation	0 to 1,000	0.1%	0	A	4 bytes (INT32)	---
	04	Negative Dynamic Fric-tion Compensation	0 to 1,000	0.1%	0	A	4 bytes (INT32)	---
	81	Viscous Friction Coeffi-cient Display	---	0.1%	---	---	4 bytes (INT32)	---
	82	Unbalanced Load Com-pensation Display	---	0.1%	---	---	4 bytes (INT32)	---
	83	Positive Dynamic Fric-tion Compensation Dis-play	---	0.1%	---	---	4 bytes (INT32)	---
	84	Negative Dynamic Fric-tion Compensation Dis-play	---	0.1%	---	---	4 bytes (INT32)	---
3320	---	Adaptive Notch Filter	---	---	---	---	---	---
	01	Adaptive Notch Selec-tion	0 to 4	---	0	A	4 bytes (INT32)	---
	03	Resonance Detection Threshold	0 to 500	%	4	A	4 bytes (INT32)	---
3321	---	1st Notch Filter	---	---	---	---	---	---
	01	Enable	0 to 1	---	0	A	4 bytes (INT32)	---
	02	Frequency	500 to 50,000	0.1 Hz	50,000	A	4 bytes (INT32)	---
	03	Q-value	50 to 1,000	0.01	140	A	4 bytes (INT32)	---
	04	Depth	0 to 60	dB	60	A	4 bytes (INT32)	---
	81	Enable Display	---	---	---	---	4 bytes (INT32)	---
	82	Frequency Display	---	0.1 Hz	---	---	4 bytes (INT32)	---
	83	Q-value Display	---	0.01	---	---	4 bytes (INT32)	---
	84	Depth Display	---	dB	---	---	4 bytes (INT32)	---
3322	---	2nd Notch Filter	---	---	---	---	---	---
	01	Enable	0 to 1	---	0	A	4 bytes (INT32)	---

Index (hex)	Sub-index (hex)	Object name	Setting range	Unit	Default setting	Data attri-bute	Size	PDO map
3322	02	Frequency	500 to 50,000	0.1Hz	50,000	A	4 bytes (INT32)	---
	03	Q-value	50 to 1,000	0.01	140	A	4 bytes (INT32)	---
	04	Depth	0 to 60	dB	60	A	4 bytes (INT32)	---
	81	Enable Display	---	---	---	---	4 bytes (INT32)	---
	82	Frequency Display	---	0.1 Hz	---	---	4 bytes (INT32)	---
	83	Q-value Display	---	0.01	---	---	4 bytes (INT32)	---
	84	Depth Display	---	dB	---	---	4 bytes (INT32)	---
3323	---	3rd Notch Filter	---	---	---	---	---	---
	01	Enable	0 to 1	---	0	A	4 bytes (INT32)	---
	02	Frequency	500 to 50,000	0.1Hz	50,000	A	4 bytes (INT32)	---
	03	Q-value	50 to 1,000	0.01	140	A	4 bytes (INT32)	---
	04	Depth	0 to 60	dB	60	A	4 bytes (INT32)	---
	81	Enable Display	---	---	---	---	4 bytes (INT32)	---
	82	Frequency Display	---	0.1 Hz	---	---	4 bytes (INT32)	---
	83	Q-value Display	---	0.01	---	---	4 bytes (INT32)	---
	84	Depth Display	---	dB	---	---	4 bytes (INT32)	---
3324	---	4th Notch Filter	---	---	---	---	---	---
	01	Enable	0 to 1	---	0	A	4 bytes (INT32)	---
	02	Frequency	500 to 50,000	0.1Hz	50,000	A	4 bytes (INT32)	---
	03	Q-value	50 to 1,000	0.01	140	A	4 bytes (INT32)	---
	04	Depth	0 to 60	dB	60	A	4 bytes (INT32)	---
	81	Enable Display	---	---	---	---	4 bytes (INT32)	---
	82	Frequency Display	---	0.1 Hz	---	---	4 bytes (INT32)	---
	83	Q-value Display	---	0.01	---	---	4 bytes (INT32)	---
	84	Depth Display	---	dB	---	---	4 bytes (INT32)	---
3330	---	Torque Limit	---	---	---	---	---	---
	01	Switching Selection	0 to 2	---	0	A	4 bytes (INT32)	---
	02	Max Torque	0 to 5,000	0.1%	5,000	A	2 bytes (U16)	---
	03	Positive Torque Limit Value	0 to 5,000	0.1%	5,000	A	2 bytes (U16)	---
	04	Negative Torque Limit Value	0 to 5,000	0.1%	5,000	A	2 bytes (U16)	---
	05	Positive Torque Limit Value 2	0 to 5,000	0.1%	5,000	A	2 bytes (U16)	---
	06	Negative Torque Limit Value 2	0 to 5,000	0.1%	5,000	A	2 bytes (U16)	---

Index (hex)	Sub-index (hex)	Object name	Setting range	Unit	Default setting	Data attri-bute	Size	PDO map
3330	81	Status	---	---	---	---	4 bytes (INT32)	---
3A00	---	Homing	---	---	---	---	---	---
	01	Zero Position Range	0 to 2,147,483,647	Command unit	1,000	A	4 bytes (INT32)	---
	02	Homing Method (Mirror object of 6098 hex)	0 to 37	---	0	A	1 byte (INT8)	---
	03	Speed During Search for Switch (Mirror object of 6099-01 hex)	1 to 2,147,483,647	Command unit/s	625	A	4 bytes (U32)	---
	04	Speed During Search for Zero (Mirror object of 6099-02 hex)	1 to 2,147,483,647	Command unit/s	625	A	4 bytes (U32)	---
	05	Homing Acceleration (Mirror object of 609A hex)	1 to 2,147,483,647	Command unit/s^2	125,000	A	4 bytes (U32)	---
	06	Home Offset (Mirror object of 607C hex)	-2,147,483,648 to 2,147,483,647	Command unit	0	R	4 bytes (INT32)	---
	81	Homing Status	---	---	---	---	4 bytes (INT32)	---
	82	Homing Method Monitor	---	---	---	---	4 bytes (INT32)	---
	83	1st Supported Homing Method (Mirror object of 60E3-01 hex)	---	---	8	---	2 bytes (INT16)	---
	84	2nd Supported Homing Method (Mirror object of 60E3-02 hex)	---	---	12	---	2 bytes (INT16)	---
	85	3rd Supported Homing Method (Mirror object of 60E3-03 hex)	---	---	19	---	2 bytes (INT16)	---
	86	4th Supported Homing Method (Mirror object of 60E3-04 hex)	---	---	20	---	2 bytes (INT16)	---
	87	5th Supported Homing Method (Mirror object of 60E3-05 hex)	---	---	33	---	2 bytes (INT16)	---
	88	6th Supported Homing Method (Mirror object of 60E3-06 hex)	---	---	34	---	2 bytes (INT16)	---
	89	7th Supported Homing Method (Mirror object of 60E3-07 hex)	---	---	37	---	2 bytes (INT16)	---
3B10	---	Drive Prohibition	---	---	---	---	---	---
	01	Enable	0 to 1	---	0	E	4 bytes (INT32)	---
	02	Stop Selection	2 or 4	---	2	E	4 bytes (INT32)	---
3B11	---	Software Position Limit	---	---	---	---	---	---
	01	Enable Selection	0 to 3	---	0	E	4 bytes (INT32)	---
	02	Stop Selection	2 or 4	---	2	E	4 bytes (INT32)	---
	03	Min Position Limit (Mirror object of 607D-01 hex)	-2,147,483,648 to 2,147,483,647	Command unit	-62,500	E	4 bytes (INT32)	---
	04	Max Position Limit (Mirror object of 607D-02 hex)	-2,147,483,648 to 2,147,483,647	Command unit	62,500	E	4 bytes (INT32)	---
	81	Status	---	---	---	---	4 bytes (INT32)	---

Index (hex)	Sub-index (hex)	Object name	Setting range	Unit	Default setting	Data attri-bute	Size	PDO map
3B20	---	Stop Selection	---	---	---	---	---	---
	01	Shutdown Option Code (Mirror object of 605B hex)	-7 to 0	---	-5	E	2 bytes (INT16)	---
	02	Disable Operation Option Code (Mirror object of 605C hex)	-6 to 0	---	-4	E	2 bytes (INT16)	---
	03	Halt Option Code (Mirror object of 605D hex)	1 to 3	---	1	E	2 bytes (INT16)	---
	04	Fault Reaction Option Code (Mirror object of 605E hex)	-7 to 0	---	-4	E	2 bytes (INT16)	---
3B21	---	Deceleration Stop	---	---	---	---	---	---
	01	Torque	1 to 5,000	0.1%	5,000	E	4 bytes (INT32)	---
3B30	---	Touch Probe 1	---	---	---	---	---	---
	01	Touch Probe 1 Source (Mirror object of 60D0-01 hex)	1 to 6	---	1	A	2 bytes (INT16)	---
	81	Status	---	---	---	---	4 bytes (INT32)	---
	83	Positive Edge Time Stamp	---	ns	---	---	8 bytes (U64)	TxPDO
	84	Touch Probe 1 Positive Edge (Mirror object of 60BA hex)	---	Command unit	---	---	4 bytes (INT32)	---
	F1	Setting	0000 0000 to FFFF FFFF hex	---	0	A	4 bytes (INT32)	---
3B31	---	Touch Probe 2	---	---	---	---	---	---
	01	Touch Probe 2 Source (Mirror object of 60D0-02 hex)	1 to 6	---	2	A	2 bytes (INT16)	---
	81	Status	---	---	---	---	4 bytes (INT32)	---
	83	Positive Edge Time Stamp	---	ns	---	---	8 bytes (U64)	TxPDO
	84	Touch Probe 2 Positive Edge (Mirror object of 60BC hex)	---	Command unit	---	---	4 bytes (INT32)	---
	F1	Setting	0000 0000 to FFFF FFFF hex	---	0	A	4 bytes (INT32)	---
3B40	---	Zone Notification 1	---	---	---	---	---	---
	01	Lower Limit	-2,147,483,648 to 2,147,483,647	Command unit	0	A	4 bytes (INT32)	---
	02	Upper Limit	-2,147,483,648 to 2,147,483,647	Command unit	0	A	4 bytes (INT32)	---
	81	Status	---	---	---	---	4 bytes (INT32)	---
3B41	---	Zone Notification 2	---	---	---	---	---	---
	01	Lower Limit	-2,147,483,648 to 2,147,483,647	Command unit	0	A	4 bytes (INT32)	---
	02	Upper Limit	-2,147,483,648 to 2,147,483,647	Command unit	0	A	4 bytes (INT32)	---
	81	Status	---	---	---	---	4 bytes (INT32)	---
3B50	---	Position Detection Func-tion	---	---	---	---	---	---

Index (hex)	Sub-index (hex)	Object name	Setting range	Unit	Default setting	Data attri-bute	Size	PDO map
3B50	05	Following Error Window (Mirror object of 6065 hex)	0 to 4,294,967,295	Command unit	10,500,000	A	4 bytes (U32)	---
3B51	---	Positioning Completion Notification	---	---	---	---	---	---
	01	Position Window (Mirror object of 6067 hex)	1 to 2,147,483,647	Command unit	1,000	A	4 bytes (U32)	---
	81	Status	---	---	---	---	4 bytes (INT32)	---
3B52	---	Positioning Completion Notification 2	---	---	---	---	---	---
	01	Position Window	1 to 2,147,483,647	Command unit	1,000	A	4 bytes (INT32)	---
	02	Notification Condition	0 to 1	---	1	A	4 bytes (INT32)	---
	81	Status	---	---	0	---	4 bytes (INT32)	---
3B60	---	Speed Detection Func-tion	---	---	---	---	---	---
	01	Velocity Attainment Detection Level	10 to 20,000	r/min	1,000	A	4 bytes (INT32)	---
	02	Zero Speed Detection Level	10 to 20,000	r/min	50	A	4 bytes (INT32)	---
	03	Velocity Conformity Detection Range	10 to 20,000	r/min	50	A	4 bytes (INT32)	---
	04	Excessive Speed Detec-tion Level	0 to 20,000	r/min	0	A	4 bytes (INT32)	---
	05	Excessive Velocity Devi-ation Detection Level	0 to 20,000	r/min	0	A	4 bytes (INT32)	---
	81	Status	---	---	---	---	4 bytes (INT32)	---
3B70	---	Vibration Detection	---	---	---	---	---	---
	01	Detection Level	0 to 500	%	500	A	4 bytes (INT32)	---
3B71	---	Runaway Detection	---	---	---	---	---	---
	01	Enable	0 to 1	---	1	R	4 bytes (INT32)	---
3B80	---	Load Characteristic Esti-mation	---	---	---	---	---	---
	01	Inertia Ratio Update Selection	0 to 1	---	1	A	4 bytes (INT32)	---
	02	Viscous Friction Com-pensation Update Selec-tion	0 to 1	---	0	A	4 bytes (INT32)	---
	03	Unbalanced Load Com-pensation Update Selec-tion	0 to 1	---	0	A	4 bytes (INT32)	---
	04	Dynamic Friction Com-pensation Update Selec-tion	0 to 1	---	0	A	4 bytes (INT32)	---
	05	Viscous Friction Tuning Coefficient	0 to 200	---	100	A	4 bytes (INT32)	---
	06	Estimation Sensitivity Selection	0 to 2	---	1	A	4 bytes (INT32)	---
	FF	Estimation Status	---	---	---	---	4 bytes (INT32)	---
4000	---	Error Full Code	---	---	---	---	---	---
	81	Error Full Code	---	---	---	---	4 bytes (INT32)	TxPDO
	82	Error Code (Mirror object of 603F hex)	---	---	---	---	2 bytes (U16)	---

Index (hex)	Sub-index (hex)	Object name	Setting range	Unit	Default setting	Data attri-bute	Size	PDO map
4020	---	Warning Customization	---	---	---	---	---	---
	01	Warning Mask 1 Selec-tion	---	---	0 hex	R	4 bytes (INT32)	---
	03	Warning Mask 3 Selec-tion	---	---	0 hex	R	4 bytes (INT32)	---
	04	Warning Hold Selection	0 to 7 hex	---	0 hex	R	4 bytes (INT32)	---
	05	Warning Level Change 1 Selection	---	---	0 hex	R	4 bytes (INT32)	---
	07	Warning Level Change 3 Selection	---	---	0 hex	R	4 bytes (INT32)	---
4021	---	Warning Output 1 Set-ting	---	---	---	---	---	---
	01	Selection 1	---	---	0	A	4 bytes (INT32)	---
	03	Selection 3	---	---	0	A	4 bytes (INT32)	---
4022	---	Warning Output 2 Set-ting	---	---	---	---	---	---
	01	Selection 1	---	---	0	A	4 bytes (INT32)	---
	03	Selection 3	---	---	0	A	4 bytes (INT32)	---
4030	---	Information Customiza-tion	---	---	---	---	---	---
	01	Information Level Change Selection	0000 0000 to FFFF FFFF hex	---	0	R	4 bytes (INT32)	---
4110	---	Monitor Data via PDO	---	---	---	---	---	---
	01	Target Object 1	0000 0000 to FFFF FFFF hex	---	0000 0000 hex	A	4 bytes (U32)	---
	02	Target Object 2	0000 0000 to FFFF FFFF hex	---	0000 0000 hex	A	4 bytes (U32)	---
	03	Target Object 3	0000 0000 to FFFF FFFF hex	---	0000 0000 hex	A	4 bytes (U32)	---
	04	Target Object 4	0000 0000 to FFFF FFFF hex	---	0000 0000 hex	A	4 bytes (U32)	---
	81	Monitor Data 1	---	---	---	---	4 bytes (INT32)	TxPDO
	82	Monitor Data 2	---	---	---	---	4 bytes (INT32)	TxPDO
	83	Monitor Data 3	---	---	---	---	4 bytes (INT32)	TxPDO
	84	Monitor Data 4	---	---	---	---	4 bytes (INT32)	TxPDO
4120	---	EtherCAT Communica-tions Error Count	---	---	---	---	---	---
	81	Error Count	---	---	---	---	4 bytes (INT32)	---
	F1	Error Count Clear	0 to 1	---	0	A	4 bytes (INT32)	---
4130	---	Safety Status Monitor	---	---	---	---	---	---
	81	Safety Status	---	---	---	---	4 bytes (U32)	TxPDO
	82	Mirror Safety control-word	---	---	---	---	2 bytes (U16)	TxPDO
	83	Mirror Safety statusword	---	---	---	---	2 bytes (U16)	TxPDO
	91	Safety Controlword 1st Byte (Mirror object of 6620-01 hex)	---	---	---	---	1 byte (U8)	---

Index (hex)	Sub-index (hex)	Object name	Setting range	Unit	Default setting	Data attri-bute	Size	PDO map
4130	92	Safety Controlword 2nd Byte (Mirror object of 6620-02 hex)	---	---	---	---	1 byte (U8)	---
	A1	Safety Statusword 1st Byte (Mirror object of 6621-01 hex)	---	---	---	---	1 byte (U8)	---
	A2	Safety Statusword 2nd Byte (Mirror object of 6621-02 hex)	---	---	---	---	1 byte (U8)	---
	B1	FSoE Address (Mirror object of F980-01 hex)	---	---	---	---	2 bytes (U16)	---
4131	---	Safety Command Moni-tor 1	---	---	---	---	---	---
	81	FSoE Slave CMD (Mirror object of E600-01 hex)	---	---	---	---	1 byte (U8)	---
	82	FSoE Slave Conn_ID (Mirror object of E600-02 hex)	---	---	---	---	2 bytes (U16)	---
	83	FSoE Slave CRC_0 (Mir-ror object of E600-03 hex)	---	---	---	---	2 bytes (U16)	---
	91	FSoE Master CMD (Mir-ror object of E700-01 hex)	---	---	---	---	1 byte (U8)	---
	92	FSoE Master Conn_ID (Mirror object of E700-02 hex)	---	---	---	---	2 bytes (U16)	---
	93	FSoE Master CRC_0 (Mirror object of E700-03 hex)	---	---	---	---	2 bytes (U16)	---
4132	---	Safety Command Moni-tor 2	---	---	---	---	---	---
	81	Safety Connection Sta-tus (Mirror object of E601-01 hex)	---	---	---	---	1 bit (BOOL)	---
	92	Error Acknowledge (Mir-ror object of 6632 hex)	---	---	---	---	1 bit (BOOL)	---
	A0	STO Command (Mirror object of 6640 hex)	---	---	---	---	1 bit (BOOL)	---
4140	---	Lifetime Information	---	---	---	---	---	---
	01	Safety relay lifetime warning detection threshold	0 to 10,000,000	Time	100,000	A	4 bytes (INT32)	---
	81	Total Power ON Time	---	min	---	---	4 bytes (INT32)	---
	82	Total Capacitor Operat-ing Time	---	min	---	---	4 bytes (INT32)	---
	83	Capacitor Operating Time Ratio	---	0.1%	---	---	4 bytes (INT32)	---
	84	Inrush Current Preven-tion Relay ON Count	---	Time	---	---	4 bytes (INT32)	---
	85	Dynamic Brake Relay ON Count	---	Time	---	---	4 bytes (INT32)	---
	86	Motor Operating Time	---	min	---	---	4 bytes (INT32)	---
	88	Safety Relay ON Count	---	Time	---	---	4 bytes (INT32)	---
	F1	Motor Operating Time Clear	---	---	---	A	4 bytes (INT32)	---
	F2	Clear	---	---	---	A	4 bytes (INT32)	---

Index (hex)	Sub-index (hex)	Object name	Setting range	Unit	Default setting	Data attri-bute	Size	PDO map
4140	F3	Safety Relay On Count Clear	---	---	---	A	4 bytes (INT32)	---
	FF	Clear Status	---	---	---	---	4 bytes (INT32)	---
4150	---	Overload	---	---	---	---	---	---
	01	Warning Notification Level	0 to 100	%	85	A	4 bytes (INT32)	---
	81	Load Ratio	---	%	---	---	4 bytes (INT32)	TxPDO
	82	Servo Drive Load Ratio	---	%	---	---	4 bytes (INT32)	---
	83	Motor Load Ratio	---	%	---	---	4 bytes (INT32)	---
4210	---	Display	---	---	---	---	---	---
	01	LED Display Selection	0 to 1	---	0	A	4 bytes (INT32)	---
4310	---	Regeneration	---	---	---	---	---	---
	01	External Regeneration Resistor Selection	0 to 1	---	0	R	4 bytes (INT32)	---
	02	External Regeneration Resistance	1 to 2,147,483,647	0.1 Ω	1	R	4 bytes (INT32)	---
	03	External Regeneration Allowable Power	1 to 2,147,483,647	W	1	R	4 bytes (INT32)	---
	04	External Regeneration Overload Ratio	0 to 100	%	85	R	4 bytes (INT32)	---
	81	Regeneration Load Ratio	---	%	---	---	4 bytes (INT32)	TxPDO
4320	---	Main Circuit Power Sup-ply	---	---	---	---	---	---
	01	Momentary Hold Time	1 to 2,000	ms	15	R	4 bytes (INT32)	---
	02	Phase Loss Detection Enable	0 to 1	---	1	R	4 bytes (INT32)	---
	03	Capacitor Discharge Enable	0 to 1	---	1	R	4 bytes (INT32)	---
	81	P-N Voltage	---	V	---	---	4 bytes (INT32)	---
	82	Servo Drive Temperature	---	°C	---	---	4 bytes (INT32)	---
4410	---	Motor Identity	---	---	---	---	---	---
	81	Motor Model	---	---	---	---	20 bytes (VS)	---
	82	Serial Number	---	---	---	---	16 bytes (VS)	---
	83	Last Connected Motor Model	---	---	---	---	20 bytes (VS)	---
	84	Last Connected Serial Number	---	---	---	---	16 bytes (VS)	---
	90	Motor Type (Mirror object of 6402 hex)	---	---	---	---	2 bytes (U16)	---
	92	Motor Manufacturer (Mir-ror object of 6404 hex)	---	---	---	---	20 bytes (VS)	---
	F1	Motor Setup	---	---	0	A	4 bytes (INT32)	---
	FF	Setup Status	---	---	---	---	4 bytes (INT32)	---
4510	---	Encoder	---	---	---	---	---	---
	01	Operation Selection when Using Absolute Encoder	0 to 2	---	2	R	4 bytes (INT32)	---

Index (hex)	Sub-index (hex)	Object name	Setting range	Unit	Default setting	Data attri-bute	Size	PDO map
4510	02	Absolute Encoder Counter Overflow Warn-ing Level	0 to 32,767	rotation	1,500	A	4 bytes (INT32)	---
	81	Serial Number	---	---	---	---	16 bytes (VS)	---
	82	Resolution per Rotation	---	---	---	---	4 bytes (INT32)	---
	84	One-rotation Data	---	Encoder unit	---	---	4 bytes (INT32)	---
	85	Multi-rotation Data	---	rotation	---	---	4 bytes (INT32)	---
	86	Encoder Communica-tions Error Count	---	---	---	---	4 bytes (INT32)	---
	87	Electric Angle	---	°	---	---	4 bytes (INT32)	---
	88	Mechanical Angle	---	°	---	---	4 bytes (INT32)	---
	89	Encoder Temperature	---	°C	---	---	4 bytes (INT32)	---
	F1	Absolute Encoder Setup	---	---	---	A	4 bytes (U32)	---
	F2	Encoder Communica-tions Error Count Clear	---	---	---	A	4 bytes (U32)	---
	FF	Clear Status	---	---	---	---	4 bytes (U32)	---
4600	---	I/O Monitor	---	---	---	---	---	---
	81	Physical I/O	---	---	---	---	4 bytes (U32)	TxPDO
	82	Safety IO power supply	---	---	---	---	4 bytes (U32)	TxPDO
4601	---	Function Input	---	---	---	---	---	---
	81	Monitor Input	---	---	---	---	4 bytes (INT32)	TxPDO
	82	Digital Inputs (Mirror object of 60FD hex)	---	---	---	---	4 bytes (U32)	TxPDO
4602	---	Function Output	---	---	---	---	---	---
	01	Bit Mask	0000 0000 to FFFF FFFF hex	---	0000 0000 hex	A	4 bytes (U32)	---
	F1	Physical Outputs	0000 0000 to FFFF FFFF hex	---	0000 0001 hex	A	4 bytes (U32)	---
4604	---	Control Input Change Count	---	---	---	---	---	---
	81	General Input 1	---	---	0	---	4 bytes (INT32)	---
	82	General Input 2	---	---	0	---	4 bytes (INT32)	---
	83	General Input 3	---	---	0	---	4 bytes (INT32)	---
	84	General Input 4	---	---	0	---	4 bytes (INT32)	---
	85	General Input 5	---	---	0	---	4 bytes (INT32)	---
	86	General Input 6	---	---	0	---	4 bytes (INT32)	---
	87	General Input 7	---	---	0	---	4 bytes (INT32)	---
	88	General Input 8	---	---	0	---	4 bytes (INT32)	---
	F1	Count Clear	0 to 1	---	0	A	4 bytes (INT32)	---

Index (hex)	Sub-index (hex)	Object name	Setting range	Unit	Default setting	Data attri-bute	Size	PDO map
4604	FF	Count Clear Execution Status	---	---	---	---	4 bytes (INT32)	---
4605	---	Control Output Change Count	---	---	---	---	---	---
	81	Error Output	---	---	---	---	4 bytes (U32)	---
	82	General Output 1	---	---	0	---	4 bytes (INT32)	---
	83	General Output 2	---	---	0	---	4 bytes (INT32)	---
	84	General Output 3	---	---	0	---	4 bytes (INT32)	---
	F1	Count Clear	0 to 1	---	0	A	4 bytes (INT32)	---
	FF	Count Clear Execution Status	---	---	---	---	4 bytes (INT32)	---
4610	---	Brake Interlock Output	---	---	---	---	---	---
	01	Enable	0 to 1	---	1	R	4 bytes (INT32)	---
	02	Timeout at Servo OFF	0 to 10,000	ms	500	E	4 bytes (INT32)	---
	03	Threshold Speed at Servo OFF	30 to 3,000	r/min	30	E	4 bytes (INT32)	---
	04	Hardware Delay Time	0 to 10,000	ms	0	E	4 bytes (INT32)	---
4620	---	Encoder Dividing Pulse Output	---	---	---	---	---	---
	01	Enable	0 to 1	---	0	R	4 bytes (INT32)	---
	02	Dividing Numerator	0 to 2,097,152	---	2,500	R	4 bytes (INT32)	---
	03	Dividing Denominator	0 to 2,097,152	---	0	R	4 bytes (INT32)	---
	04	Output Reverse Selec-tion	0 to 1	---	0	R	4 bytes (INT32)	---
4630	---	Positive Drive Prohibition Input	---	---	---	---	---	---
	01	Port Selection	0 to 8	---	2	R	4 bytes (INT32)	---
	02	Logic Selection	0 to 1	---	1	R	4 bytes (INT32)	---
	81	Signal Status	---	---	---	---	4 bytes (INT32)	---
4631	---	Negative Drive Prohibi-tion Input	---	---	---	---	---	---
	01	Port Selection	0 to 8	---	3	R	4 bytes (INT32)	---
	02	Logic Selection	0 to 1	---	1	R	4 bytes (INT32)	---
	81	Signal Status	---	---	---	---	4 bytes (INT32)	---
4632	---	External Latch Input 1	---	---	---	---	---	---
	01	Port Selection	0 to 8	---	7	R	4 bytes (INT32)	---
	02	Logic Selection	0 to 1	---	0	R	4 bytes (INT32)	---
	81	Signal Status	---	---	---	---	4 bytes (INT32)	---
4633	---	External Latch Input 2	---	---	---	---	---	---
	01	Port Selection	0 to 8	---	8	R	4 bytes (INT32)	---

Index (hex)	Sub-index (hex)	Object name	Setting range	Unit	Default setting	Data attri-bute	Size	PDO map
4633	02	Logic Selection	0 to 1	---	0	R	4 bytes (INT32)	---
	81	Signal Status	---	---	---	---	4 bytes (INT32)	---
4634	---	Home Proximity Input	---	---	---	---	---	---
	01	Port Selection	0 to 8	---	4	R	4 bytes (INT32)	---
	02	Logic Selection	0 to 1	---	0	R	4 bytes (INT32)	---
	81	Signal Status	---	---	---	---	4 bytes (INT32)	---
4635	---	Positive Torque Limit Input	---	---	---	---	---	---
	01	Port Selection	0 to 8	---	0	R	4 bytes (INT32)	---
	02	Logic Selection	0 to 1	---	0	R	4 bytes (INT32)	---
	81	Signal Status	---	---	---	---	4 bytes (INT32)	---
4636	---	Negative Torque Limit Input	---	---	---	---	---	---
	01	Port Selection	0 to 8	---	0	R	4 bytes (INT32)	---
	02	Logic Selection	0 to 1	---	0	R	4 bytes (INT32)	---
	81	Signal Status	---	---	---	---	4 bytes (INT32)	---
4637	---	Error Stop Input	---	---	---	---	---	---
	01	Port Selection	0 to 8	---	1	R	4 bytes (INT32)	---
	02	Logic Selection	0 to 1	---	1	R	4 bytes (INT32)	---
	81	Signal Status	---	---	---	---	4 bytes (INT32)	---
4638	---	Monitor Input 1	---	---	---	---	---	---
	01	Port Selection	0 to 8	---	5	R	4 bytes (INT32)	---
	02	Logic Selection	0 to 1	---	0	R	4 bytes (INT32)	---
	81	Signal Status	---	---	---	---	4 bytes (INT32)	---
4639	---	Monitor Input 2	---	---	---	---	---	---
	01	Port Selection	0 to 8	---	6	R	4 bytes (INT32)	---
	02	Logic Selection	0 to 1	---	0	R	4 bytes (INT32)	---
	81	Signal Status	---	---	---	---	4 bytes (INT32)	---
463A	---	Monitor Input 3	---	---	---	---	---	---
	01	Port Selection	0 to 8	---	0	R	4 bytes (INT32)	---
	02	Logic Selection	0 to 1	---	0	R	4 bytes (INT32)	---
	81	Signal Status	---	---	---	---	4 bytes (INT32)	---
463B	---	Monitor Input 4	---	---	---	---	---	---
	01	Port Selection	0 to 8	---	0	R	4 bytes (INT32)	---
	02	Logic Selection	0 to 1	---	0	R	4 bytes (INT32)	---

Index (hex)	Sub-index (hex)	Object name	Setting range	Unit	Default setting	Data attri-bute	Size	PDO map
463B	81	Signal Status	---	---	---	---	4 bytes (INT32)	---
463C	---	Monitor Input 5	---	---	---	---	---	---
	01	Port Selection	0 to 8	---	0	R	4 bytes (INT32)	---
	02	Logic Selection	0 to 1	---	0	R	4 bytes (INT32)	---
	81	Signal Status	---	---	---	---	4 bytes (INT32)	---
463D	---	Monitor Input 6	---	---	---	---	---	---
	01	Port Selection	0 to 8	---	0	R	4 bytes (INT32)	---
	02	Logic Selection	0 to 1	---	0	R	4 bytes (INT32)	---
	81	Signal Status	---	---	---	---	4 bytes (INT32)	---
463E	---	Monitor Input 7	---	---	---	---	---	---
	01	Port Selection	0 to 8	---	0	R	4 bytes (INT32)	---
	02	Logic Selection	0 to 1	---	0	R	4 bytes (INT32)	---
	81	Signal Status	---	---	---	---	4 bytes (INT32)	---
463F	---	Monitor Input 8	---	---	---	---	---	---
	01	Port Selection	0 to 8	---	0	R	4 bytes (INT32)	---
	02	Logic Selection	0 to 1	---	0	R	4 bytes (INT32)	---
	81	Signal Status	---	---	---	---	4 bytes (INT32)	---
4650	---	Error Output	---	---	---	---	---	---
	01	Port Selection	0 to 7 hex	---	0 hex	R	4 bytes (INT32)	---
	02	Logic Selection	1	---	1	R	4 bytes (INT32)	---
	81	Signal Status	---	---	---	---	4 bytes (INT32)	---
4651	---	Servo Ready Output	---	---	---	---	---	---
	01	Port Selection	0 to 7 hex	---	1 hex	R	4 bytes (INT32)	---
	02	Logic Selection	0 to 1	---	0	R	4 bytes (INT32)	---
	81	Signal Status	---	---	---	---	4 bytes (INT32)	---
4652	---	Positioning Completion Output 1	---	---	---	---	---	---
	01	Port Selection	0 to 7 hex	---	0 hex	R	4 bytes (INT32)	---
	02	Logic Selection	0 to 1	---	0	R	4 bytes (INT32)	---
	81	Signal Status	---	---	---	---	4 bytes (INT32)	---
4653	---	Positioning Completion Output 2	---	---	---	---	---	---
	01	Port Selection	0 to 7 hex	---	0 hex	R	4 bytes (INT32)	---
	02	Logic Selection	0 to 1	---	0	R	4 bytes (INT32)	---
	81	Signal Status	---	---	---	---	4 bytes (INT32)	---

Index (hex)	Sub-index (hex)	Object name	Setting range	Unit	Default setting	Data attri-bute	Size	PDO map
4654	---	Velocity Attainment Detection Output	---	---	---	---	---	---
	01	Port Selection	0 to 7 hex	---	0 hex	R	4 bytes (INT32)	---
	02	Logic Selection	0 to 1	---	0	R	4 bytes (INT32)	---
	81	Signal Status	---	---	---	---	4 bytes (INT32)	---
4655	---	Torque Limit Output	---	---	---	---	---	---
	01	Port Selection	0 to 7 hex	---	0 hex	R	4 bytes (INT32)	---
	02	Logic Selection	0 to 1	---	0	R	4 bytes (INT32)	---
	81	Signal Status	---	---	---	---	4 bytes (INT32)	---
4656	---	Zero Speed Detection Output	---	---	---	---	---	---
	01	Port Selection	0 to 7 hex	---	0 hex	R	4 bytes (INT32)	---
	02	Logic Selection	0 to 1	---	0	R	4 bytes (INT32)	---
	81	Signal Status	---	---	---	---	4 bytes (INT32)	---
4657	---	Velocity Conformity Out-put	---	---	---	---	---	---
	01	Port Selection	0 to 7 hex	---	0 hex	R	4 bytes (INT32)	---
	02	Logic Selection	0 to 1	---	0	R	4 bytes (INT32)	---
	81	Signal Status	---	---	---	---	4 bytes (INT32)	---
4658	---	Warning Output 1	---	---	---	---	---	---
	01	Port Selection	0 to 7 hex	---	0 hex	R	4 bytes (INT32)	---
	02	Logic Selection	0 to 1	---	0	R	4 bytes (INT32)	---
	81	Signal Status	---	---	---	---	4 bytes (INT32)	---
4659	---	Warning Output 2	---	---	---	---	---	---
	01	Port Selection	0 to 7 hex	---	0 hex	R	4 bytes (INT32)	---
	02	Logic Selection	0 to 1	---	0	R	4 bytes (INT32)	---
	81	Signal Status	---	---	---	---	4 bytes (INT32)	---
465A	---	Velocity Limiting Output	---	---	---	---	---	---
	01	Port Selection	0 to 7 hex	---	0 hex	R	4 bytes (INT32)	---
	02	Logic Selection	0 to 1	---	0	R	4 bytes (INT32)	---
	81	Signal Status	---	---	---	---	4 bytes (INT32)	---
465B	---	Error Clear Attribute Out-put	---	---	---	---	---	---
	01	Port Selection	0 to 7 hex	---	0 hex	R	4 bytes (INT32)	---
	02	Logic Selection	0 to 1	---	0	R	4 bytes (INT32)	---
	81	Signal Status	---	---	---	---	4 bytes (INT32)	---

Index (hex)	Sub-index (hex)	Object name	Setting range	Unit	Default setting	Data attri-bute	Size	PDO map
465C	---	Remote Output 1	---	---	---	---	---	---
	01	Port Selection	0 to 7 hex	---	2 hex	R	4 bytes (INT32)	---
	02	Logic Selection	0 to 1	---	0	R	4 bytes (INT32)	---
	81	Signal Status	---	---	---	---	4 bytes (INT32)	---
465D	---	Remote Output 2	---	---	---	---	---	---
	01	Port Selection	0 to 7 hex	---	4 hex	R	4 bytes (INT32)	---
	02	Logic Selection	0 to 1	---	0	R	4 bytes (INT32)	---
	81	Signal Status	---	---	---	---	4 bytes (INT32)	---
465E	---	Remote Output 3	---	---	---	---	---	---
	01	Port Selection	0 to 7 hex	---	0 hex	R	4 bytes (INT32)	---
	02	Logic Selection	0 to 1	---	0	R	4 bytes (INT32)	---
	81	Signal Status	---	---	---	---	4 bytes (INT32)	---
465F	---	Zone Notification Output 1	---	---	---	---	---	---
	01	Port Selection	0 to 7 hex	---	0 hex	R	4 bytes (INT32)	---
	02	Logic Selection	0 to 1	---	0	R	4 bytes (INT32)	---
	81	Signal Status	---	---	---	---	4 bytes (INT32)	---
4660	---	Zone Notification Output 2	---	---	---	---	---	---
	01	Port Selection	0 to 7 hex	---	0 hex	R	4 bytes (INT32)	---
	02	Logic Selection	0 to 1	---	0	R	4 bytes (INT32)	---
	81	Signal Status	---	---	---	---	4 bytes (INT32)	---
4661	---	Position Command Sta-tus Output	---	---	---	---	---	---
	01	Port Selection	0 to 7 hex	---	0 hex	R	4 bytes (INT32)	---
	02	Logic Selection	0 to 1	---	0	R	4 bytes (INT32)	---
	81	Signal Status	---	---	---	---	4 bytes (INT32)	---
4662	---	Distribution Completed Output	---	---	---	---	---	---
	01	Port Selection	0 to 7 hex	---	0 hex	R	4 bytes (INT32)	---
	02	Logic Selection	0 to 1	---	0	R	4 bytes (INT32)	---
	81	Signal Status	---	---	---	---	4 bytes (INT32)	---
4663	---	External Brake Interlock Output	---	---	---	---	---	---
	01	Port Selection	00000000 to FFFFFFFF hex	---	0 hex	R	4 bytes (INT32)	---
	02	Logic Selection	0	---	0	R	4 bytes (INT32)	---
	81	Signal Status	---	---	---	---	4 bytes (INT32)	---

Index (hex)	Sub-index (hex)	Object name	Setting range	Unit	Default setting	Data attri-bute	Size	PDO map
4F00	---	Safety Origin Position Setting	---	---	---	---	---	---
	01	Safety Origin Position Determination Method	0 to 2	---	0	S	1 byte (U8)	---
	02	Test Pulse Diagnosis	0 to 3	---	3	S	1 byte (U8)	---
	03	SOPT input terminal set-ting	---	---	3	S	1 byte (U8)	---
	04	Safety Origin Position Offset	0 to 1,048,575	Encoder unit	0	S	4 bytes (U32)	---
	05	Discrepancy Distance	-1 to 2,147,483,647	Encoder unit	-1	S	4 bytes (U32)	---
	06	Safety Origin Position Tolerance	128 to 2,147,483,647	Encoder unit	10,484	S	4 bytes (U32)	---
4F01	---	Safety Position/Velocity Validation Monitoring Function	---	---	---	---	---	---
	01	Function Enable	0 to 1	---	1	S	1 byte (U8)	---
	02	Position Tolerance	128 to 131,072	Encoder unit	58,254	S	4 bytes (U32)	---
	03	Velocity Tolerance	4 to 250	r/min	50	S	4 bytes (U32)	---
4F02	---	Discrepancy Distance Measurement	---	---	---	---	---	---
	81	Status	---	---	---	R	4 bytes (INT32)	---
	82	Discrepancy Distance Monitor	---	Encoder unit	---	R	4 bytes (U32)	---
	83	SOPT Intermediate Posi-tion Determination Sta-tus	---	---	---	R	4 bytes (INT32)	---
	F1	Re-measurement of Dis-crepancy Distance Moni-toring	0 to 1	---	---	W	4 bytes (U32)	---
	FF	Execution Status	---	---	---	R	4 bytes (INT32)	
4F03	00	Safety Motor Rotation Direction Selection	0 to 1	---	1	S	4 bytes (INT32)	---
4F08	00	Safety Relay Activate	0 to 1	---	0	S	4 bytes (INT32)	---
4F09	00	Safety Relay OFF Delay Time 1	0 to 1,000	ms	30	S	2 bytes (U16)	---
4F0A	00	Safety Relay OFF Delay Time 2	0 to 1,000	ms	30	S	2 bytes (U16)	---
4F16	---	Error Detection Activate In SLS Deactivate	---	---	---	---	---	---
	01	Error Detection Activate In SLS Deactivate (SLS 1)	0 to 1	---	1	S	4 bytes (INT32)	---
	02	Error Detection Activate In SLS Deactivate (SLS 2)	0 to 1	---	1	S	4 bytes (INT32)	---
	03	Error Detection Activate In SLS Deactivate (SLS 3)	0 to 1	---	1	S	4 bytes (INT32)	---
	04	Error Detection Activate In SLS Deactivate (SLS 4)	0 to 1	---	1	S	4 bytes (INT32)	---
	05	Error Detection Activate In SLS Deactivate (SLS 5)	0 to 1	---	1	S	4 bytes (INT32)	---

Index (hex)	Sub-index (hex)	Object name	Setting range	Unit	Default setting	Data attri-bute	Size	PDO map
4F16	06	Error Detection Activate In SLS Deactivate (SLS 6)	0 to 1	---	1	S	4 bytes (INT32)	---
	07	Error Detection Activate In SLS Deactivate (SLS 7)	0 to 1	---	1	S	4 bytes (INT32)	---
	08	Error Detection Activate In SLS Deactivate (SLS 8)	0 to 1	---	1	S	4 bytes (INT32)	---
4F18	00	Safety Present Pulse Position	---	Encoder unit	0	---	4 bytes (INT32)	TxPDO
4F19	00	Safety Present Position	---	Encoder unit	0	---	4 bytes (INT32)	TxPDO
4F1A	00	Safety Present Motor Velocity	---	0.1 r/min	0	---	4 bytes (INT32)	TxPDO
4F20	---	Safety Function Disable Setting	---	---	---	---	---	---
	01	1st Byte Disable Setting	0 to 110	---	0	S	2 bytes (U16)	---
603F	00	Error code	---	---	0000 hex	---	2 bytes (U16)	TxPDO
6040	00	Controlword	0000 to FFFF hex	---	0000 hex	A	2 bytes (U16)	RxPDO
6041	00	Statusword	---	---	0000 hex	---	2 bytes (U16)	TxPDO
605B	00	Shutdown option code	-7 to 0	---	-5	E	2 bytes (INT16)	---
605C	00	Disable operation option code	-6 to 0	---	-4	E	2 bytes (INT16)	---
605D	00	Halt option code	1 to 3	---	1	E	2 bytes (INT16)	---
605E	00	Fault reaction option code	-7 to 0	---	-4	E	2 bytes (INT16)	---
6060	00	Modes of operation	0 to 10	---	0	A	1 byte (INT8)	RxPDO
6061	00	Modes of operation dis-play	---	---	---	---	1 byte (INT8)	TxPDO
6062	00	Position demand value	---	Command unit	---	---	4 bytes (INT32)	TxPDO
6063	00	Position actual internal value	---	Encoder unit	---	---	4 bytes (INT32)	TxPDO
6064	00	Position actual value	---	Command unit	---	---	4 bytes (INT32)	TxPDO
6065	00	Following error window	0 to 4,294,967,295	Command unit	10,500,000	A	4 bytes (INT32)	---
6067	00	Position window	1 to 2,147,483,647	Command unit	1,000	A	4 bytes (U32)	---
606B	00	Velocity demand value	---	Command unit/s	---	---	4 bytes (INT32)	TxPDO
606C	00	Velocity actual value	---	Command unit/s	---	---	4 bytes (INT32)	TxPDO
6071	00	Target torque	-5,000 to 5,000	0.1%	0	A	2 bytes (INT16)	RxPDO
6072	00	Max torque	0 to 5,000	0.1%	5,000	A	2 bytes (U16)	RxPDO
6074	00	Torque demand	---	0.1%	---	---	2 bytes (INT16)	TxPDO
6077	00	Torque actual value	---	0.1%	---	---	2 bytes (INT16)	TxPDO
607A	00	Target position	-2,147,483,648 to 2,147,483,647	Command unit	0	A	4 bytes (INT32)	RxPDO

Index (hex)	Sub-index (hex)	Object name	Setting range	Unit	Default setting	Data attri-bute	Size	PDO map
607C	00	Home offset	-2,147,483,648 to 2,147,483,647	Command unit	0	R	4 bytes (INT32)	---
607D	---	Software position limit	---	---	---	---	---	---
	01	Min position limit	-2,147,483,648 to 2,147,483,647	Command unit	-62,500	E	4 bytes (INT32)	---
	02	Max position limit	-2,147,483,648 to 2,147,483,647	Command unit	62,500	E	4 bytes (INT32)	---
607F	00	Max profile velocity	0 to 2,147,483,647	Command unit/s	2,147,483,647	A	4 bytes (U32)	RxPDO
6081	00	Profile velocity	0 to 2,147,483,647	Command unit/s	0	A	4 bytes (U32)	RxPDO
6083	00	Profile acceleration	1 to 2,147,483,647	Command unit/s^2	125,000	A	4 bytes (U32)	RxPDO
6084	00	Profile deceleration	1 to 2,147,483,647	Command unit/s^2	125,000	A	4 bytes (U32)	RxPDO
6091	---	Gear ratio	---	---	---	---	---	---
	01	Motor revolutions	0 to 1,073,741,824	---	1	R	4 bytes (U32)	---
	02	Shaft revolutions	1 to 1,073,741,824	---	1	R	4 bytes (U32)	---
6098	00	Homing method	0 to 37	---	0	A	1 byte (INT8)	---
6099	---	Homing speeds	---	---	---	---	---	---
	01	Speed during search for switch	1 to 2,147,483,647	Command unit/s	625	A	4 bytes (U32)	---
	02	Speed during search for zero	1 to 2,147,483,647	Command unit/s	625	A	4 bytes (U32)	---
609A	00	Homing acceleration	1 to 2,147,483,647	Command unit/s^2	125,000	A	4 bytes (U32)	---
60B0	00	Position offset	-2,147,483,648 to 2,147,483,647	Command unit	0	A	4 bytes (INT32)	RxPDO
60B1	00	Velocity offset	-2,147,483,648 to 2,147,483,647	Command unit/s	0	A	4 bytes (INT32)	RxPDO
60B2	00	Torque offset	-5,000 to 5,000	0.1%	0	A	2 bytes (INT16)	RxPDO
60B8	00	Touch probe function	0 to 65,535	---	0	A	2 bytes (U16)	RxPDO
60B9	00	Touch probe status	---	---	---	---	2 bytes (U16)	TxPDO
60BA	00	Touch probe 1 positive edge	---	Command unit	---	---	4 bytes (INT32)	TxPDO
60BC	00	Touch probe 2 positive edge	---	Command unit	---	---	4 bytes (INT32)	TxPDO
60C2	---	Interpolation time period	---	---	---	---	---	---
	01	Interpolation time period value	0 to 255	---	1	E	1 byte (U8)	---
	02	Interpolation time index	-128 to 63	---	-3	E	1 byte (INT8)	---
60D0	---	Touch probe source	---	---	---	---	---	---
	01	Touch probe 1 source	1 to 6	---	1	A	2 bytes (INT16)	---
	02	Touch probe 2 source	1 to 6	---	2	A	2 bytes (INT16)	---
60D9	00	Supported functions	---	---	00000001 hex	---	4 bytes (U32)	---

Index (hex)	Sub-index (hex)	Object name	Setting range	Unit	Default setting	Data attri-bute	Size	PDO map
60DA	00	Function Settings	00000000 to FFFFFFFF hex	---	00000001 hex	A	4 bytes (U32)	---
60E0	00	Positive torque limit value	0 to 5,000	0.1%	5,000	A	2 bytes (U16)	RxPDO
60E1	00	Negative torque limit value	0 to 5,000	0.1%	5,000	A	2 bytes (U16)	RxPDO
60E3	---	Supported homing meth-ods	---	---	---	---	---	---
	01	1st supported homing method	---	---	8	---	2 bytes (INT16)	---
	02	2nd supported homing method	---	---	12	---	2 bytes (INT16)	---
	03	3rd supported homing method	---	---	19	---	2 bytes (INT16)	---
	04	4th supported homing method	---	---	20	---	2 bytes (INT16)	---
	05	5th supported homing method	---	---	33	---	2 bytes (INT16)	---
	06	6th supported homing method	---	---	34	---	2 bytes (INT16)	---
	07	7th supported homing method	---	---	37	---	2 bytes (INT16)	---
60F4	00	Following error actual value	---	Command unit	---	---	4 bytes (INT32)	TxPDO
60FA	00	Control effort	---	Command unit/s	---	---	4 bytes (INT32)	TxPDO
60FC	00	Position demand inter-nal value	---	Encoder unit	---	---	4 bytes (INT32)	TxPDO
60FD	00	Digital inputs	---	---	---	---	4 bytes (U32)	TxPDO
60FE	---	Digital outputs	---	---	---	---	---	---
	01	Physical outputs	---	---	00000001 hex	A	4 bytes (U32)	RxPDO
	02	Bit mask	---	---	00000000 hex	A	4 bytes (U32)	---
60FF	00	Target velocity	-2,147,483,648 to 2,147,483,647	Command unit/s	0	A	4 bytes (INT32)	RxPDO
6402	00	Motor Type	---	---	3	---	2 bytes (U16)	---
6404	00	Motor manufacturer	---	---	OMRON	---	20 bytes (VS)	---
6502	00	Supported drive modes	---	---	000003A5 hex	---	4 bytes (U32)	---
6620	---	safety controlword	---	---	---	---	---	---
	01	safety controlword 1st Byte	---	---	---	---	1 byte (U8)	---
	02	safety controlword 2nd Byte	---	---	---	---	1 byte (U8)	---
6621	---	safety statusword	---	---	---	---	---	---
	01	safety statusword 1st Byte	---	---	---	---	1 byte (U8)	---
	02	safety statusword 2nd Byte	---	---	---	---	1 byte (U8)	---
6632	00	error acknowledge	0 to 1	---	---	A	1 bit (BOOL)	RxPDO, TxPDO
6640	00	STO command	0 to 1	---	0	A	1 bit (BOOL)	RxPDO, TxPDO
6643	---	STO activate SBC	---	---	---	---	---	---
	01	STO activate SBC1	00000000 to 66600101 hex	---	00000000 hex	S	4 bytes (U32)	---

Index (hex)	Sub-index (hex)	Object name	Setting range	Unit	Default setting	Data attri-bute	Size	PDO map
6650	---	SS1 command	---	---	---	---	---	---
	01	SS1 command1	0 to 1	---	---	A	1 bit (BOOL)	RxPDO, TxPDO
	02	SS1 command2	0 to 1	---	---	A	1 bit (BOOL)	RxPDO, TxPDO
	03	SS1 command3	0 to 1	---	---	A	1 bit (BOOL)	RxPDO, TxPDO
	04	SS1 command4	0 to 1	---	---	A	1 bit (BOOL)	RxPDO, TxPDO
	05	SS1 command5	0 to 1	---	---	A	1 bit (BOOL)	RxPDO, TxPDO
	06	SS1 command6	0 to 1	---	---	A	1 bit (BOOL)	RxPDO, TxPDO
	07	SS1 command7	0 to 1	---	---	A	1 bit (BOOL)	RxPDO, TxPDO
	08	SS1 command8	0 to 1	---	---	A	1 bit (BOOL)	RxPDO, TxPDO
6651	---	SS1 time to STO	---	---	---	---	---	---
	01	SS1 time to STO1	---	ms	0	S	2 bytes (U16)	---
	02	SS1 time to STO2	---	ms	0	S	2 bytes (U16)	---
	03	SS1 time to STO3	---	ms	0	S	2 bytes (U16)	---
	04	SS1 time to STO4	---	ms	0	S	2 bytes (U16)	---
	05	SS1 time to STO5	---	ms	0	S	2 bytes (U16)	---
	06	SS1 time to STO6	---	ms	0	S	2 bytes (U16)	---
	07	SS1 time to STO7	---	ms	0	S	2 bytes (U16)	---
	08	SS1 time to STO8	---	ms	0	S	2 bytes (U16)	---
6653	---	SS1 velocity zero win-dow u32	---	---	---	---	---	---
	01	SS1 velocity zero win-dow1	10 to 20,000	r/min	50	S	4 bytes (U32)	---
	02	SS1 velocity zero win-dow2	10 to 20,000	r/min	50	S	4 bytes (U32)	---
	03	SS1 velocity zero win-dow3	10 to 20,000	r/min	50	S	4 bytes (U32)	---
	04	SS1 velocity zero win-dow4	10 to 20,000	r/min	50	S	4 bytes (U32)	---
	05	SS1 velocity zero win-dow5	10 to 20,000	r/min	50	S	4 bytes (U32)	---
	06	SS1 velocity zero win-dow6	10 to 20,000	r/min	50	S	4 bytes (U32)	---
	07	SS1 velocity zero win-dow7	10 to 20,000	r/min	50	S	4 bytes (U32)	---
	08	SS1 velocity zero win-dow8	10 to 20,000	r/min	50	S	4 bytes (U32)	---
6654	---	SS1 time for velocity zero	---	---	---	---	---	---
	01	SS1 time for velocity zero 1	---	ms	0	S	2 bytes (U16)	---
	02	SS1 time for velocity zero 2	---	ms	0	S	2 bytes (U16)	---
	03	SS1 time for velocity zero 3	---	ms	0	S	2 bytes (U16)	---

Index (hex)	Sub-index (hex)	Object name	Setting range	Unit	Default setting	Data attri-bute	Size	PDO map
6654	04	SS1 time for velocity zero 4	---	ms	0	S	2 bytes (U16)	---
	05	SS1 time for velocity zero 5	---	ms	0	S	2 bytes (U16)	---
	06	SS1 time for velocity zero 6	---	ms	0	S	2 bytes (U16)	---
	07	SS1 time for velocity zero 7	---	ms	0	S	2 bytes (U16)	---
	08	SS1 time for velocity zero 8	---	ms	0	S	2 bytes (U16)	---
6658	---	SS1 activate SBC	---	---	---	---	---	---
	01	SS1 activate SBC 1	00000000 to 66600101 hex	---	00000000 hex	S	4 bytes (U32)	---
	02	SS1 activate SBC 2	00000000 to 66600101 hex	---	00000000 hex	S	4 bytes (U32)	---
	03	SS1 activate SBC 3	00000000 to 66600101 hex	---	00000000 hex	S	4 bytes (U32)	---
	04	SS1 activate SBC 4	00000000 to 66600101 hex	---	00000000 hex	S	4 bytes (U32)	---
	05	SS1 activate SBC 5	00000000 to 66600101 hex	---	00000000 hex	S	4 bytes (U32)	---
	06	SS1 activate SBC 6	00000000 to 66600101 hex	---	00000000 hex	S	4 bytes (U32)	---
	07	SS1 activate SBC 7	00000000 to 66600101 hex	---	00000000 hex	S	4 bytes (U32)	---
	08	SS1 activate SBC 8	00000000 to 66600101 hex	---	00000000 hex	S	4 bytes (U32)	---
6660	---	SBC command	---	---	---	---	---	---
	01	SBC command1	0 to 1	---	---	A	1 bit (BOOL)	RxPDO, TxPDO
6661	---	SBC brake time delay	---	---	---	---	---	---
	01	SBC brake time delay	0 to 1,000	ms	200	S	2 bytes (U16)	---
6668	---	SOS command	---	---	---	---	---	---
	01	SOS command1	0 to 1	---	---	A	1 bit (BOOL)	RxPDO, TxPDO
	02	SOS command2	0 to 1	---	---	A	1 bit (BOOL)	RxPDO, TxPDO
	03	SOS command3	0 to 1	---	---	A	1 bit (BOOL)	RxPDO, TxPDO
	04	SOS command4	0 to 1	---	---	A	1 bit (BOOL)	RxPDO, TxPDO
	05	SOS command5	0 to 1	---	---	A	1 bit (BOOL)	RxPDO, TxPDO
	06	SOS command6	0 to 1	---	---	A	1 bit (BOOL)	RxPDO, TxPDO
	07	SOS command7	0 to 1	---	---	A	1 bit (BOOL)	RxPDO, TxPDO
	08	SOS command8	0 to 1	---	---	A	1 bit (BOOL)	RxPDO, TxPDO
666A	---	SOS position zero window	---	---	---	---	---	---
	01	SOS position zero window1	128 to 2,147,483,647	Encoder unit	131,072	S	4 bytes (U32)	---
	02	SOS position zero window2	128 to 2,147,483,647	Encoder unit	131,072	S	4 bytes (U32)	---
	03	SOS position zero window3	128 to 2,147,483,647	Encoder unit	131,072	S	4 bytes (U32)	---
	04	SOS position zero window4	128 to 2,147,483,647	Encoder unit	131,072	S	4 bytes (U32)	---

Index (hex)	Sub-index (hex)	Object name	Setting range	Unit	Default setting	Data attri-bute	Size	PDO map
666A	05	SOS position zero window5	128 to 2,147,483,647	Encoder unit	131,072	S	4 bytes (U32)	---
	06	SOS position zero window6	128 to 2,147,483,647	Encoder unit	131,072	S	4 bytes (U32)	---
	07	SOS position zero window7	128 to 2,147,483,647	Encoder unit	131,072	S	4 bytes (U32)	---
	08	SOS position zero window8	128 to 2,147,483,647	Encoder unit	131,072	S	4 bytes (U32)	---
666C	---	SOS velocity zero window	---	---	---	---	---	---
	01	SOS velocity zero window1	10 to 20,000	r/min	50	S	4 bytes (U32)	---
	02	SOS velocity zero window2	10 to 20,000	r/min	50	S	4 bytes (U32)	---
	03	SOS velocity zero window3	10 to 20,000	r/min	50	S	4 bytes (U32)	---
	04	SOS velocity zero window4	10 to 20,000	r/min	50	S	4 bytes (U32)	---
	05	SOS velocity zero window5	10 to 20,000	r/min	50	S	4 bytes (U32)	---
	06	SOS velocity zero window6	10 to 20,000	r/min	50	S	4 bytes (U32)	---
	07	SOS velocity zero window7	10 to 20,000	r/min	50	S	4 bytes (U32)	---
	08	SOS velocity zero window8	10 to 20,000	r/min	50	S	4 bytes (U32)	---
6670	---	SS2 command	---	---	---	---	---	---
	01	SS2 command1	0 to 1	---	---	A	1 bit (BOOL)	RxPDO, TxPDO
	02	SS2 command2	0 to 1	---	---	A	1 bit (BOOL)	RxPDO, TxPDO
	03	SS2 command3	0 to 1	---	---	A	1 bit (BOOL)	RxPDO, TxPDO
	04	SS2 command4	0 to 1	---	---	A	1 bit (BOOL)	RxPDO, TxPDO
	05	SS2 command5	0 to 1	---	---	A	1 bit (BOOL)	RxPDO, TxPDO
	06	SS2 command6	0 to 1	---	---	A	1 bit (BOOL)	RxPDO, TxPDO
	07	SS2 command7	0 to 1	---	---	A	1 bit (BOOL)	RxPDO, TxPDO
	08	SS2 command8	0 to 1	---	---	A	1 bit (BOOL)	RxPDO, TxPDO
6671	---	SS2 time to SOS	---	---	---	---	---	---
	01	SS2 time to SOS 1	---	ms	0	S	2 bytes (U16)	---
	02	SS2 time to SOS 2	---	ms	0	S	2 bytes (U16)	---
	03	SS2 time to SOS 3	---	ms	0	S	2 bytes (U16)	---
	04	SS2 time to SOS 4	---	ms	0	S	2 bytes (U16)	---
	05	SS2 time to SOS 5	---	ms	0	S	2 bytes (U16)	---
	06	SS2 time to SOS 6	---	ms	0	S	2 bytes (U16)	---
	07	SS2 time to SOS 7	---	ms	0	S	2 bytes (U16)	---
	08	SS2 time to SOS 8	---	ms	0	S	2 bytes (U16)	---

Index (hex)	Sub-index (hex)	Object name	Setting range	Unit	Default setting	Data attri-bute	Size	PDO map
6672	---	SS2 time for velocity zero	---	---	---	---	---	---
	01	SS2 time for velocity zero 1	---	ms	0	S	2 bytes (U16)	---
	02	SS2 time for velocity zero 2	---	ms	0	S	2 bytes (U16)	---
	03	SS2 time for velocity zero 3	---	ms	0	S	2 bytes (U16)	---
	04	SS2 time for velocity zero 4	---	ms	0	S	2 bytes (U16)	---
	05	SS2 time for velocity zero 5	---	ms	0	S	2 bytes (U16)	---
	06	SS2 time for velocity zero 6	---	ms	0	S	2 bytes (U16)	---
	07	SS2 time for velocity zero 7	---	ms	0	S	2 bytes (U16)	---
	08	SS2 time for velocity zero 8	---	ms	0	S	2 bytes (U16)	---
6690	---	SLS command	---	---	---	---	---	---
	01	SLS command1	0 to 1	---	---	A	1 bit (BOOL)	RxPDO, TxPDO
	02	SLS command2	0 to 1	---	---	A	1 bit (BOOL)	RxPDO, TxPDO
	03	SLS command3	0 to 1	---	---	A	1 bit (BOOL)	RxPDO, TxPDO
	04	SLS command4	0 to 1	---	---	A	1 bit (BOOL)	RxPDO, TxPDO
	05	SLS command5	0 to 1	---	---	A	1 bit (BOOL)	RxPDO, TxPDO
	06	SLS command6	0 to 1	---	---	A	1 bit (BOOL)	RxPDO, TxPDO
	07	SLS command7	0 to 1	---	---	A	1 bit (BOOL)	RxPDO, TxPDO
	08	SLS command8	0 to 1	---	---	A	1 bit (BOOL)	RxPDO, TxPDO
6691	---	SLS time to velocity monitoring	---	---	---	---	---	---
	01	SLS time to velocity monitoring 1	---	ms	0	S	2 bytes (U16)	---
	02	SLS time to velocity monitoring 2	---	ms	0	S	2 bytes (U16)	---
	03	SLS time to velocity monitoring 3	---	ms	0	S	2 bytes (U16)	---
	04	SLS time to velocity monitoring 4	---	ms	0	S	2 bytes (U16)	---
	05	SLS time to velocity monitoring 5	---	ms	0	S	2 bytes (U16)	---
	06	SLS time to velocity monitoring 6	---	ms	0	S	2 bytes (U16)	---
	07	SLS time to velocity monitoring 7	---	ms	0	S	2 bytes (U16)	---
	08	SLS time to velocity monitoring 8	---	ms	0	S	2 bytes (U16)	---
6693	---	SLS velocity limit	---	---	---	---	---	---
	01	SLS velocity limit 1	1 to 20,000	r/min	100	S	4 bytes (U32)	---
	02	SLS velocity limit 2	1 to 20,000	r/min	100	S	4 bytes (U32)	---
	03	SLS velocity limit 3	1 to 20,000	r/min	100	S	4 bytes (U32)	---

Index (hex)	Sub-index (hex)	Object name	Setting range	Unit	Default setting	Data attri-bute	Size	PDO map
6693	04	SLS velocity limit 4	1 to 20,000	r/min	100	S	4 bytes (U32)	---
	05	SLS velocity limit 5	1 to 20,000	r/min	100	S	4 bytes (U32)	---
	06	SLS velocity limit 6	1 to 20,000	r/min	100	S	4 bytes (U32)	---
	07	SLS velocity limit 7	1 to 20,000	r/min	100	S	4 bytes (U32)	---
	08	SLS velocity limit 8	1 to 20,000	r/min	100	S	4 bytes (U32)	---
6694	---	SLS time for velocity in limits	---	---	---	---	---	---
	01	SLS time for velocity in limits 1	---	ms	0	S	2 bytes (U16)	---
	02	SLS time for velocity in limits 2	---	ms	0	S	2 bytes (U16)	---
	03	SLS time for velocity in limits 3	---	ms	0	S	2 bytes (U16)	---
	04	SLS time for velocity in limits 4	---	ms	0	S	2 bytes (U16)	---
	05	SLS time for velocity in limits 5	---	ms	0	S	2 bytes (U16)	---
	06	SLS time for velocity in limits 6	---	ms	0	S	2 bytes (U16)	---
	07	SLS time for velocity in limits 7	---	ms	0	S	2 bytes (U16)	---
	08	SLS time for velocity in limits 8	---	ms	0	S	2 bytes (U16)	---
66A0	---	SLP command	---	---	---	---	---	---
	01	SLP command1	0 to 1	---	---	A	1 bit (BOOL)	RxPDO, TxPDO
	02	SLP command2	0 to 1	---	---	A	1 bit (BOOL)	RxPDO, TxPDO
	03	SLP command3	0 to 1	---	---	A	1 bit (BOOL)	RxPDO, TxPDO
	04	SLP command4	0 to 1	---	---	A	1 bit (BOOL)	RxPDO, TxPDO
	05	SLP command5	0 to 1	---	---	A	1 bit (BOOL)	RxPDO, TxPDO
	06	SLP command6	0 to 1	---	---	A	1 bit (BOOL)	RxPDO, TxPDO
	07	SLP command7	0 to 1	---	---	A	1 bit (BOOL)	RxPDO, TxPDO
	08	SLP command8	0 to 1	---	---	A	1 bit (BOOL)	RxPDO, TxPDO
66A2	---	SLP position upper limit	---	---	---	---	---	---
	01	SLP position upper limit 1	---	Encoder unit	62,500	S	4 bytes (INT32)	---
	02	SLP position upper limit 2	---	Encoder unit	62,500	S	4 bytes (INT32)	---
	03	SLP position upper limit 3	---	Encoder unit	62,500	S	4 bytes (INT32)	---
	04	SLP position upper limit 4	---	Encoder unit	62,500	S	4 bytes (INT32)	---
	05	SLP position upper limit 5	---	Encoder unit	62,500	S	4 bytes (INT32)	---
	06	SLP position upper limit 6	---	Encoder unit	62,500	S	4 bytes (INT32)	---
	07	SLP position upper limit 7	---	Encoder unit	62,500	S	4 bytes (INT32)	---

Index (hex)	Sub-index (hex)	Object name	Setting range	Unit	Default setting	Data attri-bute	Size	PDO map
66A2	08	SLP position upper limit 8	---	Encoder unit	62,500	S	4 bytes (INT32)	---
66A4	---	SLP position lower limit	---	---	---	---	---	---
	01	SLP position lower limit 1	---	Encoder unit	-62,500	S	4 bytes (INT32)	---
	02	SLP position lower limit 2	---	Encoder unit	-62,500	S	4 bytes (INT32)	---
	03	SLP position lower limit 3	---	Encoder unit	-62,500	S	4 bytes (INT32)	---
	04	SLP position lower limit 4	---	Encoder unit	-62,500	S	4 bytes (INT32)	---
	05	SLP position lower limit 5	---	Encoder unit	-62,500	S	4 bytes (INT32)	---
	06	SLP position lower limit 6	---	Encoder unit	-62,500	S	4 bytes (INT32)	---
	07	SLP position lower limit 7	---	Encoder unit	-62,500	S	4 bytes (INT32)	---
	08	SLP position lower limit 8	---	Encoder unit	-62,500	S	4 bytes (INT32)	---
66D0	00	SDI positive direction command	0 to 1	---	---	A	1 bit (BOOL)	RxPDO, TxPDO
66D1	00	SDI negative direction command	0 to 1	---	---	A	1 bit (BOOL)	RxPDO, TxPDO
66D3	00	SDI position zero win-dow	1 to 2,147,483,647	Encoder unit	131,072	S	4 bytes (U32)	---
66D5	00	SDI velocity zero window	10 to 20,000	r/min	50	S	4 bytes (U32)	---
E600	---	FSoE Slave Frame Ele-ments Axis Ch1	---	---	---	---	---	---
E600	01	FSoE Slave CMD	---	---	---	---	1 byte (U8)	TxPDO
	02	FSoE Slave Conn_ID	---	---	---	---	2 bytes (U16)	TxPDO
	03	FSoE Slave CRC_0	---	---	---	---	2 bytes (U16)	TxPDO
E601	---	Safety input 1	---	---	---	---	---	---
	01	Safety Connection Sta-tus	---	---	---	---	1 bit (BOOL)	TxPDO
E700	---	FSoE Master Frame Ele-ments Axis Ch1	---	---	---	---	---	---
	01	FSoE Master CMD	00 to FF hex	---	00 hex	---	1 byte (U8)	RxPDO
	02	FSoE Master Conn_ID	0000 to FFFF hex	---	0000 hex	---	2 bytes (U16)	RxPDO
	03	FSoE Master CRC_0	0000 to FFFF hex	---	0000 hex	---	2 bytes (U16)	RxPDO
F980	---	Device Safety Address	---	---	---	---	---	---
	01	FSoE Address	---	---	---	---	2 bytes (U16)	---
	02	Restore Default FSoE Address	---	---	0	A	5 bytes (VS)	---
	03	FSoE Enable Reset	---	---	0	A	7 bytes (VS)	---

A-4 Sysmac Error Status Codes

This section lists and describes the error event codes that you can see in Sysmac Studio.

A-4-1 Error List

The errors (events) that can occur in 1S-series Servo Drives Advance Type with Built-in EtherCAT Communications are given on the following pages.

Event levels are given in the table as follows:

Min: Minor fault level

Obs: Observation

Info: Information

Refer to the *NJ/NX-series Troubleshooting Manual* (Cat. No. W503) for all of the event codes that may occur in an NJ/NX-series Controller.

Event code (hex)	Event name	Description	Assumed cause	Level			Reference
				Min	Obs	Info	
04B50000	Inrush Current Prevention Circuit Error	An error of inrush current prevention circuit was detected.	• Inrush current prevention circuit failure	√			P. A-133
04B60000	Regeneration Circuit Error	An regeneration circuit error was detected.	• There is a short circuit between B2 and N2/N3. • Regeneration circuit failure • Noise into wiring of the external regeneration resistor.	√			P. A-133
05430000	ESC Error	An error occurred in the EtherCAT slave communications controller.	• Error of the EtherCAT slave communications controller or false detection when the AL status code is 0051 hex • Error access from the non-OMRON EtherCAT master when the AL status code is 0050 hex	√			P. A-134
08390000	Power Module Error	An error was detected in the power module.	• There is a short-circuit, ground fault, or contact failure on the U, V, or W motor cable • There is a short-circuit on the wiring of External Regeneration Resistor or the resistance value is small • The insulation resistance failed between the U, V, or W motor cable and the motor ground wire • Servo Drive failure	√			P. A-135
083B0000	Self-diagnosis Error	An error was detected by the self-diagnosis of the safety function.	• False detection due to a data read error that was caused by excessive noise • Hardware failure	√			P. A-136

Event code (hex)	Event name	Description	Assumed cause	Level			Reference
				Min	Obs	Info	
083C0000	Main Circuit Temperature Monitoring Circuit Failure	A temperature monitoring circuit failure was detected on the main circuit.	• Broken wiring of the thermistor, temperature monitoring circuit failure	√			P. A-136
083D0000	Fan Error	The rotation speed of the fan is 40% or less of the rating and the cooling performance decreases.	• There is a foreign matter in the cooling fan and it blocks the rotation • Cooling fan failure	√			P. A-137
083F0000	Regeneration Processing Error	The regeneration processing was stopped to protect the Regeneration Resistor.	• The regeneration processing is set inappropriately • The Regeneration Resistor is selected inappropriately • The Regeneration Resistor is used for continuous regenerative braking • The applied power supply voltage is higher than the specified value • Regeneration Resistor failure	√			P. A-138
08410000	Overvoltage Error	The main circuit power supply voltage (P-N voltage) exceeded the operation guarantee range.	• The P-N voltage exceeded the specified value • The input voltage increased • The Regeneration Resistor wiring is broken • The External Regeneration Resistor is set or selected inappropriately • Servo Drive failure	√			P. A-139
08430000	1-rotation Counter Error	The encoder detected a one-rotation counter error.	• There is excessive noise • Failure due to vibration, impact, condensation, foreign matter, etc.	√			P. A-140
08450000	Encoder Memory Error	The encoder detected a non-volatile memory error.	• False detection due to a data read error that was caused by excessive noise • Non-volatile memory failure • Encoder failure	√			P. A-140
08460000	Absolute Position Detection Error	The encoder detected a multi-rotation counter error.	• A detection error was detected in the multi-rotation detection section of the encoder • There is excessive noise	√			P. A-141
08480000	Main Power Supply Undervoltage (insufficient voltage between P and N)	The main circuit power supply voltage fell below the operation guarantee range during Servo ON.	• Incorrect wiring of the main circuit power supply • The low power supply voltage is applied to the Servo Drive • The long time was set in Momentary Hold Time and the voltage was decreased momentarily • Servo Drive failure	√			P. A-142

Event code (hex)	Event name	Description	Assumed cause	Level			Refer-ence
				Min	Obs	Info	
08490000	Overcurrent Error	The current flowing to the motor exceeded the protection level.	• There is a short circuit, ground fault, contact failure, disconnection, or break on the U, V, or W motor cable • There is a short-circuit on the wiring of External Regeneration Resistor • The insulation resistance failed between the U, V, or W motor cable and the motor ground wire • False detection due to the noise • Servo Drive failure	√			P. A-143
084D0000	Non-volatile Memory Hardware Error	An error occurred on the non-volatile memory.	• False detection due to a data read error that was caused by excessive noise • Non-volatile memory failure	√			P. A-143
086D0000	Motor Temperature Error	The encoder detected the temperature that exceeded the protection level of motor.	• The temperature around the motor is not operating temperature. • The motor is overloaded. • Encoder failure	√			P. A-144
086E0000	Encoder Error	The encoder detected the position information error.	• Noise into the encoder • Hardware failure from mechanical impact, and fault of power supply to the encoder. • Contact failure of the signal line • Encoder failure	√			P. A-145
086F0000	Encoder power supply Error	Encoder power supply error was detected.	• Noise into the encoder cable • Contact failure of the signal line, and disconnection of the encoder • Power supply undervoltage to the encoder • Encoder failure	√			P. A-146
08700000	Encoder Self-diagnosis Error	An error was detected by the self-diagnosis of the encoder.	• False detection due to a data read error that was caused by excessive noise • Encoder failure	√			P. A-146
08710000	Internal Circuit Error at SF Input	Internal circuit error at SF input terminal was detected.	• Failure of safety input circuit of Servo Drive • Memory error or signal error due to transient factors such as soft errors and excessive noise.	√			P. A-147

Event code (hex)	Event name	Description	Assumed cause	Level			Refer-ence
				Min	Obs	Info	
08720000	Internal Circuit Error at SOPT Input	Internal circuit error was detected at SOPT input terminal.	• Failure of SOPT input circuit of Servo Drive • Memory error or signal error due to transient factors such as soft errors and excessive noise.	√			P. A-147
08730000	Internal Circuit Error at Test Output	Internal circuit errors were detected at test output terminal.	• Failure of test output circuit of Servo Drive • Memory error or signal error due to transient factors such as soft errors and excessive noise.	√			P. A-148
08740000	Internal Circuit Error at SBC Output	Internal circuit error was detected at SBC Output terminal.	• Failure of SBC output circuit of Servo Drive • Memory error or signal error due to transient factors such as soft errors and excessive noise.	√			P. A-148
08750000	Overspeed Error	The encoder detected the overspeed.	• The motor was rotated by external forces. • Encoder failure and false detection	√			P. A-149
08760000	Absolute Encoder Multi-rotation Counter Error	The encoder detected a multi-rotation counter error.	• A temporary error occurred in the encoder multi-rotation detection function due to vibration, impact, or condensation. • Encoder failure	√			P. A-149
18380000	System Error	A hardware error due to the self-diagnosis and a fatal software error were detected.	• False detection due to a data read error that was caused by excessive noise • A fatal software error was detected • Hardware failure	√			P. A-150
183A0000	Non-volatile Memory Data Error	An error of data saved in the non-volatile memory was detected.	• Power interruption or noise occurred while parameters other than the safety were saved • Power interruption or noise occurred while the motor identity information was saved • Power interruption or noise occurred while safety parameters were saved	√			P. A-150
246D0000	Motor Non-conformity	The Servo Drive and motor combination is not correct.	• The Servo Drive and motor combination is not correct	√			P. A-151

Event code (hex)	Event name	Description	Assumed cause	Level			Reference
				Min	Obs	Info	
2808 0000	Main Circuit Power Supply Phase Loss Error	The phase loss of the main circuit power supply was detected	• Incorrect wiring, for example the single-phase power supply is input to a 3-phase input type Servo Drive • In the case where the single-phase power supply is input to a single- and 3-phase input type Servo Drive, the phase loss detection is enabled. • The power supply voltage is low or insufficient • Broken wiring of the main circuit power supply input • Servo Drive failure	√			P. A-152
280D 0000	Runaway Detected	The motor rotated in the direction opposite to the command.	• There is incorrect wiring of the motor cable or a broken cable. • The motor rotated in the direction opposite to the command by external forces.	√			P. A-153
357D 0000	DC Setting Error	A mistake was made in the DC Mode operation setting.	• A mistake was made in the DC Mode operation setting	√			P. A-153
357E 0000	Synchronization Cycle Setting Error	When the DC mode was established, the cycle time was set to the inoperable value.	• The variable PDO mapping is used, and the number of objects is more than the maximum number of mapped objects for the cycle time • The cycle time setting is incorrect	√			P. A-154
357F 0000	Mailbox Setting Error	An incorrect mailbox setting of Sync Manager was detected.	• An incorrect mailbox setting of Sync Manager was detected	√			P. A-154
3580 0000	RxPDO Setting Error	An RxPDO setting error was detected.	• The RxPDO setting of EtherCAT master is incorrect • Servo Drive failure	√			P. A-155
3581 0000	TxPDO Setting Error	A TxPDO setting error was detected.	• The TxPDO setting of EtherCAT master is incorrect • Servo Drive failure	√			P. A-155
3582 0000	RxPDO Mapping Error	An incorrect RxPDO was set.	• An incorrect RxPDO was set, such as out of the allowable range of Index, Subindex, or size	√			P. A-156
3583 0000	TxPDO Mapping Error	An incorrect TxPDO was set.	• An incorrect RxPDO was set, such as out of the allowable range of Index, Subindex, or size	√			P. A-156
3584 0000	PDO WDT Setting Error	An incorrect PDO WDT setting was detected.	• An incorrect PDO WDT setting was detected	√			P. A-157

Event code (hex)	Event name	Description	Assumed cause	Level			Reference
				Min	Obs	Info	
35850000	Node Address Updated	The node address is changed to a value of the ID switches.	• The node address is changed from a set value in Sysmac Studio to a value of the ID switches	√			P. A-157
35860000	SM Event Mode Setting Error	The unsupported SM Event Mode was set.	• The unsupported SM Event Mode was set	√			P. A-158
38570000	Function Setting Error	The function that was set does not support the communications period.	• The electronic gear ratio was not 1:1 when the communications period was set to 125 μs. • The Backlash Compensation was enabled when the communications period was set to 125 μs.	√			P. A-158
38780000	General Input Allocation Duplicate Error	More than one function input is allocated to one general input.	• More than one function input is allocated to one general input	√			P. A-159
38790000	General Output Allocation Duplicate Error	More than one function output is allocated to one general output.	• More than one function output is allocated to one general output	√			P. A-159
387B0000	Pulse Output Setting Error	The dividing numerator exceeded the dividing denominator when the Encoder Dividing Pulse Output - Dividing Denominator was set to a value other than 0.	• The dividing numerator exceeded the dividing denominator when the Encoder Dividing Pulse Output - Dividing Denominator was set to a value other than 0	√			P. A-160
387C0000	Motor Replacement Detected	The connected motor is different from the motor that was connected the last time.	• The motor was replaced • The Servo Drive was replaced	√			P. A-160
387F0000	Electronic Gear Setting Error	The electronic gear ratio exceeded the allowable range.	• The electronic gear ratio exceeded the allowable range	√			P. A-161
38800000	Servo Drive Overheat	The internal temperature of Servo Drive exceeded the circuit protection level.	• The ambient temperature of the Servo Drive exceeded the specified value • Overload	√			P. A-161
38810000	Overload Error	The Load Ratio of Servo Drive or motor (4150-81 hex) exceeded 100%.	• Operation was continued for a long time with high load • There is incorrect wiring of the motor cable or a broken cable • Increase in friction	√			P. A-162

Event code (hex)	Event name	Description	Assumed cause	Level			Reference
				Min	Obs	Info	
38820000	Regeneration Overload Error	The Regeneration Load Ratio (4310-81 hex) exceeded the regeneration overload ratio.	• The regeneration processing is set inappropriately • The Regeneration Resistor is selected inappropriately • The Regeneration Resistor is used for continuous regenerative braking • The applied power supply voltage is higher than the specified value • Regeneration Resistor failure	√			P. A-163
38830000	Excessive Position Deviation Error	The position deviation is greater than or equal to the value set in the Following error window.	• The motor operation does not follow the command • The value of Following error window is small	√			P. A-164
38840000	Excessive Speed Deviation Error	The speed deviation is greater than or equal to the value set in the Excessive Velocity Deviation Detection Level.	• The motor operation does not follow the command because a parameter value is inappropriate • The output axis of motor is limited on the operation by external forces • The value of the Excessive Velocity Deviation Detection Level is inappropriate	√			P. A-165
38850000	Excessive Speed Error	The feedback motor speed is greater than or equal to the value set in the Excessive Speed Detection Level.	• The velocity command value is too large • Overshooting occurred • The motor was rotated by external forces	√			P. A-166
38860000	Following Error Counter Overflow	The following error value exceeded the range from -2147483648 to 2147483647.	• The motor operation does not follow the command • The motor is rotated or limited on the operation by external forces	√			P. A-167
38870000	Absolute Encoder Counter Overflow Error	The multi-rotation counter of the encoder exceeded the maximum number of rotations.	• An inappropriate value was set in the **Encoder - Operation Selection when Using Absolute Encoder** (4510-01 hex) • The multi-rotation number of the encoder exceeded the maximum number of rotations	√			P. A-167
38880000	Safety Communications Setting Error	Safety process data communications were not established with the Safety CPU Unit because of an incorrect communications setting.	• The watchdog time was set incorrectly • The processing was not completed within the watchdog time because communications were not established due to the noise	√			P. A-168

Event code (hex)	Event name	Description	Assumed cause	Level			Reference
				Min	Obs	Info	
38890000	Safety Frame Error	Safety process data communications were not established with the Safety CPU Unit because an incorrect frame was received.	• An incorrect frame was received in safety process data communications • There is excessive noise	√			P. A-169
388B0000	FSoE Slave Address Error	Safety process data communications were not established with the Safety CPU Unit because of an incorrect FSoE slave address.	• The setting of the FSoE slave address in the safety process data communications settings is different from the setting in the Unit	√			P. A-169
38980000	Safety Function Setting Error	Incorrect safety function setting was detected.	• Safety function data is broken. • Safety function setting is incorrect in the attached information.	√			P. A-170
38990000	Safety Parameter Error	Safety process data communications were not established with the Safety CPU Unit because an incorrect parameter was received.	• The specified safety slave model is incorrect. • There is discrepancy between safety function setting downloaded to EtherCAT master and safety application data downloaded to safety controller.	√			P. A-171
48080000	FPGA WDT Error	An FPGA error was detected.	• False detection due to a data read error that was caused by excessive noise • Hardware failure	√			P. A-172
64E30000	Drive Prohibition Input Error	Both the Positive Drive Prohibition (POT) and the Negative Drive Prohibition Input (NOT) turned ON.	• An error occurred on the switch, wire, power supply, and wiring that were connected to the Positive Drive Prohibition (POT) or Negative Drive Prohibition Input (NOT) • False detection occurred because the control signal power supply was turned ON slowly	√			P. A-172
68200000	Drive Prohibition Detected	The operation was stopped according to the user setting because the motor ran in the prohibited direction when the Drive Prohibition was enabled.	• Incorrect or broken wiring of Positive Drive Prohibition Input (POT) or Negative Drive Prohibition Input (NOT) • Incorrect setting of the Drive Prohibition Input	√			P. A-173

Event code (hex)	Event name	Description	Assumed cause	Level			Refer-ence
				Min	Obs	Info	
68210000	Control Right Release Error	Communications between the Sysmac Studio and Servo Drive were interrupted while a specific function was used from the Sysmac Studio.	• The USB cable or EtherCAT cable was disconnected during the connection with the Sysmac Studio • There is excessive noise • A command sent from the Sysmac Studio was not sent to the Servo Drive because the computer was in a busy state or the like	√			P. A-174
68220000	Error Stop Input	The Error Stop Input (ESTP) is active.	• The Error Stop Input (ESTP) was input • The Error Stop Input (ESTP) is incorrectly wired	√			P. A-174
68230000	Software Limit Exceeded	The Position actual value detected the position that exceeded the value set in the Software Position Limit, and stopped the operation according to the user setting.	• Incorrect setting of Software Position Limit • When the Software Position Limit - Stop Selection was set to *Stop according to the setting of Fault reaction option code*, the position exceeded the value set in the Software Position Limit	√			P. A-175
68370000	SOPT Input Monitoring Error	Improper installation of SOPT input device and the malfunction were detected.	• Dual channel input device is not connected. • Two single-channel input devices were used as dual-channel input devices, and inputs did not match. • SOPT Input Terminal Setting is different from specification of input device. • Speed where a work passed SOPT1/SOPT2 exceeded 200 r/min. • Failure of input device. • Disconnection of input device connection cable.	√			P. A-176

Event code (hex)	Event name	Description	Assumed cause	Level			Refer-ence
				Min	Obs	Info	
68380000	Safety Function Error	A problem on use of safety functions is detected.	• SLP function: Safety origin position is not determined. • SLP function: **Discrepancy Distance** is incorrectly set. • SLP function: Disconnection of cable for connection with SOPT input device • SLS function: Operation of SLS command is not appropriate. • Safety Position/Velocity Validation Monitoring Function: A motor does not rotate as commanded or the overshooting occurs. • Safety Position/Velocity Validation Monitoring Function: External forces rotate a motor or limit the operation. • SOPT input device and encoder are broken.	√			P. A-177
68390000	Discrepancy Error at SF Input	Discrepancy between safety input1 and safety input2 was detected.	• SF+ input contacts power line (+ side) with 24 VDC • Ground fault of SF+ input • Disconnection of SF+ input or SF- input • Short circuit of SF1+ input and SF2+ input. • Inappropriate safety controller setting or the failure	√			P. A-178
683A0000	SBC Relay Diagnosis Error	Improper wiring of terminals between SBC RFB and an error of safety relay for SBC were detected.	• Wrong wiring between a safety relay and SBC RFB terminals • **Safety Relay OFF Delay Time** is inappropriate. • **Safety Relay Activate** is set inappropriately. • Wrong wiring of SBC RFB terminals • Failure of safety relay.	√			P. A-179
683B0000	External Test Signal Failure at SOPT Input	An error was detected in test pulse diagnosis for SOPT input.	• SOPT input wiring contacts IOV input wiring. • There is short circuit in the wiring of SOPT1 input and SOPT2 input. • Failure of externally connected equipment. • **Test Pulse Diagnosis** is set inappropriately.	√			P. A-180

Event code (hex)	Event name	Description	Assumed cause	Level			Refer-ence
				Min	Obs	Info	
683C0000	Overload Detected at Test Output	Overcurrent was detected at the test output terminals.	• Ground fault of the test output to IOG input • Failure of externally connected equipment.	√			P. A-181
683D0000	Stuck-at-high Detected at Test Output	Stuck ON was detected at test output terminals.	• The wiring of the test output contacts the wiring of IOV input. • There is short circuit in SOPT1 input and SOPT2 input. • Memory abnormality or signal abnormality due to transient factors such as software errors and excessive noise. • Failure of the test output circuit of Servo Drive	√			P. A-182
683E0000	Overload Detected at SBC Output	Overcurrent was detected at the SBC output terminal.	• Ground fault of SBC+ output to SBC CM input. • The wiring of SBC- output contacts SBC PS input. • Output of a power supply is out of specifications. • Memory error or signal abnormality due to transient factors such as soft errors and excessive noise. • Failure of SBC circuit of Servo Drive	√			P. A-183
683F0000	Stuck-at-high Detected at SBC Output	Stuck ON was detected at the SBC output terminals.	• The wiring of SBC+ output contacts SBC PS input. • Ground fault of SBC- output to IOG input. • Memory error or signal abnormality due to transient factors such as soft errors and excessive noise. • Failure of SBC circuit of Servo Drive	√			P. A-184
68400000	IOV Power Supply Voltage Error	Voltage error of IOV power supply was detected.	• IOV power supply is not turned on. • Overvoltage of IOV power supply	√			P. A-185
68410000	SBC Power Supply Voltage Error	Voltage error of SBC power supply was detected.	• SBC power supply is not turned on. • The SBC power supply voltage exceeds the specification upper limit value.	√			P. A-185

Event code (hex)	Event name	Description	Assumed cause	Level			Refer-ence
				Min	Obs	Info	
68420000	Monitoring Limit Exceedance Error	A monitoring error was detected in safety monitoring functions.	(1) Each position and velocity exceeded a monitoring range/limit for safety monitoring functions. • SOS function: Safety Present Pulse Position exceeded SOS position zero window. Safety Present Motor velocity exceeded SOS velocity zero window. • SLS function: Safety Present Position exceeded SLS velocity limit. • SLP function: Safety Current Position exceeded a range from SLP Position Upper Limit to SLP Position Lower Limit. • SDI function: Safety Present Motor Velocity exceeded SDI velocity zero window to rotation limit direction. And, Safety Present Pulse Position exceeded SDI position zero window to rotation limit direction. (2) Safety Position/Velocity Validation Monitoring Function: The monitoring limit values/ranges for the safety functions are set lower than the allowable ranges of the safety position/the velocity validation monitoring function.	√			P. A-186
78200000	Pulse Output Overspeed Error	The speed, which exceeded the frequency that could be output by the Encoder Dividing Pulse Output function, was detected.	• The dividing ratio setting is inappropriate for the actual usage condition	√			P. A-187
78210000	Brake Interlock Error	The Brake Interlock Output (BKIR) was output by the Timeout at Servo OFF.	• The Brake Interlock Output (BKIR) was output because the motor rotation speed did not decrease to or less than the speed set in the Threshold Speed at Servo OFF within the time set in the Timeout at Servo OFF when Servo OFF was performed during the motor operation	√			P. A-188

Event code (hex)	Event name	Description	Assumed cause	Level			Refer-ence
				Min	Obs	Info	
78230000	Command Error	A mistake was made in using a command.	• When bit 9 (Remote) of the Statusword was set to *1* (remote), and the Servo Drive was in *Operation enabled* state (Servo ON), the Servo Drive received a command to change the communications state from Operational to another state (Init, Pre-Operational, or Safe-Operational) • A mode of operation other than the hm mode was set during the homing operation • Modes of operation was set to pp, pv or hm mode when the communications period was set to shorter than 250 μs	√			P. A-189
84B10000	EtherCAT State Change Error	A communications state change command was received for which the current communications state could not be changed.	• A communications state change command was received for which the current communications state could not be changed	√			P. A-189
84B20000	EtherCAT Illegal State Change Error	An undefined communications state change command was received.	• An undefined communications state change command was received	√			P. A-190
84B40000	Synchronization Error	A signal for synchronous communications could not be detected.	• Noise • Error of the EtherCAT slave communications controller	√			P. A-190
84B50000	Sync Manager WDT Error	PDO communications were interrupted for the allowable period or longer.	• An EtherCAT communications cable is disconnected, loose, or broken • Host controller error	√			P. A-191
84B60000	ESC Initialization Error	The initialization of EtherCAT slave communications controller failed.	• Data was incorrectly overwritten in the non-volatile memory of the EtherCAT slave communications controller • Failure of the EtherCAT slave communications controller	√			P. A-191
84B70000	SII Verification Error	An error occurred in SII data of the EtherCAT slave communications controller.	• Data was incorrectly overwritten in the non-volatile memory of the EtherCAT slave communications controller • Failure of the EtherCAT slave communications controller or false detection	√			P. A-192

Event code (hex)	Event name	Description	Assumed cause	Level			Reference
				Min	Obs	Info	
84B90000	Synchronization Interruption Error	Synchronization interruption did not occur within the specified period.	• Incorrect EtherCAT synchronization setting of the host controller • Failure of the EtherCAT slave communications controller or false detection	√			P. A-192
84BA0000	Bootstrap State Transition Request Error	The state transition to unsupported Bootstrap was requested.	• The EtherCAT master requested the transition of unsupported Bootstrap	√			P. A-193
88100000	Communications Synchronization Error	Communications were not established consecutively because the synchronization with the EtherCAT Master could not be achieved.	• The power supply to the host controller was interrupted during PDO communications. • An EtherCAT communications cable is disconnected, broken, short-circuited, or has a contact failure in a daisy chain configuration. • An EtherCAT communications cable is broken, short-circuited, or has a contact failure in a ring topology configuration. • Noise • Failure of the EtherCAT physical layer of a Servo Drive	√			P. A-194
88120000	Safety Communications Timeout	A communications timeout occurred in safety process data communications with the Safety CPU Unit.	• A setting is not correct. The setting of the safety task period of the Safety CPU Unit is too short • There is excessive noise • The Safety CPU Unit or safety slave entered a status where it could not continue safety process data communications	√			P. A-195
98200000	Absolute Value Cleared	The multi-rotation counter of the absolute encoder was cleared.	• The multi-rotation counter of the absolute encoder was cleared	√			P. A-195
081C0000	Capacitor Lifetime Warning	The capacitor built into the Servo Drive reached the service life.	• The operating time of the capacitor in the Servo Drive exceeded the service life		√		P. A-196
081D0000	Inrush Current Prevention Relay Lifetime Warning	The inrush current prevention relay built into the Servo Drive reached the service life.	• The number of operating times of the inrush current prevention relay in the Servo Drive exceeded the service life		√		P. A-196
08470000	Encoder Lifetime Warning	The encoder lifetime is close to the end.	• Temporary noise • The end of the encoder life		√		P. A-197
084C0000	Fan Rotation Warning	The rotation speed of the fan is 80% or less of the rating and the cooling performance decreases.	• There is a foreign matter in the cooling fan and it blocks the rotation • Cooling fan failure		√		P. A-197

Event code (hex)	Event name	Description	Assumed cause	Level			Refer-ence
				Min	Obs	Info	
084E0000	Absolute Encoder Counter Overflow Warning	The multi-rotation counter of the encoder exceeded the value set in **Encoder** - **Absolute Encoder Counter Overflow Warning Level** (4510-02 hex).	• An inappropriate value was set in the **Encoder** - **Operation Selection when Using Absolute Encoder** (4510-01 hex) • The multi-rotation number of the encoder exceeded the warning level		√		P. A-198
08770000	Safety Relay Lifetime Warning	A safety relay for SBC reached the lifetime counting.	• Use numbers of safety relay for SBC surpassed **Safety Relay Lifetime Warning Detection Thresholds**.		√		P. A-198
18390000	Lifetime Information Corruption Warning	An error was detected in the saved lifetime information.	• The lifetime information corruption was detected when the power supply was turned ON		√		P. A-199
34E00000	Data Setting Warning	The object set value is out of the range.	• The object set value is out of the range		√		P. A-199
387A0000	Overload Warning	The Load Ratio of Servo Drive or motor (4150-81 hex) exceeded the level set in **Overload** - **Warning Notification Level** (4150-01 hex).	• Operation was continued for a long time with high load. • There is incorrect wiring of the motor cable or a broken cable • Increase in friction		√		P. A-200
387D0000	Regeneration Overload Warning	The **Regeneration Load Ratio** (4310-81 hex) exceeded 85% of the regeneration overload ratio.	• The regeneration processing is set inappropriately • The Regeneration Resistor is selected inappropriately • The Regeneration Resistor is used for continuous regenerative braking • The applied power supply voltage is higher than the specified value • Regeneration Resistor failure		√		P. A-201
387E0000	Motor Vibration Warning	The motor vibration, which was higher than or equal to the level set in the **Vibration Detection** - **Detection Level** (3B70-01 hex), was detected.	• The control parameter is set inappropriately • The rigidity decreased due to mechanical looseness or wear		√		P. A-202

Event code (hex)	Event name	Description	Assumed cause	Level			Refer-ence
				Min	Obs	Info	
78220000	Command Warning	A command could not be executed.	• The *Switch ON* command was received • The *Enable operation* command was received • An operation command in the prohibition direction was received after the immediate stop by the Drive Prohibition Input or Software Position Limit • Homing started • The positioning start command was received in the Profile position mode		√		P. A-203
84B00000	EtherCAT Communications Warning	An EtherCAT communications error occurred more than one time.	• An EtherCAT communications cable is disconnected, broken, short-circuited, or has a contact failure in a daisy chain configuration. • In a ring topology configuration, the ring disconnection status occurred. • In a ring topology configuration, the ring disconnection status was fixed. • Noise • Failure of the EtherCAT physical layer of a Servo Drive		√		P. A-204
90A00000	Unit Restarted	Restart was performed.	• Restart was performed			√	P. A-204
98220000	Memory All Cleared	The Unit setting was cleared.	• Clear All Memory was performed			√	P. A-205
98230000	Motor Rotation Direction Selection Non-conformity	Discrepancy of **Motor Rotation Direction Selection** and **Safety Motor Rotation Direction Selection** was detected.	• Motor rotatoin settings are different in **Motor Rotation Direction Selection** and **Safety Motor Rotation Direction Selection**.			√	P. A-205
98240000	Event Log Cleared	The event log was cleared.	• Clear Event Log was performed			√	P. A-206
98250000	STO Detected	The safety input OFF state was detected via the safety input signal or EtherCAT communications.	• There are detached wires and the disconnection of safety input cable. • Incorrect safety programming of safety controller. • Torque off request was detected at safety input signal. • Torque off request was detected by commands via EtherCAT communication.			√	P. A-206

A-4-2 Error Descriptions

This section describes errors.

Error Table

The items that are used to describe individual errors (events) are described in the following copy of an error table.

<table>
<tr><td>Event name</td><td colspan="2">Gives the name of the error (event).</td><td>Event code</td><td colspan="2">Gives the code of the error (event).</td></tr>
<tr><td>Description</td><td colspan="5">Gives a short description of the error (event).</td></tr>
<tr><td>Source</td><td colspan="2">Gives the source of the error (event).</td><td>Source details</td><td>Gives details on the source of the error.</td><td>Detection timing</td><td>Tells when the error is detected.</td></tr>
<tr><td>Error attributes</td><td>Level</td><td>Tells the influence on control.*1</td><td>Recovery</td><td>Gives the recovery method.*2</td><td>Log category</td><td>Tells which log the error is saved in.</td></tr>
<tr><td>Effects</td><td>User program</td><td>Tells what will happen to execution of the user program.*3</td><td>Operation</td><td colspan="3">Provides special information on the operation that results from the error (event).</td></tr>
<tr><td rowspan="2">Indicators</td><td colspan="2">EtherCAT NET RUN</td><td>EtherCAT NET ERR</td><td colspan="2">EtherCAT LINK/ACT</td></tr>
<tr><td colspan="5">Gives the status of the built-in EtherNet/IP port and built-in EtherCAT port indicators. Indicator status is given only for errors in the EtherCAT Master Function Module and the EtherNet/IP Function Module.</td></tr>
<tr><td rowspan="2">System -defined variables</td><td colspan="2">Variable</td><td>Data type</td><td colspan="2">Name</td></tr>
<tr><td colspan="5">Lists the variable names, data types, and meanings for system-defined variables that provide direct error notification, that are directly affected by the error, or that contain settings that cause the error.</td></tr>
<tr><td rowspan="2">Cause and correction</td><td colspan="2">Assumed cause</td><td>Correction</td><td colspan="2">Prevention</td></tr>
<tr><td colspan="5">Lists the possible causes, corrections, and preventive measures for the error (event).</td></tr>
<tr><td>Attached information</td><td colspan="5">Provides the additional information that is displayed by the Sysmac Studio or an NS-series PT.</td></tr>
<tr><td>Precautions/ Remarks</td><td colspan="5">Provides precautions, restrictions, and supplemental information.</td></tr>
</table>

*1. One of the following:
Minor fault: Minor fault level
Observation
Information

*2. One of the following:
Automatic recovery: Normal status is restored automatically when the cause of the error is removed.
Error reset: Normal status is restored when the error is reset after necessary measures are taken.
Cycle the power supply: Normal status is restored when the power supply is turned OFF and then back ON after necessary measures are taken.
Replace the Servo Drive: Normal status is restored when the Servo Drive is replaced with a new one.

*3. “Continues.” indicates that execution of the user program will continue.

Error Descriptions

Event name	Inrush Current Prevention Circuit Error			**Event code**	04B50000 hex	
Meaning	An error of inrush current prevention circuit was detected.					
Source	EtherCAT Master Function Module		**Source details**	Slave	**Detection timing**	During Servo ON
Error attributes	**Level**	Minor fault	**Recovery**	Error reset (after cycling slave power)	**Log category**	System log
Effects	**User program**	Continues.	**Operation**	Power drive circuit is OFF		
Indicators	**EtherCAT NET RUN**		**EtherCAT NET ERR**		**EtherCAT LINK/ACT**	
	---		---		---	
System -defined variables	**Variable**		**Data type**		**Name**	
	None		None		None	
Cause and correction	**Assumed cause**		**Correction**		**Prevention**	
	Inrush current prevention circuit failure		Replace the Servo Drive.		None	
Attached information	None					
Precautions/ Remarks	AL status code: -, Error No.: 1403 hex					

Event name	Regeneration Circuit Error			**Event code**	04B60000 hex	
Meaning	An regeneration circuit error was detected.					
Source	EtherCAT master function module		**Source details**	Slave	**Detection timing**	Continuously
Error attributes	**Level**	Minor fault	**Recovery**	Error reset (after cycling slave power)	**Log category**	System log
Effects	**User program**	Continues.	**Operation**	Power drive circuit is OFF		
Indicators	**EtherCAT NET RUN**		**EtherCAT NET ERR**		**EtherCAT LINK/ACT**	
	---		---		---	
System -defined variables	**Variable**		**Data type**		**Name**	
	None		None		None	
Cause and correction	**Assumed cause**		**Correction**		**Prevention**	
	There is a short circuit between B2 and N2/N3.		Perform the correct wiring, referring the cases of the connection with peripheral devices.		Perform the correct wiring.	
	Regeneration circuit failure.		Replace the Servo Drive.		None	
	Noise into wiring of the external regeneration resistor.		Take noise countermeasures by shortening wiring or the like.		Take noise countermeasures.	
Attached information	None					
Precautions/ Remarks	AL status code: -, Error No.: 1801 hex					

Event name	ESC Error			**Event code**	05430000 hex	
Meaning	An error occurred in the EtherCAT slave communications controller.					
Source	EtherCAT Master Function Module		**Source details**	Slave	**Detection timing**	At power ON
Error attributes	**Level**	Minor fault	**Recovery**	Error reset (after cycling slave power)	**Log category**	System log
Effects	**User program**	Continues.	**Operation**	Power drive circuit is OFF		
Indicators	**EtherCAT NET RUN**		**EtherCAT NET ERR**		**EtherCAT LINK/ACT**	
	---		---		---	
System -defined variables	**Variable**		**Data type**		**Name**	
	None		None		None	
Cause and correction	**Assumed cause**		**Correction**		**Prevention**	
	Error of the EtherCAT slave communications controller or false detection when the AL status code is 0051 hex		If this event occurs repeatedly after you cycled the power supply, the EtherCAT slave communications controller is faulty. Replace the Servo Drive.		None	
	Error access from the non-OMRON EtherCAT master when the AL status code is 0050 hex		Please contact the manufacturer of EtherCAT master.			
Attached information	None					
Precautions/ Remarks	AL status code: 0050 hex or 0051 hex, Error No.: 8804 hex					

Event name	Power Module Error			**Event code**	08390000 hex	
Description	An error was detected in the power module.					
Source	EtherCAT Master Function Module		**Source details**	Slave	**Detection timing**	Continuously
Error attributes	**Level**	Minor fault	**Recovery**	Error reset (after cycling slave power)	**Log category**	System log
Effects	**User program**	Continues.	**Operation**	Power drive circuit is OFF		
Indicators	**EtherCAT NET RUN**		**EtherCAT NET ERR**		**EtherCAT LINK/ACT**	
	---		---		---	
System -defined variables	**Variable**		**Data type**		**Name**	
	None		None		None	
Cause and correction	**Assumed cause**		**Correction**		**Prevention**	
	There is a short-circuit, ground fault, or contact failure on the U, V, or W motor cable		Correct the connection of the U, V, or W motor cable.		Confirm that the motor cables are not broken and connect them correctly.	
	There is a short-circuit on the wiring of External Regeneration Resistor or the resistance value is small		If there is a short-circuit on the wiring of External Regeneration Resistor, correct the wiring.		Wire the External Regeneration Resistor correctly when using it. Use the recommended External Regeneration Resistor. If a resistance value of the External Regeneration Resistor is small, excessive current will flow into the power module and cause a failure.	
	The insulation resistance failed between the U, V, or W motor cable and the motor ground wire		Replace the motor.		Confirm that the insulation resistance is insulated between the U, V, and W motor cable and the motor ground wire before using the motor.	
	Servo Drive failure		If this event occurs again after you performed all corrections shown above, replace the Servo Drive.		Do not perform Servo ON/OFF frequently. Doing so may cause a Servo Drive failure.	
Attached information	Attached information 1: System information					
Precautions/ Remarks	AL status code: -, Error No.: 1401 hex					

Event name	Self-diagnosis Error			**Event code**	083B0000 hex	
Description	An error was detected by the self-diagnosis of the safety function.					
Source	EtherCAT Master Function Module		**Source details**	Slave	**Detection timing**	Continuously
Error attributes	**Level**	Minor fault	**Recovery**	Error reset (after cycling slave power)	**Log category**	System log
Effects	**User program**	Continues.	**Operation**	Power drive circuit is OFF		
Indicators	**EtherCAT NET RUN**		**EtherCAT NET ERR**		**EtherCAT LINK/ACT**	
	---		---		---	
System -defined variables	**Variable**		**Data type**		**Name**	
	None		None		None	
Cause and correction	**Assumed cause**		**Correction**		**Prevention**	
	False detection due to a data read error that was caused by excessive noise		If this event does not occur after you cycled the power supply, use the product continuously. It is supposed that a temporary error occurred due to a read error. If this event occurs again, replace the Servo Drive.		If the normal operation can restart after you cycled the power supply, consider noise countermeasures. There may be excessive noise around the Servo Drive.	
	Hardware failure					
Attached information	Attached information 1: System information					
Precautions/ Remarks	AL status code: -, Error No.: 3502 hex					

Event name	Main Circuit Temperature Monitoring Circuit Failure			**Event code**	083C0000 hex	
Description	A temperature monitoring circuit failure was detected on the main circuit.					
Source	EtherCAT Master Function Module		**Source details**	Slave	**Detection timing**	Continuously
Error attributes	**Level**	Minor fault	**Recovery**	Error reset (after cycling slave power)	**Log category**	System log
Effects	**User program**	Continues.	**Operation**	Power drive circuit is OFF		
Indicators	**EtherCAT NET RUN**		**EtherCAT NET ERR**		**EtherCAT LINK/ACT**	
	---		---		---	
System -defined variables	**Variable**		**Data type**		**Name**	
	None		None		None	
Cause and correction	**Assumed cause**		**Correction**		**Prevention**	
	Broken wiring of the thermistor, temperature monitoring circuit failure		If this event occurs repeatedly after you cycled the power supply, replace the Servo Drive.		None	
Attached information	None					
Precautions/ Remarks	AL status code: -, Error No.: 5800 hex					

Event name	Fan Error			**Event code**	083D 0000 hex	
Description	The rotation speed of the fan is 40% or less of the rating and the cooling performance decreases.					
Source	EtherCAT Master Function Module		**Source details**	Slave	**Detection timing**	Continuously
Error nattributes	**Level**	Minor fault	**Recovery**	Error reset (after resetting slave errors)	**Log category**	System log
Effects	**User program**	Continues.	**Operation**	Power drive circuit is OFF		
Indicators	**EtherCAT NET RUN**		**EtherCAT NET ERR**		**EtherCAT LINK/ACT**	
	---		---		---	
System -defined variables	**Variable**		**Data type**		**Name**	
	None		None		None	
Cause and correction	**Assumed cause**		**Correction**		**Prevention**	
	There is a foreign matter in the cooling fan and it blocks the rotation		Check whether there is a foreign matter in the fan. If you find a foreign matter, remove it.		Do not use the fan in an area surrounded by excessive foreign matter. Also, do not allow foreign objects to enter.	
	Cooling fan failure		If there is no improvement after you performed the correction above, replace the Servo Drive.			
Attached information	None					
Precautions/ Remarks	AL status code: -, Error No.: 5900 hex					

Event name	Regeneration Processing Error			**Event code**	083F 0000 hex	
Description	The regeneration processing was stopped to protect the Regeneration Resistor.					
Source	EtherCAT Master Function Module		**Source details**	Slave	**Detection timing**	Continuously
Error attributes	**Level**	Minor fault	**Recovery**	Error reset (after cycling slave power)	**Log category**	System log
Effects	**User program**	Continues.	**Operation**	Power drive circuit is OFF		
Indicators	**EtherCAT NET RUN**		**EtherCAT NET ERR**		**EtherCAT LINK/ACT**	
	---		---		---	
System -defined variables	**Variable**		**Data type**		**Name**	
	None		None		None	
Cause and correction	**Assumed cause**		**Correction**		**Prevention**	
	The regeneration processing is set inappropriately		Check the regeneration processing setting, and set the same value as the resistance value of the Regeneration Resistor in use.		Check the items given for corrections in advance and take countermeasures as required.	
	The Regeneration Resistor is selected inappropriately		Check the operation pattern by the velocity monitor. Check the load ratio of Regeneration Resistor, and perform the following corrections accordingly. • Increase the deceleration time and stopping time. • Decrease the command velocity to the motor. • Use an External Regeneration Resistor. • Increase the capacity of the Servo Drive and the motor.			
	The Regeneration Resistor is used for continuous regenerative braking		The Regeneration Resistor cannot be used for continuous regenerative braking.		Do not use the Regeneration Resistor for continuous regenerative braking.	
	The applied power supply voltage is higher than the specified value		Apply the specified power supply voltage.		Review the power supply voltage to be the specified value before use.	
	Regeneration Resistor failure		Check whether the Regeneration Resistor is faulty, and use one without failures.		Confirm that the Regeneration Resistor is not faulty before use.	
Attached information	None					
Precautions/ Remarks	AL status code: -, Error No.: 1802 hex					

Event name	Overvoltage Error			**Event code**	0841 0000 hex	
Meaning	The main circuit power supply voltage (P-N voltage) exceeded the operation guarantee range.					
Source	EtherCAT Master Function Module		**Source details**	Slave	**Detection timing**	Continuously
Error attributes	**Level**	Minor fault	**Recovery**	Error reset (after cycling slave power)	**Log category**	System log
Effects	**User program**	Continues.	**Operation**	Power drive circuit is OFF		
Indicators	**EtherCAT NET RUN**		**EtherCAT NET ERR**		**EtherCAT LINK/ACT**	
	---		---		---	
System -defined variables	**Variable**		**Data type**		**Name**	
	None		None		None	
Cause and correction	**Assumed cause**		**Correction**		**Prevention**	
	The P-N voltage exceeded the specified value		Input the correct voltage.		Input the correct voltage.	
	The input voltage increased		Use appropriately external devices such as UPS.		Use appropriately external devices such as UPS.	
	The Regeneration Resistor wiring is broken		If a resistance value of the external resistor is infinite between the terminal B1 and B2 of the Servo Drive, the wiring is broken. Replace the external resistor.		Check a resistance value of the external resistor.	
	The External Regeneration Resistor is set or selected inappropriately		Confirm the necessary regeneration processing capacity, and connect an appropriate External Regeneration Resistor. Also, set the parameters of the External Regeneration Resistor to the resistance value of the External Regeneration Resistor in use.		Select an External Regeneration Resistor after calculating the necessary regeneration processing capacity because it varies with operation patterns or the like. Also, set the parameter correctly when using the External Regeneration Resistor.	
	Servo Drive failure		If this event occurs again after you performed all corrections shown above, replace the Servo Drive.		None	
Attached information	None					
Precautions/ Remarks	AL status code: -, Error No.: 1200 hex					

Event name	1-rotation Counter Error			**Event code**	08430000 hex	
Description	The encoder detected a one-rotation counter error.					
Source	EtherCAT Master Function Module		**Source details**	Slave	**Detection timing**	Continuously
Error attributes	**Level**	Minor fault	**Recovery**	Error reset (after cycling slave power)	**Log category**	System log
Effects	**User program**	Continues.	**Operation**	Power drive circuit is OFF		
Indicators	**EtherCAT NET RUN**		**EtherCAT NET ERR**		**EtherCAT LINK/ACT**	
	---		---		---	
System -defined variables	**Variable**		**Data type**		**Name**	
	None		None		None	
Cause and correction	**Assumed cause**		**Correction**		**Prevention**	
	There is excessive noise		Take noise countermeasures. If this event occurs after you performed noise countermeasures, the motor is faulty. Replace the motor.		Take noise countermeasures.	
	Failure due to vibration, impact, condensation, foreign matter, etc.				Do not use the product in an area surrounded by excessive foreign matter. Also, do not allow foreign matter to enter.	
Attached information	Attached information 1: System information					
Precautions/ Remarks	AL status code: -, Error No.: 4400 hex					

Event name	Encoder Memory Error			**Event code**	08450000 hex	
Description	The encoder detected a non-volatile memory error.					
Source	EtherCAT Master Function Module		**Source details**	Slave	**Detection timing**	Continuously
Error attributes	**Level**	Minor fault	**Recovery**	Error reset (after cycling slave power)	**Log category**	System log
Effects	**User program**	Continues.	**Operation**	Power drive circuit is OFF		
Indicators	**EtherCAT NET RUN**		**EtherCAT NET ERR**		**EtherCAT LINK/ACT**	
	---		---		---	
System -defined variables	**Variable**		**Data type**		**Name**	
	None		None		None	
Cause and correction	**Assumed cause**		**Correction**		**Prevention**	
	False detection due to a data read error that was caused by excessive noise		If this event occurs after you cycled the power supply, the encoder is faulty. Replace the motor.		None	
	Non-volatile memory failure					
	Encoder failure					
Attached information	None					
Precautions/ Remarks	AL status code: -, Error No.: 4301 hex					

Event name	Absolute Position Detection Error			**Event code**	0846 0000 hex	
Description	The encoder detected a multi-rotation counter error.					
Source	EtherCAT Master Function Module		**Source details**	Slave	**Detection timing**	Continuously
Error attributes	**Level**	Minor fault	**Recovery**	Error reset (after cycling slave power)	**Log category**	System log
Effects	**User program**	Continues.	**Operation**	Power drive circuit is OFF		
Indicators	**EtherCAT NET RUN**		**EtherCAT NET ERR**		**EtherCAT LINK/ACT**	
	---		---		---	
System -defined variables	**Variable**		**Data type**		**Name**	
	None		None		None	
Cause and correction	**Assumed cause**		**Correction**		**Prevention**	
	A detection error was detected in the multi-rotation detection section of the encoder		Perform the Absolute Encoder Setup after cycling the power supply, and update the multi-rotation number.		None	
	There is excessive noise		Take noise countermeasures. Replace the motor if this event occurs repeatedly.		Take noise countermeasures.	
Attached information	None					
Precautions/ Remarks	AL status code: -, Error No.: 4501 hex					

Event name	Main Power Supply Undervoltage (insufficient voltage between P and N)			**Event code**	08480000 hex	
Meaning	The main circuit power supply voltage fell below the operation guarantee range during Servo ON.					
Source	EtherCAT Master Function Module		**Source details**	Slave	**Detection timing**	During Servo ON
Error attributes	**Level**	Minor fault	**Recovery**	Error reset (after resetting slave errors)	**Log category**	System log
Effects	**User program**	Continues.	**Operation**	Power drive circuit is OFF		
Indicators	**EtherCAT NET RUN**		**EtherCAT NET ERR**		**EtherCAT LINK/ACT**	
	---		---		---	
System -defined variables	**Variable**		**Data type**		**Name**	
	None		None		None	
Cause and correction	**Assumed cause**		**Correction**		**Prevention**	
	Incorrect wiring of the main circuit power supply		If the power supply cables are not wired to the main circuit power supply terminals (L1 , L2 , L3), connect them.		Check the wiring of the main circuit power supply before use.	
	The low power supply voltage is applied to the Servo Drive		Increase the power supply capacity if it is small. Measure the applied power supply voltage, and apply the voltage according to the specification.		Apply the voltage appropriate for the Servo Drive.	
	The long time was set in Momentary Hold Time and the voltage was decreased momentarily		Remove the cause that momentarily decreased the voltage. Set a short time in the Momentary Hold Time so as not to detect this error due to a momentary decrease in voltage.		Set an appropriate value in the Momentary Hold Time.	
	Servo Drive failure		If this event occurs again after you performed all corrections shown above, replace the Servo Drive.		None	
Attached information	None					
Precautions/ Remarks	AL status code: -, Error No.: 1300 hex					

Event name	Overcurrent Error			**Event code**	08490000 hex	
Meaning	The current flowing to the motor exceeded the protection level.					
Source	EtherCAT Master Function Module		**Source details**	Slave	**Detection timing**	During Servo ON
Error attributes	**Level**	Minor fault	**Recovery**	Error reset (after cycling slave power)	**Log category**	System log
Effects	**User program**	Continues.	**Operation**	Power drive circuit is OFF		
Indicators	**EtherCAT NET RUN**		**EtherCAT NET ERR**		**EtherCAT LINK/ACT**	
	---		---		---	
System -defined variables	**Variable**		**Data type**		**Name**	
	None		None		None	
Cause and correction	**Assumed cause**		**Correction**		**Prevention**	
	There is a short circuit, ground fault, contact failure, disconnection, or break on the U, V, or W motor cable		Correct the connection of the U, V, or W motor cable. If the cable is broken, replace it.		Confirm that the motor cables are not broken and connect them correctly.	
	There is a short-circuit on the wiring of External Regeneration Resistor		Correct the wiring of External Regeneration Resistor.		Wire the External Regeneration Resistor correctly when using it.	
	The insulation resistance failed between the U, V, or W motor cable and the motor ground wire		Replace the motor.		Confirm that the insulation resistance is insulated between the U, V, and W motor cable and the motor ground wire before connecting and using the motor.	
	False detection due to the noise		Take noise countermeasures.		Take noise countermeasures because excessive noise may cause false detection.	
	Servo Drive failure		If this event occurs again after you performed all corrections shown above, replace the Servo Drive.		Do not perform Servo ON/OFF frequently. Doing so may cause a Servo Drive failure.	
Attached information	None					
Precautions/ Remarks	AL status code: -, Error No.: 1400 hex					

Event name	Non-volatile Memory Hardware Error			**Event code**	084D0000 hex	
Description	An error occurred on the non-volatile memory.					
Source	EtherCAT Master Function Module		**Source details**	Slave	**Detection timing**	At power ON
Error attributes	**Level**	Minor fault	**Recovery**	Error reset	**Log category**	System log
Effects	**User program**	Continues.	**Operation**	Power drive circuit is OFF		
Indicators	**EtherCAT NET RUN**		**EtherCAT NET ERR**		**EtherCAT LINK/ACT**	
	---		---		---	
System -defined variables	**Variable**		**Data type**		**Name**	
	None		None		None	
Cause and correction	**Assumed cause**		**Correction**		**Prevention**	
	False detection due to a data read error that was caused by excessive noise		After you cycled the power supply, if this error occurs continuously although the error is reset, the non-volatile memory is faulty. Replace the Servo Drive.		None	
	Non-volatile memory failure					

Attached information	Attached information 1: System information
Precautions/ Remarks	AL status code: -, Error No.: 3700 hex

Event name	Motor Temperature Error			**Event code**	086D 0000 hex	
Description	The encoder detected the temperature that exceeded the protection level of motor.					
Source	EtherCAT Master Function Module		**Source details**	Slave	**Detection timing**	Continuously
Error attributes	**Level**	Minor fault	**Recovery**	Error reset (after cycling slave power)	**Log category**	System log
Effects	**User program**	Continues.	**Operation**	Power drive circuit is OFF		
Indicators	**EtherCAT NET RUN**		**EtherCAT NET ERR**		**EtherCAT LINK/ACT**	
	---		---		---	
System -defined variables	**Variable**		**Data type**		**Name**	
	None		None		None	
Cause and correction	**Assumed cause**		**Correction**		**Prevention**	
	The temperature around the motor is not operating temperature.		Adjust the temperature around the motor to be within the range of the operating temperature.		Adjust the ambient temperature to be within the range of the operating temperature before using the motor.	
	The motor is overloaded.		Adjust the motor load ratio within the specified range.		Adjust the operation before use, so that the motor load ratio does not become high for a long time.	
	Encoder failure		Replace the motor if this event occurs repeatedly.		None	
Attached information	None					
Precautions/ Remarks	AL status code: -, Error No.: 1503 hex					

Event name	Encoder Error			**Event code**	086E0000 hex	
Description	The communication error was detected between the encoder and the Servo Drive.					
Source	EtherCAT Master Function Module		**Source details**	Slave	**Detection timing**	Continuously
Error attributes	**Level**	Minor fault	**Recovery**	Error reset (after cycling slave power)	**Log category**	System log
Effects	**User program**	Continues.	**Operation**	Power drive circuit is OFF		
Indicators	**EtherCAT NET RUN**		**EtherCAT NET ERR**		**EtherCAT LINK/ACT**	
	---		---		---	
System -defined variables	**Variable**		**Data type**		**Name**	
	None		None		None	
Cause and correction	**Assumed cause**		**Correction**		**Prevention**	
	Noise into the encoder or the integrated cable.		Carry out correct wiring after check of specified connection for the integrated cable and a shield clamp. Use a standard integrated cable.		Carry out correct wiring after check of specified connection for the integrated cable and a shield clamp.	
	Hardware failure from mechanical impact, and fault of power supply to the encoder.		If this event occurs repeatedly after you cycled the power supply, replace the Motor because the encoder is faulty.		None	
	Contact failure of the signal line, and No connection to the integrated cable.		Replace the integrated cable if it is disconnected. Firmly connect the integrated cable to the Servo Drive.		Confirm that the integrated cable is not broken before use, and connect the integrated cable to the Servo Drive securely.	
	Encoder failure		If this event occurs after you performed the corrections above, replace the motor.		None	
Attached information	Attached information 1: System information					
Precautions/ Remarks	AL status code: -, Error No.: 2104 hex					

Event name	Encoder power supply Error			**Event code**	086F0000 hex	
Description	Encoder power supply error was detected.					
Source	EtherCAT Master Function Module		**Source details**	Slave	**Detection timing**	Continuously
Error attributes	**Level**	Minor fault	**Recovery**	Error reset (after cycling slave power)	**Log category**	System log
Effects	**User program**	Continues.	**Operation**	Power drive circuit is OFF		
Indicators	**EtherCAT NET RUN**		**EtherCAT NET ERR**		**EtherCAT LINK/ACT**	
	---		---		---	
System -defined variables	**Variable**		**Data type**		**Name**	
	None		None		None	
Cause and correction	**Assumed cause**		**Correction**		**Prevention**	
	Noise into the encoder cable		Carry out correct wiring after check of e specified connection for integrated cable and a shield clamp. Use a standard integrated cable.		Carry out correct wiring after check of e specified connection for integrated cable and a shield clamp. Use a standard integrated cable.	
	Contact failure of the signal line, and disconnection of the encoder					
	Power supply undervoltage to the encoder					
	Encoder failure		If errors occur after you take measures mentioned above, replace the motor.		None	
Attached information	None					
Precautions/ Remarks	AL status code: -, Error No.: 2105 hex					

Event name	Encoder Self-diagnosis Error			**Event code**	08700000 hex	
Description	An error was detected by the self-diagnosis of the encoder.					
Source	EtherCAT Master Function Module		**Source details**	Slave	**Detection timing**	Continuously
Error attributes	**Level**	Minor fault	**Recovery**	Error reset (after cycling slave power)	**Log category**	System log
Effects	**User program**	Continues.	**Operation**	Power drive circuit is OFF		
Indicators	**EtherCAT NET RUN**		**EtherCAT NET ERR**		**EtherCAT LINK/ACT**	
	---		---		---	
System -defined variables	**Variable**		**Data type**		**Name**	
	None		None		None	
Cause and correction	**Assumed cause**		**Correction**		**Prevention**	
	False detection due to a data read error that was caused by excessive noise		When this event occurs repeatedly even if you cycle the power supply, replace the Motor.		None	
	Encoder failure					
Attached information	Attached information 1: System information					
Precautions/ Remarks	AL status code: -, Error No.: 3507 hex					

Event name	Internal Circuit Error at SF Input			**Event code**	08710000 hex	
Description	Internal circuit error at SF input terminal was detected.					
Source	EtherCAT Master Function Module		**Source details**	Slave	**Detection timing**	Continuously
Error attributes	**Level**	Minor fault	**Recovery**	Error reset (after cycling slave power)	**Log category**	System log
Effects	**User program**	Continues.	**Operation**	Power drive circuit is OFF		
Indicators	**EtherCAT NET RUN**		**EtherCAT NET ERR**		**EtherCAT LINK/ACT**	
	---		---		---	
System -defined variables	**Variable**		**Data type**		**Name**	
	None		None		None	
Cause and correction	**Assumed cause**		**Correction**		**Prevention**	
	Failure of safety input circuit of Servo Drive		Take measures against noise and cycle the power supply. If the error occurs again, replace a Servo Drive.		Take measures against noise.	
	Memory error or signal error due to transient factors such as soft errors and excessive noise.					
Attached information	Attached information 1: Terminals where an error occurs 1: SF1 terminal 2: SF2 terminal					
Precautions/ Remarks	AL status code: -, Error No.: 7113 hex					

Event name	Internal Circuit Error at SOPT Input			**Event code**	08720000 hex	
Description	Internal circuit error was detected at SOPT input terminal.					
Source	EtherCAT Master Function Module		**Source details**	Slave	**Detection timing**	Continuously
Error attributes	**Level**	Minor fault	**Recovery**	Error reset (after cycling slave power)	**Log category**	System log
Effects	**User program**	Continues.	**Operation**	Power drive circuit is OFF		
Indicators	**EtherCAT NET RUN**		**EtherCAT NET ERR**		**EtherCAT LINK/ACT**	
	---		---		---	
System -defined variables	**Variable**		**Data type**		**Name**	
	None		None		None	
Cause and correction	**Assumed cause**		**Correction**		**Prevention**	
	Failure of SOPT input circuit of Servo Drive		Take measures against noise and cycle the power supply. If the error occurs again, replace a Servo Drive.		Take measures against noise.	
	Memory error or signal error due to transient factors such as soft errors and excessive noise.					
Attached information	Attached information 1: Terminals where an error occurs 1: SOPT1 terminal 2: SOPT2 terminal					
Precautions/ Remarks	AL status code: -, Error No.: 7114 hex					

Event name	Internal Circuit Error at Test Output			**Event code**	08730000 hex	
Description	Internal circuit errors were detected at test output terminal.					
Source	EtherCAT Master Function Module		**Source details**	Slave	**Detection timing**	Continuously
Error attributes	**Level**	Minor fault	**Recovery**	Error reset (after cycling slave power)	**Log category**	System log
Effects	**User program**	Continues.	**Operation**	Power drive circuit is OFF		
Indicators	**EtherCAT NET RUN**		**EtherCAT NET ERR**		**EtherCAT LINK/ACT**	
	---		---		---	
System -defined variables	**Variable**		**Data type**		**Name**	
	None		None		None	
Cause and correction	**Assumed cause**		**Correction**		**Prevention**	
	Failure of test output circuit of Servo Drive		Take measures against noise and cycle the power supply. If the error occurs again, replace a Servo Drive.		Take measures against noise.	
	Memory error or signal error due to transient factors such as soft errors and excessive noise.					
Attached information	Attached information 1: Terminals where an error occurs 1: TO1 terminal 2: TO2 terminal					
Precautions/ Remarks	AL status code: -, Error No.: 7155 hex					

Event name	Internal Circuit Error at SBC Output			**Event code**	08740000 hex	
Description	Internal circuit error was detected at SBC Output terminal.					
Source	EtherCAT Master Function Module		**Source details**	Slave	**Detection timing**	Continuously
Error attributes	**Level**	Minor fault	**Recovery**	Error reset (after cycling slave power)	**Log category**	System log
Effects	**User program**	Continues.	**Operation**	Power drive circuit is OFF		
Indicators	**EtherCAT NET RUN**		**EtherCAT NET ERR**		**EtherCAT LINK/ACT**	
	---		---		---	
System -defined variables	**Variable**		**Data type**		**Name**	
	None		None		None	
Cause and correction	**Assumed cause**		**Correction**		**Prevention**	
	Failure of SBC output circuit of Servo Drive		Take measures against noise and cycle the power supply. If the error occurs again, replace a Servo Drive.		Take measures against noise.	
	Memory error or signal error due to transient factors such as soft errors and excessive noise.					
Attached information	Attached information 1: Terminals where an error occurs 1: SBC+ terminal 2: SBC- terminal					
Precautions/ Remarks	AL status code: -, Error No.: 7116 hex					

Event name	Overspeed Error			**Event code**	08750000 hex	
Description	The encoder detected the overspeed.					
Source	EtherCAT Master Function Module		**Source details**	Slave	**Detection timing**	Continuously
Error attributes	**Level**	Minor fault	**Recovery**	Error reset (after cycling slave power)	**Log category**	System log
Effects	**User program**	Continues.	**Operation**	Power drive circuit is OFF		
Indicators	**EtherCAT NET RUN**		**EtherCAT NET ERR**		**EtherCAT LINK/ACT**	
	---		---		---	
System -defined variables	**Variable**		**Data type**		**Name**	
	None		None		None	
Cause and correction	**Assumed cause**		**Correction**		**Prevention**	
	The motor was rotated by external forces.		Take countermeasures so that the motor is not subjected to external forces if the motor is rotated by external forces.		Take countermeasures so that the motor is not rotated by external forces.	
	Encoder failure and false detection		If this event occurs repeatedly, the encoder is broken. Replace the motor.		None	
Attached information	Attached information 1: Detail about the causes 1: Overspeed is detected by a Servo Drive. 2: Over speed is detected by an encoder.					
Precautions/ Remarks	AL status code: -, Error No.: 4700 hex					

Event name	Absolute Encoder Multi-rotation Counter Error			**Event code**	08760000 hex	
Description	The encoder detected a multi-rotation counter error.					
Source	EtherCAT Master Function Module		**Source details**	Slave	**Detection timing**	Continuously
Error attributes	**Level**	Minor fault	**Recovery**	Error reset (after cycling slave power)	**Log category**	System log
Effects	**User program**	Continues.	**Operation**	Power drive circuit is OFF		
Indicators	**EtherCAT NET RUN**		**EtherCAT NET ERR**		**EtherCAT LINK/ACT**	
	---		---		---	
System -defined variables	**Variable**		**Data type**		**Name**	
	None		None		None	
Cause and correction	**Assumed cause**		**Correction**		**Prevention**	
	A temporary error occurred in the encoder multi-rotation detection function due to vibration, impact, or condensation.		Use the product continuously if this event does not occur after improving the operating environment. Replace the motor if this event occurs again.		Do not use the product in an environment where the temperature and vibration resistance exceed the specified level.	
	Encoder failure					
Attached information	Attached information 1: System information					
Precautions/ Remarks	AL status code: -, Error No.: 4500 hex					

Event name	System Error			**Event code**	18380000 hex	
Description	A hardware error due to the self-diagnosis and a fatal software error were detected.					
Source	EtherCAT Master Function Module		**Source details**	Slave	**Detection timing**	Continuously
Error attributes	**Level**	Minor fault	**Recovery**	Error reset (after cycling slave power)	**Log category**	System log
Effects	**User program**	Continues.	**Operation**	Power drive circuit is OFF		
Indicators	**EtherCAT NET RUN**		**EtherCAT NET ERR**		**EtherCAT LINK/ACT**	
	---		---		---	
System -defined variables	**Variable**		**Data type**		**Name**	
	None		None		None	
Cause and correction	**Assumed cause**		**Correction**		**Prevention**	
	False detection due to a data read error that was caused by excessive noise		If this event does not occur after you cycled the power supply, use the product continuously. It is supposed that a temporary error occurred due to a read error. If this event occurs again, a fatal error exists. Replace the Servo Drive.		If the normal operation can restart after you cycled the power supply, consider noise countermeasures. There may be excessive noise around the Servo Drive.	
	A fatal software error was detected					
	Hardware failure					
Attached information	Attached information 1: System information					
Precautions/ Remarks	AL status code: -, Error No.: 3501 hex					

Event name	Non-volatile Memory Data Error			**Event code**	183A0000 hex	
Description	An error of data saved in the non-volatile memory was detected.					
Source	EtherCAT Master Function Module		**Source details**	Slave	**Detection timing**	At power ON
Error attributes	**Level**	Minor fault	**Recovery**	Error reset	**Log category**	System log
Effects	**User program**	Continues.	**Operation**	Power drive circuit is OFF		
Indicators	**EtherCAT NET RUN**		**EtherCAT NET ERR**		**EtherCAT LINK/ACT**	
	---		---		---	
System -defined variables	**Variable**		**Data type**		**Name**	
	None		None		None	
Cause and correction	**Assumed cause**		**Correction**		**Prevention**	
	Power interruption or noise occurred while parameters other than the safety were saved		Save data after setting the parameter again, and cycle the power supply.		Do not interrupt the power while the parameter is saved.	
	Power interruption or noise occurred while the motor identity information was saved		Execute the Motor Setup, and cycle the power supply.			
	Power interruption or noise occurred while safety parameters were saved		Clear the FSoE slave address, execute FSoE Enable Reset, and cycle the power supply.			
Attached information	Attached Information 1: Cause Details 1: Data corruption of parameters other than the safety 2: Data corruption of the motor identity information 3: Data corruption of the safety parameters					
Precautions/ Remarks	AL status code: -, Error No.: 3600 hex					

Event name	Motor Non-conformity			**Event code**	246D 0000 hex	
Description	The Servo Drive and motor combination is not correct.					
Source	EtherCAT Master Function Module		**Source details**	Slave	**Detection timing**	At power ON
Error attributes	**Level**	Minor fault	**Recovery**	Error reset (after cycling slave power)	**Log category**	System log
Effects	**User program**	Continues.	**Operation**	Power drive circuit is OFF		
Indicators	**EtherCAT NET RUN**		**EtherCAT NET ERR**		**EtherCAT LINK/ACT**	
	---		---		---	
System -defined variables	**Variable**		**Data type**		**Name**	
	None		None		None	
Cause and correction	**Assumed cause**		**Correction**		**Prevention**	
	The Servo Drive and motor combination is not correct		Replace the motor with one that matches the Servo Drive.		Use a motor that matches the Servo Drive.	
Attached information	Attached Information 1: Cause Details 1: Error at a time when the capacity of the connected Servomotor does not conform to the capacity of Servo Drive. 2: The Servomotor with different operating voltage is connected.					
Precautions/ Remarks	AL status code: -, Error No.: 9501 hex					

Event name	Main Circuit Power Supply Phase Loss Error			**Event code**	28080000 hex	
Description	The phase loss of the main circuit power supply was detected.					
Source	EtherCAT Master Function Module		**Source details**	Slave	**Detection timing**	Continuously
Error attributes	**Level**	Minor fault	**Recovery**	Error reset (after resetting slave errors)	**Log category**	System log
Effects	**User program**	Continues.	**Operation**	Power drive circuit is OFF		
Indicators	**EtherCAT NET RUN**		**EtherCAT NET ERR**		**EtherCAT LINK/ACT**	
	---		---		---	
System -defined variables	**Variable**		**Data type**		**Name**	
	None		None		None	
Cause and correction	**Assumed cause**		**Correction**		**Prevention**	
	Incorrect wiring, for example the single-phase power supply is input to a 3-phase input type Servo Drive		Confirm the Servo Drive specifications, and perform the correct wiring.		Confirm the Servo Drive specifications, and perform the correct wiring.	
	In the case where the single-phase power supply is input to a single- and 3-phase input type Servo Drive, the phase loss detection is enabled.		Set **Main Circuit Power Supply - Phase Loss Detection Enable** (4320-02 hex) to 0 (disabled).		Disable the phase loss detection when you input the single-phase power supply to a single- and 3-phase input type Servo Drive.	
	The power supply voltage is low or insufficient		Improve power supply conditions by increasing the power supply capacity or the like.		Improve power supply conditions by increasing the power supply capacity or the like.	
	Broken wiring of the main circuit power supply input		Replace the main circuit power supply input cable.		Confirm that the main circuit power supply input cable is not broken before use.	
	Servo Drive failure		If this event occurs again after you performed all corrections shown above, replace the Servo Drive.		None	
Attached information	None					
Precautions/ Remarks	AL status code: -, Error No.: 1301 hex					

Event name	Runaway Detected			**Event code**	280D0000 hex	
Description	The motor rotated in the direction opposite to the command.					
Source	EtherCAT Master Function Module		**Source details**	Slave	**Detection timing**	Continuously
Error attributes	**Level**	Minor fault	**Recovery**	Error reset (after resetting slave errors)	**Log category**	System log
Effects	**User program**	Continues.	**Operation**	Power drive circuit is OFF		
Indicators	**EtherCAT NET RUN**		**EtherCAT NET ERR**		**EtherCAT LINK/ACT**	
	---		---		---	
System -defined variables	**Variable**		**Data type**		**Name**	
	None		None		None	
Cause and correction	**Assumed cause**		**Correction**		**Prevention**	
	There is incorrect wiring of the motor cable or a broken cable.		Connect the motor cable as shown in the wiring diagram. If the cable is broken, replace it. Or, connect the motor cable and encoder cable that are used together to the same motor.		Connect the motor cable as shown in the wiring diagram. Connect the motor cable and encoder cable/external encoder cable that are used together to the same motor.	
	The motor rotated in the direction opposite to the command by external forces.		Take countermeasures so that the motor is not subjected to external forces. Set **Runaway Detection - Enable** (3B71-01 hex) to *0* (**disabled**) when the motor runs as intended.		Take countermeasures so that the motor is not rotated by external forces.	
Attached information	None					
Precautions/ Remarks	AL status code: -, Error No.: 2000 hex					

Event name	DC Setting Error			**Event code**	357D0000 hex	
Description	A mistake was made in the DC Mode operation setting.					
Source	EtherCAT Master Function Module		**Source details**	Slave	**Detection timing**	When establishing EtherCAT communications
Error attributes	**Level**	Minor fault	**Recovery**	Error reset	**Log category**	System log
Effects	**User program**	Continues.	**Operation**	Power drive circuit is OFF		
Indicators	**EtherCAT NET RUN**		**EtherCAT NET ERR**		**EtherCAT LINK/ACT**	
	---		---		---	
System -defined variables	**Variable**		**Data type**		**Name**	
	None		None		None	
Cause and correction	**Assumed cause**		**Correction**		**Prevention**	
	A mistake was made in the DC Mode operation setting		Check the DC Mode setting, and then download it to the EtherCAT master again.		Configure the setting of communications to slaves in the EtherCAT master in accordance with ESI data.	
Attached information	None					
Precautions/ Remarks	AL status code: 0030 hex, Error No.: 9003 hex					

Event name	Synchronization Cycle Setting Error			**Event code**	357E 0000 hex	
Description	When the DC mode was established, the cycle time was set to the inoperable value.					
Source	EtherCAT Master Function Module		**Source details**	Slave	**Detection timing**	When establishing EtherCAT communications
Error attributes	**Level**	Minor fault	**Recovery**	Error reset	**Log category**	System log
Effects	**User program**	Continues.	**Operation**	Power drive circuit is OFF		
Indicators	**EtherCAT NET RUN**		**EtherCAT NET ERR**		**EtherCAT LINK/ACT**	
	---		---		---	
System -defined variables	**Variable**		**Data type**		**Name**	
	None		None		None	
Cause and correction	**Assumed cause**		**Correction**		**Prevention**	
	The variable PDO mapping is used, and the number of objects is more than the maximum number of mapped objects for the cycle time		Set the number of objects to a value smaller than the maximum number of mapped objects for the cycle time.		Confirm the maximum number of mapped objects and the limit on the number of objects before using the variable PDO mapping.	
	The cycle time setting is incorrect		Correct the cycle time setting.		Confirm the EtherCAT slave specifications, and set the cycle time.	
Attached information	None					
Precautions/ Remarks	AL status code: 0035 hex, Error No.: 9004 hex					

Event name	Mailbox Setting Error			**Event code**	357F 0000 hex	
Description	An incorrect mailbox setting of Sync Manager was detected.					
Source	EtherCAT Master Function Module		**Source details**	Slave	**Detection timing**	When establishing EtherCAT communications
Error attributes	**Level**	Minor fault	**Recovery**	Error reset	**Log category**	System log
Effects	**User program**	Continues.	**Operation**	Power drive circuit is OFF		
Indicators	**EtherCAT NET RUN**		**EtherCAT NET ERR**		**EtherCAT LINK/ACT**	
	---		---		---	
System -defined variables	**Variable**		**Data type**		**Name**	
	None		None		None	
Cause and correction	**Assumed cause**		**Correction**		**Prevention**	
	An incorrect mailbox setting of Sync Manager was detected		Check the mailbox setting, and then download it to the EtherCAT master again.		Configure the setting of communications to slaves in the EtherCAT master in accordance with ESI data.	
Attached information	None					
Precautions/ Remarks	AL status code: 0016 hex, Error No.: 9000 hex					

Event name	RxPDO Setting Error			**Event code**	3580 0000 hex	
Meaning	An RxPDO setting error was detected.					
Source	EtherCAT Master Function Module		**Source details**	Slave	**Detection timing**	When establishing EtherCAT communications
Error attributes	**Level**	Minor fault	**Recovery**	Error reset	**Log category**	System log
Effects	**User program**	Continues.	**Operation**	Power drive circuit is OFF		
Indicators	**EtherCAT NET RUN**		**EtherCAT NET ERR**		**EtherCAT LINK/ACT**	
	---		---		---	
System -defined variables	**Variable**		**Data type**		**Name**	
	None		None		None	
Cause and correction	**Assumed cause**		**Correction**		**Prevention**	
	The RxPDO setting of EtherCAT master is incorrect		Correct the RxPDO setting according to the definition of ESI of Servo Drive, and then download it to the EtherCAT master again.		Configure the setting of communications to slaves in the EtherCAT master in accordance with ESI data.	
	Servo Drive failure		If this event occurs repeatedly after the download to the EtherCAT master, the Servo Drive is faulty. Replace the Servo Drive.		None	
Attached information	None					
Precautions/ Remarks	AL status code: 001D hex, Error No.: 9005 hex					

Event name	TxPDO Setting Error			**Event code**	3581 0000 hex	
Meaning	A TxPDO setting error was detected.					
Source	EtherCAT Master Function Module		**Source details**	Slave	**Detection timing**	When establishing EtherCAT communications
Error attributes	**Level**	Minor fault	**Recovery**	Error reset	**Log category**	System log
Effects	**User program**	Continues.	**Operation**	Power drive circuit is OFF		
Indicators	**EtherCAT NET RUN**		**EtherCAT NET ERR**		**EtherCAT LINK/ACT**	
	---		---		---	
System -defined variables	**Variable**		**Data type**		**Name**	
	None		None		None	
Cause and correction	**Assumed cause**		**Correction**		**Prevention**	
	The TxPDO setting of EtherCAT master is incorrect		Correct the TxPDO setting according to the definition of ESI of Servo Drive, and then download it to the EtherCAT master again.		Configure the setting of communications to slaves in the EtherCAT master in accordance with ESI data.	
	Servo Drive failure		If this event occurs repeatedly after the download to the EtherCAT master, the Servo Drive is faulty. Replace the Servo Drive.		None	
Attached information	None					
Precautions/ Remarks	AL status code: 001E hex, Error No.: 9006 hex					

Event name	RxPDO Mapping Error			**Event code**	35820000 hex	
Meaning	An incorrect RxPDO was set.					
Source	EtherCAT Master Function Module		**Source details**	Slave	**Detection timing**	When establishing EtherCAT communications
Error attributes	**Level**	Minor fault	**Recovery**	Error reset	**Log category**	System log
Effects	**User program**	Continues.	**Operation**	Power drive circuit is OFF		
Indicators	**EtherCAT NET RUN**		**EtherCAT NET ERR**		**EtherCAT LINK/ACT**	
	---		---		---	
System -defined variables	**Variable**		**Data type**		**Name**	
	None		None		None	
Cause and correction	**Assumed cause**		**Correction**		**Prevention**	
	An incorrect RxPDO was set, such as out of the allowable range of Index, Subindex, or size		Correct the RxPDO setting, and then download it to the EtherCAT master again.		Confirm the specifications of ETG or FSoE, and configure the setting of communications to slaves in the EtherCAT master in accordance with ESI data.	
Attached information	None					
Precautions/ Remarks	AL status code: 0025 hex, Error No.: 9007 hex					

Event name	TxPDO Mapping Error			**Event code**	35830000 hex	
Meaning	An incorrect TxPDO was set.					
Source	EtherCAT Master Function Module		**Source details**	Slave	**Detection timing**	When establishing EtherCAT communications
Error attributes	**Level**	Minor fault	**Recovery**	Error reset	**Log category**	System log
Effects	**User program**	Continues.	**Operation**	Power drive circuit is OFF		
Indicators	**EtherCAT NET RUN**		**EtherCAT NET ERR**		**EtherCAT LINK/ACT**	
	---		---		---	
System -defined variables	**Variable**		**Data type**		**Name**	
	None		None		None	
Cause and correction	**Assumed cause**		**Correction**		**Prevention**	
	An incorrect TxPDO was set, such as out of the allowable range of Index, Subindex, or size		Correct the TxPDO setting, and then download it to the EtherCAT master again.		Confirm the specifications of ETG or FSoE, and configure the setting of communications to slaves in the EtherCAT master in accordance with ESI data.	
Attached information	None					
Precautions/ Remarks	AL status code: 0024 hex, Error No.: 9008 hex					

Event name	PDO WDT Setting Error			**Event code**	3584 0000 hex	
Meaning	An incorrect PDO WDT setting was detected.					
Source	EtherCAT Master Function Module		**Source details**	Slave	**Detection timing**	When establishing EtherCAT communications
Error attributes	**Level**	Minor fault	**Recovery**	Error reset	**Log category**	System log
Effects	**User program**	Continues.	**Operation**	Power drive circuit is OFF		
Indicators	**EtherCAT NET RUN**		**EtherCAT NET ERR**		**EtherCAT LINK/ACT**	
	---		---		---	
System -defined variables	**Variable**		**Data type**		**Name**	
	None		None		None	
Cause and correction	**Assumed cause**		**Correction**		**Prevention**	
	An incorrect PDO WDT setting was detected		Check the PDO WDT setting, and then download it to the EtherCAT master again.		Configure the setting of communications to slaves in the EtherCAT master in accordance with ESI data.	
Attached information	None					
Precautions/ Remarks	AL status code: 001F hex, Error No.: 9001 hex					

Event name	Node Address Updated			**Event code**	3585 0000 hex	
Description	The node address is changed to a value of the ID switches.					
Source	EtherCAT Master Function Module		**Source details**	Slave	**Detection timing**	When establishing EtherCAT communications
Error attributes	**Level**	Minor fault	**Recovery**	Error reset (after cycling slave power)	**Log category**	System log
Effects	**User program**	Continues.	**Operation**	Not affected.		
Indicators	**EtherCAT NET RUN**		**EtherCAT NET ERR**		**EtherCAT LINK/ACT**	
	---		---		---	
System -defined variables	**Variable**		**Data type**		**Name**	
	None		None		None	
Cause and correction	**Assumed cause**		**Correction**		**Prevention**	
	The node address is changed from a set value in Sysmac Studio to a value of the ID switches		Check the node address value. Set a correct value if it is wrong.		---	
Attached information	None					
Precautions/ Remarks	AL status code: 0061 hex, Error No.: 9009 hex					

Event name	SM Event Mode Setting Error			**Event code**	35860000 hex	
Meaning	The unsupported SM Event Mode was set.					
Source	EtherCAT Master Function Module		**Source details**	Slave	**Detection timing**	When establishing EtherCAT communications
Error attributes	**Level**	Minor fault	**Recovery**	Error reset	**Log category**	System log
Effects	**User program**	Continues.	**Operation**	Power drive circuit is OFF		
Indicators	**EtherCAT NET RUN**		**EtherCAT NET ERR**		**EtherCAT LINK/ACT**	
	---		---		---	
System -defined variables	**Variable**		**Data type**		**Name**	
	None		None		None	
Cause and correction	**Assumed cause**		**Correction**		**Prevention**	
	The unsupported SM Event Mode was set		Check the synchronization setting, and then download it to the EtherCAT master again.		Configure the setting of communications to slaves in the EtherCAT master in accordance with ESI data.	
Attached information	None					
Precautions/ Remarks	AL status code: 0028 hex, Error No.: 9002 hex					

Event name	Function Setting Error			**Event code**	38570000 hex	
Meaning	The function that was set does not support the communications period.					
Source	EtherCAT Master Function Module		**Source details**	Slave	**Detection timing**	When establishing EtherCAT communications
Error attributes	**Level**	Minor fault	**Recovery**	Error reset (after resetting slave errors)	**Log category**	System log
Effects	**User program**	Continues.	**Operation**	Power drive circuit is OFF		
Indicators	**EtherCAT NET RUN**		**EtherCAT NET ERR**		**EtherCAT LINK/ACT**	
	ON		---		---	
System -defined variables	**Variable**		**Data type**		**Name**	
	None		None		None	
Cause and correction	**Assumed cause**		**Correction**		**Prevention**	
	The electronic gear ratio was not 1:1 when the communications period was set to 125 µs.		Correct the electronic gear ratio to 1:1, or set the communications period to longer than 125 µs.		Check the Servo Drive specifications to avoid the amused causes of this event, and use the Servo Drive correctly.	
	The Backlash Compensation was enabled when the communications period was set to 125 µs.		Disable the Backlash Compensation, or set the communications period to longer than 125 µs.			
Attached information	Attached information 1: Condition that was met 1: The electronic gear ratio was not 1:1 2: The Backlash Compensation was enabled					
Precautions/ Remarks	AL status code: - Error No.: 9400 hex					

Event name	General Input Allocation Duplicate Error			**Event code**	3878 0000 hex	
Description	More than one function input is allocated to one general input.					
Source	EtherCAT Master Function Module		**Source details**	Slave	**Detection timing**	At power ON
Error attributes	**Level**	Minor fault	**Recovery**	Error reset (after cycling slave power)	**Log category**	System log
Effects	**User program**	Continues.	**Operation**	Power drive circuit is OFF		
Indicators	**EtherCAT NET RUN**		**EtherCAT NET ERR**		**EtherCAT LINK/ACT**	
	---		---		---	
System -defined variables	**Variable**		**Data type**		**Name**	
	None		None		None	
Cause and correction	**Assumed cause**		**Correction**		**Prevention**	
	More than one function input is allocated to one general input		Correct the duplicate general input allocation.		Confirm that there is no duplicate allocation when setting a function input.	
Attached information	Attached Information 1: Cause Details 1: General Input 1 (IN1) Allocation Duplicate Error 2: General Input 2 (IN2) Allocation Duplicate Error 3: General Input 3 (IN3) Allocation Duplicate Error 4: General Input 4 (IN4) Allocation Duplicate Error 5: General Input 5 (IN5) Allocation Duplicate Error 6: General Input 6 (IN6) Allocation Duplicate Error 7: General Input 7 (IN7) Allocation Duplicate Error 8: General Input 8 (IN8) Allocation Duplicate Error					
Precautions/ Remarks	AL status code: -, Error No.: 3300 hex					

Event name	General Output Allocation Duplicate Error			**Event code**	3879 0000 hex	
Description	More than one function output is allocated to one general output.					
Source	EtherCAT Master Function Module		**Source details**	Slave	**Detection timing**	At power ON
Error attributes	**Level**	Minor fault	**Recovery**	Error reset (after cycling slave power)	**Log category**	System log
Effects	**User program**	Continues.	**Operation**	Power drive circuit is OFF		
Indicators	**EtherCAT NET RUN**		**EtherCAT NET ERR**		**EtherCAT LINK/ACT**	
	---		---		---	
System -defined variables	**Variable**		**Data type**		**Name**	
	None		None		None	
Cause and correction	**Assumed cause**		**Correction**		**Prevention**	
	More than one function output is allocated to one general output		Correct the duplicate general output allocation.		Confirm that there is no duplicate allocation when setting a function output.	
Attached information	Attached information 1: Cause details 1: General Output 1 (OUT1) Allocation Duplicate Error 2: General Output 2 (OUT2) Allocation Duplicate Error 3: General Output 3 (OUT3) Allocation Duplicate Error 4: General Output 4 (OUT4) Allocation Duplicate Error					
Precautions/ Remarks	AL status code: -, Error No.: 3309 hex					

Event name	Pulse Output Setting Error			**Event code**	387B0000 hex	
Description	The dividing numerator exceeded the dividing denominator when the Encoder Dividing Pulse Output - Dividing Denominator was set to a value other than 0.					
Source	EtherCAT Master Function Module		**Source details**	Slave	**Detection timing**	At power ON
Error attributes	**Level**	Minor fault	**Recovery**	Error reset (after cycling slave power)	**Log category**	System log
Effects	**User program**	Continues.	**Operation**	Power drive circuit is OFF		
Indicators	**EtherCAT NET RUN**		**EtherCAT NET ERR**		**EtherCAT LINK/ACT**	
	---		---		---	
System -defined variables	**Variable**		**Data type**		**Name**	
	None		None		None	
Cause and correction	**Assumed cause**		**Correction**		**Prevention**	
	The dividing numerator exceeded the dividing denominator when the **Encoder Dividing Pulse Output - Dividing Denominator** was set to a value other than 0		Correct the setting of Encoder Dividing Pulse Output - Dividing Denominator and Dividing Numerator.		Set the **Encoder Dividing Pulse Output - Dividing Numerator** to a value smaller than the Dividing Denominator.	
Attached information	None					
Precautions/ Remarks	AL status code: -, Error No.: 2801 hex					

Event name	Motor Replacement Detected			**Event code**	387C0000 hex	
Description	The connected motor is different from the motor that was connected the last time.					
Source	EtherCAT Master Function Module		**Source details**	Slave	**Detection timing**	At power ON
Error attributes	**Level**	Minor fault	**Recovery**	Error reset (after cycling slave power)	**Log category**	System log
Effects	**User program**	Continues.	**Operation**	Power drive circuit is OFF		
Indicators	**EtherCAT NET RUN**		**EtherCAT NET ERR**		**EtherCAT LINK/ACT**	
	---		---		---	
System -defined variables	**Variable**		**Data type**		**Name**	
	None		None		None	
Cause and correction	**Assumed cause**		**Correction**		**Prevention**	
	The motor was replaced		Perform the Motor Setup and Absolute Encoder Setup.		After replacing the motor, perform the Motor Setup and Absolute Encoder Setup before use.	
	The Servo Drive was replaced		Perform the Motor Setup.		After replacing the Servo Drive, perform the Motor Setup before use.	
Attached information	None					
Precautions/ Remarks	AL status code: -, Error No.: 9505 hex					

Event name	Electronic Gear Setting Error			**Event code**	387F 0000 hex	
Description	The electronic gear ratio exceeded the allowable range.					
Source	EtherCAT Master Function Module		**Source details**	Slave	**Detection timing**	At power ON
Error attributes	**Level**	Minor fault	**Recovery**	Error reset (after cycling slave power)	**Log category**	System log
Effects	**User program**	Continues.	**Operation**	Power drive circuit is OFF		
Indicators	**EtherCAT NET RUN**		**EtherCAT NET ERR**		**EtherCAT LINK/ACT**	
	---		---		---	
System -defined variables	**Variable**		**Data type**		**Name**	
	None		None		None	
Cause and correction	**Assumed cause**		**Correction**		**Prevention**	
	The electronic gear ratio exceeded the allowable range		Correct the electronic gear ratio to the range from 1/2,000 to 2,000 times.		Set the electronic gear ratio to the range from 1/2,000 to 2,000 times.	
Attached information	None					
Precautions/ Remarks	AL status code: -, Error No.: 9300 hex					

Event name	Servo Drive Overheat			**Event code**	3880 0000 hex	
Meaning	The internal temperature of Servo Drive exceeded the circuit protection level.					
Source	EtherCAT Master Function Module		**Source details**	Slave	**Detection timing**	Continuously
Error attributes	**Level**	Minor fault	**Recovery**	Error reset (after resetting slave errors)	**Log category**	System log
Effects	**User program**	Continues.	**Operation**	Power drive circuit is OFF		
Indicators	**EtherCAT NET RUN**		**EtherCAT NET ERR**		**EtherCAT LINK/ACT**	
	---		---		---	
System -defined variables	**Variable**		**Data type**		**Name**	
	None		None		None	
Cause and correction	**Assumed cause**		**Correction**		**Prevention**	
	The ambient temperature of the Servo Drive exceeded the specified value		Improve the ambient temperature and the cooling conditions of the Servo Drive.		Check the ambient temperature of the Servo Drive and set up the necessary cooling conditions.	
	Overload		Increase the setting of the acceleration/deceleration time or stopping time to lighten the load. Or, increase the capacities of the Servo Drive and the motor.		Increase the setting of the acceleration/deceleration time or stopping time as much as possible to lighten the load.	
Attached information	None					
Precautions/ Remarks	AL status code: -, Error No.: 1500 hex					

Event name	Overload Error			**Event code**	38810000 hex	
Meaning	The Load Ratio of Servo Drive or motor (4105-81 hex) exceeded 100%.					
Source	EtherCAT Master Function Module		**Source details**	Slave	**Detection timing**	During Servo ON
Error attributes	**Level**	Minor fault	**Recovery**	Error reset (after resetting slave errors)	**Log category**	System log
Effects	**User program**	Continues.	**Operation**	Power drive circuit is OFF		
Indicators	**EtherCAT NET RUN**		**EtherCAT NET ERR**		**EtherCAT LINK/ACT**	
	---		---		---	
System -defined variables	**Variable**		**Data type**		**Name**	
	None		None		None	
Cause and correction	**Assumed cause**		**Correction**		**Prevention**	
	Operation was continued for a long time with high load		Perform the following corrections accordingly. • Increase the set value of the acceleration/deceleration time and the stop time. • Lighten the load. • Adjust the gain or inertia ratio. • If torque waveforms oscillate excessively, adjust the system by the tuning so that the oscillation does not occur. • Set the appropriate brake timing. • Increase the capacities of the Servo Drive and the motor.		Check the items given for corrections in advance and take countermeasures as required.	
	There is incorrect wiring of the motor cable or a broken cable		• Connect the motor cable as shown in the wiring diagram. If the cable is broken, replace it. Or, connect the motor cable and encoder cable that are used together to the same motor. • Measure the voltage at the brake terminal. If the brake is applied, release it.		Connect the motor cable as shown in the wiring diagram. Connect the motor cable and encoder cable/external encoder cable that are used together to the same motor.	
	Increase in friction		Check machine conditions and remove the cause of the friction.		Take countermeasures so that machine distortion is not generated.	
Attached information	Attached Information 1: Cause Details 1: The Servo Drive is overloaded 2: The Servomotor is overloaded					
Precautions/ Remarks	AL status code: -, Error No.: 1600 hex					

Event name	Regeneration Overload Error			**Event code**	38820000 hex	
Meaning	The **Regeneration Load Ratio** (4310-81 hex) exceeded the regeneration overload ratio.					
Source	EtherCAT Master Function Module		**Source details**	Slave	**Detection timing**	During Servo ON
Error attributes	**Level**	Minor fault	**Recovery**	Error reset (after cycling slave power)	**Log category**	System log
Effects	**User program**	Continues.	**Operation**	Power drive circuit is OFF		
Indicators	**EtherCAT NET RUN**		**EtherCAT NET ERR**		**EtherCAT LINK/ACT**	
	---		---		---	
System -defined variables	**Variable**		**Data type**		**Name**	
	None		None		None	
Cause and correction	**Assumed cause**		**Correction**		**Prevention**	
	The regeneration processing is set inappropriately		Check the regeneration processing setting, and set the same value as the resistance value of the Regeneration Resistor in use.		Check the items given for corrections in advance and take countermeasures as required.	
	The Regeneration Resistor is selected inappropriately		Check the operation pattern by the velocity monitor. Check the load ratio of Regeneration Resistor, and perform the following corrections accordingly. • Increase the deceleration time and stopping time. • Decrease the command velocity to the motor. • Use an External Regeneration Resistor. • Increase the capacities of the Servo Drive and the motor.			
	The Regeneration Resistor is used for continuous regenerative braking		The Regeneration Resistor cannot be used for continuous regenerative braking.		Do not use the Regeneration Resistor for continuous regenerative braking.	
	The applied power supply voltage is higher than the specified value		Apply the specified power supply voltage.		Review the power supply voltage to be the specified value before use.	
	Regeneration Resistor failure		Check whether the Regeneration Resistor is faulty, and use one without failures.		Confirm that the Regeneration Resistor is not faulty before use.	
Attached information	None					
Precautions/ Remarks	AL status code: -, Error No.: 1800 hex					

Event name	Excessive Position Deviation Error			**Event code**	38830000 hex	
Meaning	The position deviation is greater than or equal to the value set in the Following error window.					
Source	EtherCAT Master Function Module		**Source details**	Slave	**Detection timing**	During Servo ON
Error attributes	**Level**	Minor fault	**Recovery**	Error reset (after resetting slave errors)	**Log category**	System log
Effects	**User program**	Continues.	**Operation**	Power drive circuit is OFF		
Indicators	**EtherCAT NET RUN**		**EtherCAT NET ERR**		**EtherCAT LINK/ACT**	
	---		---		---	
System -defined variables	**Variable**		**Data type**		**Name**	
	None		None		None	
Cause and correction	**Assumed cause**		**Correction**		**Prevention**	
	The motor operation does not follow the command		Identify and remove a cause that limits the motor operation. During the acceleration/deceleration, the command may not be followed depending on operation patterns. In that case, adjust the gain, increase the acceleration/deceleration time or the like.		Adjust the gain and limit values appropriately before use. Set the operation pattern appropriately according to the connected load.	
	The value of Following error window is small		Increase the setting of the Following error window to an acceptable range.		Increase the setting of the Following error window to an acceptable range.	
Attached information	None					
Precautions/ Remarks	AL status code: -, Error No.: 2400 hex					

Event name	Excessive Speed Deviation Error			**Event code**	3884 0000 hex	
Meaning	The speed deviation is greater than or equal to the value set in the Excessive Velocity Deviation Detection Level.					
Source	EtherCAT Master Function Module		**Source details**	Slave	**Detection timing**	During Servo ON
Error attributes	**Level**	Minor fault	**Recovery**	Error reset (after resetting slave errors)	**Log category**	System log
Effects	**User program**	Continues.	**Operation**	Power drive circuit is OFF		
Indicators	**EtherCAT NET RUN**		**EtherCAT NET ERR**		**EtherCAT LINK/ACT**	
	---		---		---	
System -defined variables	**Variable**		**Data type**		**Name**	
	None		None		None	
Cause and correction	**Assumed cause**		**Correction**		**Prevention**	
	The motor operation does not follow the command because a parameter value is inappropriate		Adjust the gain to improve the following ability. Or, increase the acceleration/deceleration time for the internal position command velocity.		Adjust the gain to improve the following ability. Or, increase the acceleration/deceleration time for the internal position command velocity.	
	The output axis of motor is limited on the operation by external forces		Take countermeasures so that the output axis is not limited on the operation by external forces.		Take countermeasures so that the output axis is not limited on the operation by external forces.	
	The value of the **Excessive Velocity Deviation Detection Level** is inappropriate		Increase the setting of the Excessive Velocity Deviation Detection Level to an acceptable range. Disable the Excessive Velocity Deviation Detection if it is unnecessary to monitor the velocity deviation.		Increase the setting of the Excessive Velocity Deviation Detection Level to an acceptable range. Disable the Excessive Velocity Deviation Detection if it is unnecessary to monitor the velocity deviation.	
Attached information	None					
Precautions/ Remarks	AL status code: -, Error No.: 2401 hex					

Event name	Excessive Speed Error			**Event code**	38850000 hex	
Meaning	The feedback motor speed is greater than or equal to the value set in the Excessive Speed Detection Level.					
Source	EtherCAT Master Function Module		**Source details**	Slave	**Detection timing**	During Servo ON
Error attributes	**Level**	Minor fault	**Recovery**	Error reset (after resetting slave errors)	**Log category**	System log
Effects	**User program**	Continues.	**Operation**	Power drive circuit is OFF		
Indicators	**EtherCAT NET RUN**		**EtherCAT NET ERR**		**EtherCAT LINK/ACT**	
	---		---		---	
System -defined variables	**Variable**		**Data type**		**Name**	
	None		None		None	
Cause and correction	**Assumed cause**		**Correction**		**Prevention**	
	The velocity command value is too large		Do not give the excessive velocity command. Check whether the electronic gear ratio is set correctly.		Set the velocity command value within the range in which the feedback motor velocity does not exceed the excess velocity detection level.	
	Overshooting occurred		If overshooting occurred due to faulty gain adjustment, adjust the gain.		Do not increase the gain too much.	
	The motor is rotated by external forces		Check whether the motor is rotated by external forces.		Check whether the motor is rotated by external forces.	
Attached information	None					
Precautions/ Remarks	AL status code: -, Error No.: 2600 hex					

Event name	Following Error Counter Overflow			**Event code**	3886 0000 hex	
Meaning	The following error value exceeded the range from -2147483648 to 2147483647.					
Source	EtherCAT Master Function Module		**Source details**	Slave	**Detection timing**	During Servo ON
Error attributes	**Level**	Minor fault	**Recovery**	Error reset (after resetting slave errors)	**Log category**	System log
Effects	**User program**	Continues.	**Operation**	Power drive circuit is OFF		
Indicators	**EtherCAT NET RUN**		**EtherCAT NET ERR**		**EtherCAT LINK/ACT**	
	---		---		---	
System -defined variables	**Variable**		**Data type**		**Name**	
	None		None		None	
Cause and correction	**Assumed cause**		**Correction**		**Prevention**	
	The motor operation does not follow the command		Identify and remove a cause that limits the motor operation. During the acceleration/deceleration, the command may not be followed depending on operation patterns. In that case, change the operation pattern by increasing the acceleration/deceleration time or the like.		Adjust the gain and limit values appropriately before use. Set the operation pattern appropriately according to the connected load.	
	The Servomotor is rotated or limited on the operation by external forces		Take countermeasures so that the motor is not subjected to external forces.		Take countermeasures so that the motor operation is not interfered by external forces.	
Attached information	None					
Precautions/ Remarks	AL status code: -, Error No.: 2903 hex					

Event name	Absolute Encoder Counter Overflow Error			**Event code**	3887 0000 hex	
Meaning	The multi-rotation counter of the encoder exceeded the maximum number of rotations.					
Source	EtherCAT Master Function Module		**Source details**	Slave	**Detection timing**	Continuously
Error attributes	**Level**	Minor fault	**Recovery**	Error reset (after cycling slave power)	**Log category**	System log
Effects	**User program**	Continues.	**Operation**	Power drive circuit is OFF		
Indicators	**EtherCAT NET RUN**		**EtherCAT NET ERR**		**EtherCAT LINK/ACT**	
	---		---		---	
System -defined variables	**Variable**		**Data type**		**Name**	
	None		None		None	
Cause and correction	**Assumed cause**		**Correction**		**Prevention**	
	An inappropriate value was set in the **Encoder** – **Operation Selection when Using Absolute Encoder** (4510-01 hex)		Set the appropriate value in the **Encoder - Operation Selection when Using Absolute Encoder** (4510-01 hex).		Set the appropriate value in the **Encoder - Operation Selection when Using Absolute Encoder** (4510-01 hex).	
	The multi-rotation number of the encoder exceeded the maximum number of rotations		Set the travel distance so that the multi-rotation number does not exceed the maximum number of rotations.		Set the travel distance so that the multi-rotation number does not exceed the maximum number of rotations.	
Attached information	None					
Precautions/ Remarks	AL status code: -, Error No.: 4100 hex					

Event name	Safety Communications Setting Error			**Event code**	38880000 hex	
Meaning	Safety process data communications were not established with the Safety CPU Unit because of an incorrect communications setting.					
Source	EtherCAT Master Function Module		**Source details**	Slave	**Detection timing**	When establishing FSoE communications
Error attributes	**Level**	Minor fault	**Recovery**	Error reset (after resetting slave errors)	**Log category**	System log
Effects	**User program**	Continues.	**Operation**	Power drive circuit is OFF		
Indicators	**EtherCAT NET RUN**		**EtherCAT NET ERR**		**EtherCAT LINK/ACT**	
	---		---		---	
System -defined variables	**Variable**		**Data type**		**Name**	
	None		None		None	
Cause and correction	**Assumed cause**		**Correction**		**Prevention**	
	The watchdog time was set incorrectly		If the watchdog time of the safety process data communications setting is set to a value inappropriate for the communications cycle or the configuration, correct it, and transfer the setting to the Safety CPU Unit.		Set the watchdog time in consideration of the actual configuration and surrounding environment.	
	The processing was not completed within the watchdog time because communications were not established due to the noise		If there is no improvement after you performed noise countermeasures, set the longer watchdog time, and transfer the setting to the Safety CPU Unit.			
Attached information	None					
Precautions/ Remarks	AL status code: -, Error No.: 7001 hex					

Event name	Safety Frame Error			**Event code**	3889 0000 hex	
Meaning	Safety process data communications were not established with the Safety CPU Unit because an incorrect frame was received.					
Source	EtherCAT Master Function Module		**Source details**	Slave	**Detection timing**	When establishing FSoE communications
Error attributes	**Level**	Minor fault	**Recovery**	Error reset (after resetting slave errors)	**Log category**	System log
Effects	**User program**	Continues.	**Operation**	Power drive circuit is OFF		
Indicators	**EtherCAT NET RUN**		**EtherCAT NET ERR**		**EtherCAT LINK/ACT**	
	---		---		---	
System -defined variables	**Variable**		**Data type**		**Name**	
	None		None		None	
Cause and correction	**Assumed cause**		**Correction**		**Prevention**	
	An incorrect frame was received in safety process data communications		The Servo Drive model does not match the safety slave model that is sent from the safety master. Check the connection configuration and configure it correctly.		Set the system configuration and setup according to the corrections that are given on the left.	
	There is excessive noise		Take noise countermeasures.		Take noise countermeasures if excessive noise caused the error.	
Attached information	None					
Precautions/ Remarks	AL status code: -, Error No.: 7003 hex					

Event name	FSoE Slave Address Error			**Event code**	388B 0000 hex	
Description	Safety process data communications were not established with the Safety CPU Unit because of an incorrect FSoE slave address.					
Source	EtherCAT Master Function Module		**Source details**	Slave	**Detection timing**	When establishing FSoE communications
Error attributes	**Level**	Minor fault	**Recovery**	Error reset (after resetting slave errors)	**Log category**	System log
Effects	**User program**	Continues.	**Operation**	Power drive circuit is OFF		
Indicators	**EtherCAT NET RUN**		**EtherCAT NET ERR**		**EtherCAT LINK/ACT**	
	---		---		---	
System -defined variables	**Variable**		**Data type**		**Name**	
	None		None		None	
Cause and correction	**Assumed cause**		**Correction**		**Prevention**	
	The setting of the FSoE slave address in the safety process data communications settings is different from the setting in the Unit		Perform the FSoE Slave Address Clear for the Servo Drive.		If you use a Servo Drive for which safety process data communications were previously established in another system, perform the FSoE Slave Address Clear before you use the Servo Drive.	
Attached information	None					
Precautions/ Remarks	AL status code: -, Error No.: 7002 hex					

Event name	Safety Function Setting Error			**Event code**	38980000 hex	
Description	Incorrect safety function setting was detected.					
Source	EtherCAT Master Function Module		**Source details**	Slave	**Detection timing**	When establishing FSoE communications
Error attributes	**Level**	Minor fault	**Recovery**	Error reset (after resetting slave errors)	**Log category**	System log
Effects	**User program**	Continues.	**Operation**	Power drive circuit is OFF		
Indicators	**EtherCAT NET RUN**		**EtherCAT NET ERR**		**EtherCAT LINK/ACT**	
	---		---		---	
System -defined variables	**Variable**		**Data type**		**Name**	
	None		None		None	
Cause and correction	**Assumed cause**		**Correction**		**Prevention**	
	Safety function setting is incorrect in the attached information.		• SS1 function: **SS1 Time for Velocity Zero** is set shorter than **SS1 Time to STO**. • SS2 function: **SS2 Time for Velocity Zero** is set shorter than **SS2 Time to SOS**. • SS2 function: SOS Instance corresponding to SS2 instance is mapped to safety PDO Mapping. • SS2 function: **Safety Function Disable Setting** is set correctly to Activate Setting of SS2 command 1 and SOS command. • SLS function: **SLS Time for Velocity in Limits** is set shorter than **SLS Time to Velocity Monitoring**. • SLP function: **Set SLP Position Upper Limit** and **SLP Position Lower Limit** to fulfill the followings*1: **SLP Position Upper Limit** > **SLP Position Lower Limit** **SLP Position Upper Limit** - **SLP Position Lower Limit** ≥ 128 • Set the absolute value of **SLP Position Upper Limit** and **SLP Position Lower Limit** less than 1,048,576 when 1 or 2 is set to **Safety Origin Position Determination Method** (4F00-01hex). • SBC function: **SBC Brake Time Delay** is set shorter than **SS1 Time to STO**.		Set each safety function settings properly.	

Attached information	Attached information 1: Cause details 1: STO parameter 2: SS1 parameter 3: SS2 parameter 4: SOS parameter 5: SLS parameter 6: SLP parameter 7: SDI parameter 8: SBC parameter
Precautions/ Remarks	AL status code: -, Error No.: 7100 hex

*1. SLP position upper limit and SLP position lower limit checks settings with values rounded by the multiple numbers of 128. Refer to Precaution of Correct Use in *8-7-2 Objects Requiring Settings* on page 8-81.

Event name	Safety Parameter Error			**Event code**	38990000 hex	
Meaning	Safety process data communications were not established with the Safety CPU Unit because an incorrect parameter was received.					
Source	EtherCAT Master Function Module		**Source details**	Slave	**Detection timing**	When establishing FSoE communications
Error attributes	**Level**	Minor fault	**Recovery**	Error reset (after cycling slave power)	**Log category**	System log
Effects	**User program**	Continues.	**Operation**	Power drive circuit is OFF		
Indicators	**EtherCAT NET RUN**		**EtherCAT NET ERR**		**EtherCAT LINK/ACT**	
	---		---		---	
System -defined variables	**Variable**		**Data type**		**Name**	
	None		None		None	
Cause and correction	**Assumed cause**		**Correction**		**Prevention**	
	The specified safety slave model is incorrect.		Check whether the connected safety slave model corresponds the safety slave model that is set from the Sysmac Studio. If not correspond, correct it.		Select safety slave models that is suitable for real connection configuration.	
	There is discrepancy between safety function setting downloaded to EtherCAT master and safety application data downloaded to safety controller.		Download a safety function setting to EtherCAT master. Also, download safety application data to a safety controller.		After change of safety function setting, download a safety function setting to EtherCAT master. Also, download safety application data to a safety controller.	
Attached information	None					
Precautions/ Remarks	AL status code: -, Error No.: 7000 hex					

Event name	FPGA WDT Error			**Event code**	48080000 hex	
Description	An FPGA error was detected.					
Source	EtherCAT Master Function Module		**Source details**	Slave	**Detection timing**	Continuously
Error attributes	**Level**	Minor fault	**Recovery**	Error reset (after cycling slave power)	**Log category**	System log
Effects	**User program**	Continues.	**Operation**	Power drive circuit is OFF		
Indicators	**EtherCAT NET RUN**		**EtherCAT NET ERR**		**EtherCAT LINK/ACT**	
	---		---		---	
System -defined variables	**Variable**		**Data type**		**Name**	
	None		None		None	
Cause and correction	**Assumed cause**		**Correction**		**Prevention**	
	False detection due to a data read error that was caused by excessive noise		If this event does not occur after you cycled the power supply, use the product continuously. It is supposed that a temporary error occurred due to a read error. If this event occurs again, the hardware is faulty. Replace the Servo Drive.		If the normal operation can restart after you cycled the power supply, consider noise countermeasures. There may be excessive noise around the Servo Drive.	
	Hardware failure					
Attached information	Attached information 1: System information					
Precautions/ Remarks	AL status code: -, Error No.: 3500 hex					

Event name	Drive Prohibition Input Error			**Event code**	64E30000 hex	
Description	Both the Positive Drive Prohibition (POT) and the Negative Drive Prohibition Input (NOT) turned ON.					
Source	EtherCAT Master Function Module		**Source details**	Slave	**Detection timing**	Continuously
Error attributes	**Level**	Minor fault	**Recovery**	Error reset (after resetting slave errors)	**Log category**	System log
Effects	**User program**	Continues.	**Operation**	Power drive circuit is OFF		
Indicators	**EtherCAT NET RUN**		**EtherCAT NET ERR**		**EtherCAT LINK/ACT**	
	---		---		---	
System -defined variables	**Variable**		**Data type**		**Name**	
	None		None		None	
Cause and correction	**Assumed cause**		**Correction**		**Prevention**	
	An error occurred on the switch, wire, power supply, and wiring that were connected to the Positive Drive Prohibition (POT) or Negative Drive Prohibition Input (NOT)		Check and correct an error on the switch, wire, power supply, and wiring that were connected to the Positive Drive Prohibition Input or Negative Drive Prohibition Input.		Confirm that there are not disconnection and incorrect logic setting, and use the Drive Prohibition Input.	
	False detection occurred because the control signal power supply was turned ON slowly		Check whether the control signal power supply (12 to 24 VDC) is turned ON slowly, and adjust the timing if it is slow.		Adjust the timing at which the control signal power supply is turned ON so that the signal can be input correctly.	
Attached information	None					
Precautions/ Remarks	AL status code: -, Error No.: 3800 hex					

Event name	Drive Prohibition Detected			**Event code**	6820 0000 hex	
Description	The operation was stopped according to the user setting because the motor ran in the prohibited direction when the Drive Prohibition was enabled.					
Source	EtherCAT Master Function Module		**Source details**	Slave	**Detection timing**	Continuously
Error attributes	**Level**	Minor fault	**Recovery**	Error reset (after resetting slave errors)	**Log category**	System log
Effects	**User program**	Continues.	**Operation**	Power drive circuit is OFF		
Indicators	**EtherCAT NET RUN**		**EtherCAT NET ERR**		**EtherCAT LINK/ACT**	
	---		---		---	
System -defined variables	**Variable**		**Data type**		**Name**	
	None		None		None	
Cause and correction	**Assumed cause**		**Correction**		**Prevention**	
	Incorrect or broken wiring of Positive Drive Prohibition Input (POT) or Negative Drive Prohibition Input (NOT)		Correct the wiring if the Positive Drive Prohibition Input (POT) or Negative Drive Prohibition Input (NOT) is wired incorrectly. If the cable is broken, replace it.		Confirm that the Positive Drive Prohibition Input (POT) and Negative Drive Prohibition Input (NOT) are wired correctly. Confirm that the cable is not broken before use.	
	Incorrect setting of the Drive Prohibition Input		Review the setting of the drive prohibition input port and set it correctly.		Configure the setting of the drive prohibition input port to be appropriate for the actual connection condition.	
Attached information	Attached information 1: System information					
Precautions/ Remarks	AL status code: -, Error No.: 3801 hex					

Event name	Control Right Release Error			**Event code**	68210000 hex	
Description	Communications between the Sysmac Studio and Servo Drive were interrupted while a specific function was used from the Sysmac Studio.					
Source	EtherCAT Master Function Module		**Source details**	Slave	**Detection timing**	Continuously
Error attributes	**Level**	Minor fault	**Recovery**	Error reset (after resetting slave errors)	**Log category**	System log
Effects	**User program**	Continues.	**Operation**	Power drive circuit is OFF		
Indicators	**EtherCAT NET RUN**		**EtherCAT NET ERR**		**EtherCAT LINK/ACT**	
	---		---		---	
System -defined variables	**Variable**		**Data type**		**Name**	
	None		None		None	
Cause and correction	**Assumed cause**		**Correction**		**Prevention**	
	The USB cable or EtherCAT cable was disconnected during the connection with the Sysmac Studio		Connect the USB cable or EtherCAT cable between the Servo Drive and the computer that controls the Servo Drive if it is disconnected.		Do not disconnect the cable during the operation of Sysmac Studio.	
	There is excessive noise		Take noise countermeasures for the USB cable or EtherCAT cable.		Use the recommended USB cable or EtherCAT cable.	
	A command sent from the Sysmac Studio was not sent to the Servo Drive because the computer was in a busy state or the like		Finish other applications to reduce the processing load of the computer.		Do not use the Sysmac Studio with more than one application active so that the computer does not go into a busy state.	
Attached information	None					
Precautions/ Remarks	AL status code: -, Error No.: 6200 hex					

Event name	Error Stop Input			**Event code**	68220000 hex	
Meaning	The Error Stop Input (ESTP) is active.					
Source	EtherCAT Master Function Module		**Source details**	Slave	**Detection timing**	Continuously
Error attributes	**Level**	Minor fault	**Recovery**	Error reset (after resetting slave errors)	**Log category**	System log
Effects	**User program**	Continues.	**Operation**	Power drive circuit is OFF		
Indicators	**EtherCAT NET RUN**		**EtherCAT NET ERR**		**EtherCAT LINK/ACT**	
	---		---		---	
System -defined variables	**Variable**		**Data type**		**Name**	
	None		None		None	
Cause and correction	**Assumed cause**		**Correction**		**Prevention**	
	The Error Stop Input (ESTP) was input		Remove the cause of Error Stop Input (ESTP).		A preventative measure is not required because the purpose is to detect an error.	
	The Error Stop Input (ESTP) is incorrectly wired		Correct the wiring if the Error Stop Input (ESTP) is incorrectly wired.		Confirm that the Error Stop Input (ESTP) is correctly wired.	
Attached information	None					
Precautions/ Remarks	AL status code: -, Error No.: 8700 hex					

Event name	Software Limit Exceeded			**Event code**	6823 0000 hex	
Description	The Position actual value detected the position that exceeded the value set in the Software Position Limit, and stopped the operation according to the user setting.					
Source	EtherCAT Master Function Module		**Source details**	Slave	**Detection timing**	Continuously
Error attributes	**Level**	Minor fault	**Recovery**	Error reset (after resetting slave errors)	**Log category**	System log
Effects	**User program**	Continues.	**Operation**	Power drive circuit is OFF		
Indicators	**EtherCAT NET RUN**		**EtherCAT NET ERR**		**EtherCAT LINK/ACT**	
	---		---		---	
System -defined variables	**Variable**		**Data type**		**Name**	
	None		None		None	
Cause and correction	**Assumed cause**		**Correction**		**Prevention**	
	Incorrect setting of Software Position Limit		Correct the setting of Software Position Limit.		Confirm that the setting of Software Position Limit is correct.	
	When the Software Position Limit - Stop Selection was set to *Stop according to the setting of Fault reaction option code*, the position exceeded the value set in the Software Position Limit		Set the command value to be within the range of Software Position Limit.		Set the command value to be within the range of Software Position Limit.	
Attached information	None					
Precautions/ Remarks	AL status code: -, Error No.: 3401 hex					

Event name	SOPT Input Monitoring Error			**Event code**	68370000 hex	
Description	Improper installation of SOPT input device and the malfunction were detected.					
Source	EtherCAT Master Function Module		**Source details**	Slave	**Detection timing**	When establishing FSoE communications/during FSoE communications
Error attributes	**Level**	Minor fault	**Recovery**	Error reset (after resetting slave errors)	**Log category**	System log
Effects	**User program**	Continues.	**Operation**	Power drive circuit is OFF		
Indicators	**EtherCAT NET RUN**		**EtherCAT NET ERR**		**EtherCAT LINK/ACT**	
	---		---		---	
System -defined variables	**Variable**		**Data type**		**Name**	
	None		None		None	
Cause and correction	**Assumed cause**		**Correction**		**Prevention**	
	Detected a gap of the installation positions of SOPT input devices.		Check the installation positions of SOPT input devices.		None	
	The setting of **Discrepancy Distance** (4F00-05 hex) is inappropriate.		When you set *0* to Safety **Origin Position Determination Method** (4F00-01 hex), set a value appropriate for the installation positions of SOPT input devices to **Discrepancy Distance** (4F00-05 hex).		Carry out the setting/wiring in consideration with measures in advance.	
	The setting of **Safety Origin Position Offset** (4F00-04 hex) is inappropriate.		When you set 2 to **Safety Origin Position Determination Method** (4F00-01 hex), set a value appropriate for the installation position of SOPT input device to **Safety Origin Position Offset** (4F00-04 hex).			
	The setting of **Safety Origin Position Tolerance** (4F00-06 hex) is inappropriate.		Set a detected maximum error of SOPT input devices for use to **Safety Origin Position Tolerance** (4F00-06 hex).			
	SOPT Input Terminal Setting is different from specification of input device.		Confirm the specifications of the input device, and set the appropriate value in **SOPT Input Terminal Setting** (4F00-03 hex).		Confirm the specifications of the input device, and set the appropriate value in SOPT Input Terminal Setting.	
	Speed where a work passed SOPT1/SOPT2 exceeded 200 r/min.		Let a work pass through SOPT1/SOPT2 in 200 r/min or less.		Let a work pass through SOPT1/SOPT2 in 200 r/min or less.	
	Failure of input device.		Replace the input device.		None	
	Disconnection of input device connection cable.		Replace the cable.			
Attached information	None					
Precautions/ Remarks	AL status code: -, Error No.: 7101 hex					

Event name	Safety Function Error			**Event code**	68380000 hex	
Description	A problem on use of safety functions is detected.					
Source	EtherCAT Master Function Module		**Source details**	Slave	**Detection timing**	When during FSoE communications
Error attributes	**Level**	Minor fault	**Recovery**	Error reset (after resetting slave errors)	**Log category**	System log
Effects	**User program**	Continues.	**Operation**	Power drive circuit is OFF		
Indicators	**EtherCAT NET RUN**		**EtherCAT NET ERR**		**EtherCAT LINK/ACT**	
	---		---		---	
System -defined variables	**Variable**		**Data type**		**Name**	
	None		None		None	
Cause and correction	**Assumed cause**		**Correction**		**Prevention**	
	Operation conditions for safety function are not fulfilled. • SLP function: Safety origin position is not determined. • SLP function: **Discrepancy Distance** is incorrectly set. • SLP function: Disconnection of cable for connection with SOPT input device • SLS function: Operation of SLS command is not appropriate. • Safety Position/Velocity Validation Monitoring Function: A motor does not rotate as commanded or the overshooting occurs. • Safety Position/Velocity Validation Monitoring Function: External forces rotate a motor or limit the operation.		Refer to Attached information. Take the below actions according to safety functions. • SLP function: After fixing a safety origin position, activate SLP function. • SLP function: When the safety origin position is determined with use of **SOPT1 and SOPT2 Input**, set **Discrepancy Distance** to the specified values. After fixing a safety origin position, activate SLP function. • SLP function: Check that the connection cable of the safety input terminal is not damaged. If the wiring is disconnected, replace with new one. • SLS function: After SLS status goes into SLS state, Reset SLS. • Safety Position/Velocity Validation Monitoring Function: Perform gain adjustment properly, adjusting inertia to a load. Review the operation pattern like lowering maximum operation speed in safety state and increasing acceleration/deceleration time. • Safety Position/Velocity Validation Monitoring Function: Check device and the operation patterns not to permit external forces application to Servomotor.		Set the setup and wiring according to the corrections that are given on the left.	
	SOPT input device and encoder are broken.		If an error occurs repeatedly, replace the input device and the motor with new ones.		None	

Attached information	Attached information 1: Cause details 1 to 8: Safety function error is detected by SLS function. 11 to 18: Safety function error is detected by SLP function. 21: Safety function error is detected by excessive position over allowable window. 22: Safety function error is detected by excessive velocity over allowable limit.
Precautions/ Remarks	AL status code: -, Error No.: 7102 hex

Event name	Discrepancy Error at SF Input			**Event code**	68390000 hex	
Description	Discrepancy between safety input1 and safety input2 was detected.					
Source	EtherCAT Master Function Module		**Source details**	Slave	**Detection timing**	Continuously
Error attributes	**Level**	Minor fault	**Recovery**	Error reset (after resetting slave errors)	**Log category**	System log
Effects	**User program**	Continues.	**Operation**	Power drive circuit is OFF		
Indicators	**EtherCAT NET RUN**		**EtherCAT NET ERR**		**EtherCAT LINK/ACT**	
	---		---		---	
System -defined variables	**Variable**		**Data type**		**Name**	
	None		None		None	
Cause and correction	**Assumed cause**		**Correction**		**Prevention**	
	SF+ input contacts power line (+ side) with 24 VDC		Check wirings of each safety input and carry out the appropriate wiring.		Check wirings of each safety input and carry out the appropriate wiring.	
	Ground fault of SF+ input					
	Disconnection of SF+ input or SF- input					
	Short circuit of SF1+ input and SF2+ input.					
	Inappropriate safety controller setting or the failure		Check the setting of the safety controller and the output operation to the safety input signal. If an error occurs again, replace the safety controller.		None	
Attached information	None					
Precautions/ Remarks	AL status code: -, Error No.: 7104 hex					

Event name	SBC Relay Diagnosis Error			**Event code**	683A0000 hex	
Description	Improper wiring of terminals between SBC RFB and an error of safety relay for SBC were detected.					
Source	EtherCAT Master Function Module		**Source details**	Slave	**Detection timing**	When establishing FSoE communications/during FSoE communications
Error attributes	**Level**	Minor fault	**Recovery**	Error reset (after resetting slave errors)	**Log category**	System log
Effects	**User program**	Continues.	**Operation**	Power drive circuit is OFF		
Indicators	**EtherCAT NET RUN**		**EtherCAT NET ERR**		**EtherCAT LINK/ACT**	
	---		---		---	
System -defined variables	**Variable**		**Data type**		**Name**	
	None		None		None	
Cause and correction	**Assumed cause**		**Correction**		**Prevention**	
	Failure of safety relay		Replace safety relay.		Set the setup and wiring according to the corrections that are given on the left.	
	Wrong wiring between a safety relay and SBC RFB terminal		Wire between SBC RFB terminals and Safety relay correctly.			
	Safety Relay OFF Delay Time is inappropriate.		Set the time longer than Safety relay's operation time to **SBC Safety Relay OFF Delay Time**.			
	SBC Safety Relay Activate is inappropriate.		Review **Safety Relay Activate**. • When using Safety relay: Activate [1] • When not using Safety relay: Deactivate [0]			
	Wrong wiring to SBC RFB terminal		Check external wiring. If a safety relay is not used, do not wire between SBC RFB terminals.			
Attached information	None					
Precautions/ Remarks	AL status code: -, Error No.: 7105 hex					

Event name	External Test Signal Failure at SOPT Input			**Event code**	683B0000 hex	
Description	An error was detected in test pulse diagnosis for SOPT input.					
Source	EtherCAT Master Function Module		**Source details**	Slave	**Detection timing**	When establishing FSoE communications/during FSoE communications
Error attributes	**Level**	Minor fault	**Recovery**	Error reset (after resetting slave errors)	**Log category**	System log
Effects	**User program**	Continues.	**Operation**	Power drive circuit is OFF		
Indicators	**EtherCAT NET RUN**		**EtherCAT NET ERR**		**EtherCAT LINK/ACT**	
	---		---		---	
System -defined variables	**Variable**		**Data type**		**Name**	
	None		None		None	
Cause and correction	**Assumed cause**		**Correction**		**Prevention**	
	SOPT input wiring contacts IOV input wiring.		Check SOPT input wiring and carry out the appropriate wiring.		Set the setup and wiring according to the corrections that are given on the left.	
	There is short circuit in the wiring of SOPT1 input and SOPT2 input.					
	Failure of externally connected equipment.		Replace the external device.			
	Test Pulse Diagnosis is not appropriate.		Reconsider **TestPulse Diagnosis** setting.			
Attached information	Attached information 1: Terminals where an error occurs 1: SOPT1 terminal 2: SOPT2 terminal					
Precautions/ Remarks	AL status code: -, Error No.: 7106 hex					

Event name	Overload Detected at Test Output			**Event code**	683C0000 hex	
Description	Overcurrent was detected at the test output terminals.					
Source	EtherCAT Master Function Module		**Source details**	Slave	**Detection timing**	When establishing FSoE communications/during FSoE communications
Error attributes	**Level**	Minor fault	**Recovery**	Error reset (after resetting slave errors)	**Log category**	System log
Effects	**User program**	Continues.	**Operation**	Power drive circuit is OFF		
Indicators	**EtherCAT NET RUN**		**EtherCAT NET ERR**		**EtherCAT LINK/ACT**	
	---		---		---	
System -defined variables	**Variable**		**Data type**		**Name**	
	None		None		None	
Cause and correction	**Assumed cause**		**Correction**		**Prevention**	
	Ground fault of the test output to IOG input		Check wiring of the test output and carry out appropriate wiring.		Set the setup and wiring according to the corrections that are given on the left.	
	Failure of externally connected equipment.		Replace the external device.			
Attached information	Attached information 1: Terminals where an error occurs 1: TO1 terminal 2: TO2 terminal					
Precautions/ Remarks	AL status code: -, Error No.: 7107 hex					

Event name	Stuck-at-high Detected at Test Output			**Event code**	683D0000 hex	
Description	Stuck ON was detected at test output terminals.					
Source	EtherCAT Master Function Module		**Source details**	Slave	**Detection timing**	When establishing FSoE communications/during FSoE communications
Error attributes	**Level**	Minor fault	**Recovery**	Error reset (after resetting slave errors)	**Log category**	System log
Effects	**User program**	Continues.	**Operation**	Power drive circuit is OFF		
Indicators	**EtherCAT NET RUN**		**EtherCAT NET ERR**		**EtherCAT LINK/ACT**	
	---		---		---	
System -defined variables	**Variable**		**Data type**		**Name**	
	None		None		None	
Cause and correction	**Assumed cause**		**Correction**		**Prevention**	
	The wiring of the test output contacts the wiring of IOV input.		Check each wiring of test output and IOV input and carry out the appropriate wiring.		Set the setup and wiring according to the precautions that are given on the left.	
	There is short circuit in SOPT1 input and SOPT2 input.					
	Failure of the test output circuit of Servo Drive		Take measures against noise and cycle the power supply. If the error occurs again, replace a Servo Drive.		Take measures against noise and cycle the power supply.	
	Memory abnormality or signal abnormality due to transient factors such as soft errors and excessive noise.					
Attached information	Attached information 1: Terminals where an error occurs 1: TO1 terminal 2: TO2 terminal					
Precautions/ Remarks	AL status code: -, Error No.: 7108 hex					

Event name	Overload Detected at SBC Output			**Event code**	683E0000 hex	
Description	Overcurrent was detected at the SBC output terminal.					
Source	EtherCAT Master Function Module		**Source details**	Slave	**Detection timing**	Continuously
Error attributes	**Level**	Minor fault	**Recovery**	Error reset (after resetting slave errors)	**Log category**	System log
Effects	**User program**	Continues.	**Operation**	Power drive circuit is OFF		
Indicators	**EtherCAT NET RUN**		**EtherCAT NET ERR**		**EtherCAT LINK/ACT**	
	---		---		---	
System -defined variables	**Variable**		**Data type**		**Name**	
	None		None		None	
Cause and correction	**Assumed cause**		**Correction**		**Prevention**	
	Ground fault of SBC+ output to SBC CM input.		Check wiring of SBC output and carry out the appropriate wiring.		Set the setup and wiring according to the precautions that are given on the left.	
	The wiring of SBC- output contacts SBC PS input.					
	Output of a power supply is out of specifications.		Check on whether power supply conforms to specifications or not.			
	Failure of SBC circuit of Servo Drive		Take measures against noise and cycle the power supply. If the error occurs again, replace a Servo Drive.		Take measures against noise.	
	Memory error or signal abnormality due to transient factors such as soft errors and excessive noise.					
Attached information	Attached information 1: Terminals where an error occurs 1: SBC+ terminal 2: SBC- terminal					
Precautions/ Remarks	AL status code: -, Error No.: 7109 hex					

Event name	Stuck-at-high Detected at SBC Output			**Event code**	683F0000 hex	
Description	Stuck ON was detected at the SBC output terminals.					
Source	EtherCAT Master Function Module		**Source details**	Slave	**Detection timing**	Continuously
Error attributes	**Level**	Minor fault	**Recovery**	Error reset (after resetting slave errors)	**Log category**	System log
Effects	**User program**	Continues.	**Operation**	Power drive circuit is OFF		
Indicators	**EtherCAT NET RUN**		**EtherCAT NET ERR**		**EtherCAT LINK/ACT**	
	---		---		---	
System -defined variables	**Variable**		**Data type**		**Name**	
	None		None		None	
Cause and correction	**Assumed cause**		**Correction**		**Prevention**	
	The wiring of SBC+ output contacts SBC PS input.		Check wiring of SBC output and carry out the appropriate wiring.		Set the setup and wiring according to the precautions that are given on the left.	
	Ground fault of SBC- output to IOG input.					
	Failure of SBC circuit of Servo Drive		Take measures against noise and cycle the power supply. If the error occurs again, replace a Servo Drive.		Take measures against noise.	
	Memory error or signal abnormality due to transient factors such as soft errors and excessive noise.					
Attached information	Attached information 1: Terminals where an error occurs 1: SBC+ terminal 2: SBC- terminal					
Precautions/ Remarks	AL status code: -, Error No.: 7110 hex					

Event name	IOV Power Supply Voltage Error			**Event code**	68400000 hex	
Description	Voltage error of IOV power supply was detected.					
Source	EtherCAT Master Function Module		**Source details**	Slave	**Detection timing**	When establishing FSoE communications/during FSoE communications
Error attributes	**Level**	Minor fault	**Recovery**	Error reset (after resetting slave errors)	**Log category**	System log
Effects	**User program**	Continues.	**Operation**	Power drive circuit is OFF		
Indicators	**EtherCAT NET RUN**		**EtherCAT NET ERR**		**EtherCAT LINK/ACT**	
	---		---		---	
System -defined variables	**Variable**		**Data type**		**Name**	
	None		None		None	
Cause and correction	**Assumed cause**		**Correction**		**Prevention**	
	IOV power supply is not turned on.		Check wiring of IOV power supply and carry out the appropriate wiring.		Set the setup and wiring according to the corrections that are given on the left.	
	Overvoltage of IOV power supply		Check that the power supply voltage is input within the specified range.			
Attached information	None					
Precautions/ Remarks	AL status code: -, Error No.: 7111 hex					

Event name	SBC Power Supply Voltage Error			**Event code**	68410000 hex	
Description	Voltage error of SBC power supply was detected.					
Source	EtherCAT Master Function Module		**Source details**	Slave	**Detection timing**	When establishing FSoE communications/during FSoE communications
Error attributes	**Level**	Minor fault	**Recovery**	Error reset (after resetting slave errors)	**Log category**	System log
Effects	**User program**	Continues.	**Operation**	Power drive circuit is OFF		
Indicators	**EtherCAT NET RUN**		**EtherCAT NET ERR**		**EtherCAT LINK/ACT**	
	---		---		---	
System -defined variables	**Variable**		**Data type**		**Name**	
	None		None		None	
Cause and correction	**Assumed cause**		**Correction**		**Prevention**	
	SBC power supply is not turned on.		Check wiring of SBC power supply and carry out the appropriate wiring.		Set the setup and wiring according to the corrections that are given on the left.	
	The SBC power supply voltage exceeds the specification upper limit value.		Check that the power supply voltage is input within the specified range.			
Attached information	None					
Precautions/ Remarks	AL status code: -, Error No.: 7112 hex					

Event name	Monitoring Limit Exceedance Error			**Event code**	68420000 hex	
Description	A monitoring error was detected in safety monitoring functions.					
Source	EtherCAT Master Function Module		**Source details**	Slave	**Detection timing**	Continuously
Error attributes	**Level**	Minor fault	**Recovery**	Error reset (after resetting slave errors)	**Log category**	System log
Effects	**User program**	Continues.	**Operation**	Power drive circuit is OFF		
Indicators	**EtherCAT NET RUN**		**EtherCAT NET ERR**		**EtherCAT LINK/ACT**	
	---		---		---	
System -defined variables	**Variable**		**Data type**		**Name**	
	None		None		None	
Cause and correction	**Assumed cause**		**Correction**		**Prevention**	
	Each position and velocity exceeded a monitoring range/limit for safety monitoring functions. • SOS function: **Safety Present Pulse Position** exceeded **SOS Position Zero Window**. **Safety Present Motor Velocity** exceeded **SOS Velocity Zero Window**. • SLS function: **Safety Present Motor Velocity** exceeded **SLS Velocity Limit**. • SLP function: **Safety Present Position** exceeded a range from **SLP Position Upper Limit** to **SLP Position Lower Limit**. • SDI function: **Safety Present Motor Velocity** exceeded **SDI Velocity Zero Window** to rotation limit direction. And, **Safety Present Pulse Position** exceeded **SDI Position Zero Window** to rotation limit direction.		Review user program so that **Safety Present Position**, **Safety Present Pulse Position** and **Safety Present Motor Velocity** are set respectively within monitoring window/limit set in each safety monitoring function. Or, set the monitoring window/limit for each safety monitoring function.		Perform a setting with consideration of precautions.	
	Safety Position/Velocity Validation Monitoring Function: The monitoring limit values/ranges for the safety functions are set lower than the allowable ranges of the safety position/the velocity validation monitoring function.		Check the monitoring ranges of the safety position/the velocity validation monitoring function and the following monitoring limit values and the range for safety monitoring functions to set the values correctly. • **SOS Position Zero Window** • Difference between **SLP Position Upper Limit** and **SLP Position Lower Limit** • **SDI Position Zero Window**			

Attached information	Attached information 1: Cause details 1 to 8: Excessive limit value error was detected with SOS function. 11 to 18: Excessive limit value error was detected with SLS function. 21 to 28: Excessive limit value error was detected with SLP function. 31: Excessive limit value error was detected with SDI function.
Precautions/ Remarks	AL status code: -, Error No.: 7103 hex

Event name	Pulse Output Overspeed Error			**Event code**	7820 0000 hex	
Description	The speed, which exceeded the frequency that could be output by the Encoder Dividing Pulse Output function, was detected.					
Source	EtherCAT Master Function Module		**Source details**	Slave	**Detection timing**	Continuously
Error attributes	**Level**	Minor fault	**Recovery**	Error reset (after resetting slave errors)	**Log category**	System log
Effects	**User program**	Continues.	**Operation**	Power drive circuit is OFF		
Indicators	**EtherCAT NET RUN**		**EtherCAT NET ERR**		**EtherCAT LINK/ACT**	
	---		---		---	
System -defined variables	**Variable**		**Data type**		**Name**	
	None		None		None	
Cause and correction	**Assumed cause**		**Correction**		**Prevention**	
	The dividing ratio setting is inappropriate for the actual usage condition		Correct the setting of Encoder Dividing Pulse Output - Dividing Denominator and Dividing Numerator.		Set the **Encoder Dividing Pulse Output** - **Dividing Denominator** and **Dividing Numerator** to a value appropriate for the maximum speed that is detected during operation.	
Attached information	None					
Precautions/ Remarks	AL status code: -, Error No.: 2800 hex					

Event name	Brake Interlock Error			**Event code**	78210000 hex	
Description	The Brake Interlock Output (BKIR) was output by the Timeout at Servo OFF.					
Source	EtherCAT Master Function Module		**Source details**	Slave	**Detection timing**	Continuously
Error attributes	**Level**	Minor fault	**Recovery**	Error reset (after resetting slave errors)	**Log category**	System log
Effects	**User program**	Continues.	**Operation**	Power drive circuit is OFF		
Indicators	**EtherCAT NET RUN**		**EtherCAT NET ERR**		**EtherCAT LINK/ACT**	
	---		---		---	
System -defined variables	**Variable**		**Data type**		**Name**	
	None		None		None	
Cause and correction	**Assumed cause**		**Correction**		**Prevention**	
	The Brake Interlock Output (BKIR) was output because the motor rotation speed did not decrease to or less than the speed set in the Threshold Speed at Servo OFF within the time set in the Timeout at Servo OFF when Servo OFF was performed during the motor operation		Increase the setting of the Timeout at Servo OFF according to actual operation conditions.		Confirm the corrections that are given on the left before use.	
Attached information	None					
Precautions/ Remarks	AL status code: -, Error No.: 9700 hex					

Event name	Command Error			**Event code**	78230000 hex	
Meaning	A mistake was made in using a command.					
Source	EtherCAT Master Function Module		**Source details**	Slave	**Detection timing**	Continuously
Error attributes	**Level**	Minor fault	**Recovery**	Error reset	**Log category**	System log
Effects	**User program**	Continues.	**Operation**	Power drive circuit is OFF		
Indicators	**EtherCAT NET RUN**		**EtherCAT NET ERR**		**EtherCAT LINK/ACT**	
	---		---		---	
System -defined variables	**Variable**		**Data type**		**Name**	
	None		None		None	
Cause and correction	**Assumed cause**		**Correction**		**Prevention**	
	When bit 9 (Remote) of the Statusword was set to *1* (remote), and the Servo Drive was in *Operation enabled* state (Servo ON), the Servo Drive received a command to change the communications state from Operational to another state (Init, Pre-Operational, or Safe-Operational)		Check the Servo Drive specifications and use the command correctly.		Check the Servo Drive specifications and use the command correctly.	
	A mode of operation other than the hm mode was set during the homing operation					
	Modes of operation was set to pp, pv or hm mode when the communications period was set to shorter than 250 μs					
Attached information	None					
Precautions/ Remarks	AL status code: -, Error No.: 9101 hex					

Event name	EtherCAT State Change Error			**Event code**	84B10000 hex	
Description	A communications state change command was received for which the current communications state could not be changed.					
Source	EtherCAT Master Function Module		**Source details**	Slave	**Detection timing**	Continuously
Error attributes	**Level**	Minor fault	**Recovery**	Error reset (after resetting slave errors)	**Log category**	System log
Effects	**User program**	Continues.	**Operation**	Power drive circuit is OFF		
Indicators	**EtherCAT NET RUN**		**EtherCAT NET ERR**		**EtherCAT LINK/ACT**	
	---		---		---	
System -defined variables	**Variable**		**Data type**		**Name**	
	None		None		None	
Cause and correction	**Assumed cause**		**Correction**		**Prevention**	
	A communications state change command was received for which the current communications state could not be changed		Check the command specifications for communications state transitions in the host controller and correct host controller processing.		Check the command specifications for communications state transitions in the host controller and program host controller processing.	
Attached information	None					
Precautions/ Remarks	AL status code: 0011 hex, Error No.: 8301 hex					

Event name	EtherCAT Illegal State Change Error			**Event code**	84B20000 hex	
Description	An undefined communications state change command was received.					
Source	EtherCAT Master Function Module		**Source details**	Slave	**Detection timing**	Continuously
Error attributes	**Level**	Minor fault	**Recovery**	Error reset (after resetting slave errors)	**Log category**	System log
Effects	**User program**	Continues.	**Operation**	Power drive circuit is OFF		
Indicators	**EtherCAT NET RUN**		**EtherCAT NET ERR**		**EtherCAT LINK/ACT**	
	---		---		---	
System -defined variables	**Variable**		**Data type**		**Name**	
	None		None		None	
Cause and correction	**Assumed cause**		**Correction**		**Prevention**	
	An undefined communications state change command was received		Check the command specifications for communications state transitions in the host controller and correct host controller processing.		Check the command specifications for communications state transitions in the host controller and program host controller processing.	
Attached information	None					
Precautions/ Remarks	AL status code: 0012 hex, Error No.: 8302 hex					

Event name	Synchronization Error			**Event code**	84B40000 hex	
Description	A signal for synchronous communications could not be detected.					
Source	EtherCAT Master Function Module		**Source details**	Slave	**Detection timing**	Continuously
Error attributes	**Level**	Minor fault	**Recovery**	Error reset (after resetting slave errors)	**Log category**	System log
Effects	**User program**	Continues.	**Operation**	Power drive circuit is OFF		
Indicators	**EtherCAT NET RUN**		**EtherCAT NET ERR**		**EtherCAT LINK/ACT**	
	---		---		---	
System -defined variables	**Variable**		**Data type**		**Name**	
	None		None		None	
Cause and correction	**Assumed cause**		**Correction**		**Prevention**	
	Noise		Take noise countermeasures if excessive noise affects the EtherCAT communications cable.		Take noise countermeasures if excessive noise affects the EtherCAT communications cable.	
	Error of the EtherCAT slave communications controller		If this event occurs again after you cycled the power supply, replace the Servo Drive.		None	
Attached information	None					
Precautions/ Remarks	AL status code: 002C hex, Error No.: 8304 hex					

Event name	Sync Manager WDT Error			**Event code**	84B50000 hex	
Description	PDO communications were interrupted for the allowable period or longer.					
Source	EtherCAT Master Function Module		**Source details**	Slave	**Detection timing**	Continuously
Error attributes	**Level**	Minor fault	**Recovery**	Error reset (after resetting slave errors)	**Log category**	System log
Effects	**User program**	Continues.	**Operation**	Power drive circuit is OFF		
Indicators	**EtherCAT NET RUN**		**EtherCAT NET ERR**		**EtherCAT LINK/ACT**	
	---		---		---	
System -defined variables	**Variable**		**Data type**		**Name**	
	None		None		None	
Cause and correction	**Assumed cause**		**Correction**		**Prevention**	
	An EtherCAT communications cable is disconnected, loose, or broken		Connect the EtherCAT communications cable securely.		Connect the EtherCAT communications cable securely.	
	Host controller error		Check the operation of the host controller. Take appropriate countermeasures if there is a problem.		None	
Attached information	None					
Precautions/ Remarks	AL status code: 001B hex, Error No.: 8305 hex					

Event name	ESC Initialization Error			**Event code**	84B60000 hex	
Description	The initialization of EtherCAT slave communications controller failed.					
Source	EtherCAT Master Function Module		**Source details**	Slave	**Detection timing**	At power ON
Error attributes	**Level**	Minor fault	**Recovery**	Error reset (after cycling slave power)	**Log category**	System log
Effects	**User program**	Continues.	**Operation**	Power drive circuit is OFF		
Indicators	**EtherCAT NET RUN**		**EtherCAT NET ERR**		**EtherCAT LINK/ACT**	
	---		---		---	
System -defined variables	**Variable**		**Data type**		**Name**	
	None		None		None	
Cause and correction	**Assumed cause**		**Correction**		**Prevention**	
	Data was incorrectly overwritten in the non-volatile memory of the EtherCAT slave communications controller		If this event does not occur after you cycled the power supply, use the product continuously. It is supposed that a temporary error occurred due to a read error. If this event occurs again, replace the Servo Drive.		None	
	Failure of the EtherCAT slave communications controller					
Attached information	None					
Precautions/ Remarks	AL status code: -, Error No.: 8801 hex					

Event name	SII Verification Error			**Event code**	84B70000 hex	
Description	An error occurred in SII data of the EtherCAT slave communications controller.					
Source	EtherCAT Master Function Module		**Source details**	Slave	**Detection timing**	At power ON
Error attributes	**Level**	Minor fault	**Recovery**	Error reset (after cycling slave power)	**Log category**	System log
Effects	**User program**	Continues.	**Operation**	Power drive circuit is OFF		
Indicators	**EtherCAT NET RUN**		**EtherCAT NET ERR**		**EtherCAT LINK/ACT**	
	---		---		---	
System -defined variables	**Variable**		**Data type**		**Name**	
	None		None		None	
Cause and correction	**Assumed cause**		**Correction**		**Prevention**	
	Data was incorrectly overwritten in the non-volatile memory of the EtherCAT slave communications controller		If this event does not occur after you cycled the power supply, use the product continuously. It is supposed that a temporary error occurred due to a read error. If this event occurs again, replace the Servo Drive.		None	
	Failure of the EtherCAT slave communications controller or false detection					
Attached information	None					
Precautions/ Remarks	AL status code: 0014 hex, Error No.: 8803 hex					

Event name	Synchronization Interruption Error			**Event code**	84B90000 hex	
Description	Synchronization interruption did not occur within the specified period.					
Source	EtherCAT Master Function Module		**Source details**	Slave	**Detection timing**	Continuously
Error attributes	**Level**	Minor fault	**Recovery**	Error reset (after cycling slave power)	**Log category**	System log
Effects	**User program**	Continues.	**Operation**	Power drive circuit is OFF		
Indicators	**EtherCAT NET RUN**		**EtherCAT NET ERR**		**EtherCAT LINK/ACT**	
	---		---		---	
System -defined variables	**Variable**		**Data type**		**Name**	
	None		None		None	
Cause and correction	**Assumed cause**		**Correction**		**Prevention**	
	Incorrect EtherCAT synchronization setting of the host controller		Set the synchronization setting of the host controller according to the synchronization specifications for the EtherCAT slave.		Confirm the synchronization specifications for the EtherCAT slave, and configure the synchronization setting from the host controller correctly.	
	Failure of the EtherCAT slave communications controller or false detection		If this event does not occur after you cycled the power supply, use the product continuously. It is supposed that a temporary error occurred due to a read error. If this event occurs again, the Servo Drive is faulty. Replace the Servo Drive.		None	
Attached information	None					
Precautions/ Remarks	AL status code: -, Error No.: 8802 hex					

Event name	Bootstrap State Transition Request Error			**Event code**	84BA0000 hex	
Description	The state transition to unsupported Bootstrap was requested.					
Source	EtherCAT Master Function Module		**Source details**	Slave	**Detection timing**	Continuously
Error attributes	**Level**	Minor fault	**Recovery**	Error reset	**Log category**	System log
Effects	**User program**	Continues.	**Operation**	Power drive circuit is OFF		
Indicators	**EtherCAT NET RUN**		**EtherCAT NET ERR**		**EtherCAT LINK/ACT**	
	---		---		---	
System -defined variables	**Variable**		**Data type**		**Name**	
	None		None		None	
Cause and correction	**Assumed cause**		**Correction**		**Prevention**	
	The EtherCAT master requested the transition of unsupported Bootstrap		Check the EtherCAT master setting so that the EtherCAT master does not request the transition to Bootstrap.		Check the EtherCAT master setting so that the EtherCAT master does not request the transition to Bootstrap.	
Attached information	None					
Precautions/ Remarks	AL status code: 0013 hex, Error No.: 8306 hex					

Event name	Communications Synchronization Error			**Event code**	88100000 hex	
Meaning	Communications were not established consecutively because the synchronization with the EtherCAT Master could not be achieved.					
Source	EtherCAT Master Function Module		**Source details**	Slave	**Detection timing**	Continuously
Error attributes	**Level**	Minor fault	**Recovery**	Error reset (after resetting slave errors)	**Log category**	System log
Effects	**User program**	Continues.	**Operation**	Power drive circuit is OFF		
Indicators	**EtherCAT NET RUN**		**EtherCAT NET ERR**		**EtherCAT LINK/ACT**	
	---		---		---	
System -defined variables	**Variable**		**Data type**		**Name**	
	None		None		None	
Cause and correction	**Assumed cause**		**Correction**		**Prevention**	
	The power supply to the host controller was interrupted during PDO communications		Reset the error in the host controller. This event reports an error that was detected when the power supply to the host controller was interrupted. It does not indicate that an error currently exists.		If you turn OFF the power supply to the host controller, also turn OFF the power supply to the Servo Drive.	
	An EtherCAT communications cable is disconnected, broken, short-circuited, or has a contact failure in a daisy chain configuration.		Connect the EtherCAT communications cable securely. If the cable is broken, replace it.		Connect the EtherCAT communications cable securely.	
	An EtherCAT communications cable is broken, short-circuited, or has a contact failure in a ring topology configuration.		• Set **Communications Error Setting** (2200 hex) to 2 or more. • Connect the EtherCAT communications cable securely. If the cable is broken, replace it.		• Set **Communications Error Setting** (2200 hex) to 2 or more. • Connect the EtherCAT communications cable securely. If the cable is broken, replace it.	
	Noise		Take noise countermeasures if excessive noise affects the EtherCAT communications cable.		Take noise countermeasures if excessive noise affects the EtherCAT communications cable.	
	Failure of the EtherCAT physical layer of a Servo Drive		If this event occurs again after you performed all corrections shown above, replace the Servo Drive.		None	
Attached information	None					
Precautions/ Remarks	AL status code: 0034 hex, Error No.: 8303 hex					

Event name	Safety Communications Timeout			**Event code**	88120000 hex	
Meaning	A communications timeout occurred in safety process data communications with the Safety CPU Unit.					
Source	EtherCAT Master Function Module		**Source details**	Slave	**Detection timing**	When establishing FSoE communications/during FSoE communications
Error attributes	**Level**	Minor fault	**Recovery**	Error reset (after resetting slave errors)	**Log category**	System log
Effects	**User program**	Continues.	**Operation**	Power drive circuit is OFF		
Indicators	**EtherCAT NET RUN**		**EtherCAT NET ERR**		**EtherCAT LINK/ACT**	
	---		---		---	
System -defined variables	**Variable**		**Data type**		**Name**	
	None		None		None	
Cause and correction	**Assumed cause**		**Correction**		**Prevention**	
	A setting is not correct. The setting of the safety task period of the Safety CPU Unit is too short		Increase the safety task period of the Safety CPU Unit and then transfer the settings to the Safety CPU Unit.		Set the system configuration and setup according to the corrections that are given on the left.	
	There is excessive noise		Take noise countermeasures.		Take noise countermeasures if excessive noise caused the error.	
	The Safety CPU Unit or safety slave entered a status where it could not continue safety process data communications		Check the status of the Safety CPU Unit or safety slave.		Refer to troubleshooting information for the Safety CPU Unit or safety slave.	
Attached information	None					
Precautions/ Remarks	AL status code: -, Error No.: 7004 hex					

Event name	Absolute Value Cleared			**Event code**	98200000 hex	
Meaning	The multi-rotation counter of the absolute encoder was cleared.					
Source	EtherCAT Master Function Module		**Source details**	Slave	**Detection timing**	Continuously
Error attributes	**Level**	Minor fault	**Recovery**	Error reset (after cycling slave power)	**Log category**	System log
Effects	**User program**	Continues.	**Operation**	Power drive circuit is OFF		
Indicators	**EtherCAT NET RUN**		**EtherCAT NET ERR**		**EtherCAT LINK/ACT**	
	---		---		---	
System -defined variables	**Variable**		**Data type**		**Name**	
	None		None		None	
Cause and correction	**Assumed cause**		**Correction**		**Prevention**	
	The multi-rotation counter of the absolute encoder was cleared		This operation is performed for safety and is not an error.		A preventative measure is not required because this is a safety measure.	
Attached information	None					
Precautions/ Remarks	AL status code: -, Error No.: 2701 hex					

Event name	Capacitor Lifetime Warning			**Event code**	081C0000 hex	
Meaning	The capacitor built into the Servo Drive reached the service life of the manufacturer's guarantee.					
Source	EtherCAT Master Function Module		**Source details**	Slave	**Detection timing**	Continuously
Error attributes	**Level**	Observation*1	**Recovery**	---	**Log category**	System log
Effects	**User program**	Continues.	**Operation**	Not affected.		
Indicators	**EtherCAT NET RUN**		**EtherCAT NET ERR**		**EtherCAT LINK/ACT**	
	---		---		---	
System -defined variables	**Variable**		**Data type**		**Name**	
	None		None		None	
Cause and correction	**Assumed cause**		**Correction**		**Prevention**	
	The operating time of the capacitor in the Servo Drive exceeded the service life		Send the Servo Drive for repair or replace the Servo Drive with a new one. It is necessary to replace the component that reached the service life.		None	
Attached information	None					
Precautions/ Remarks	AL status code: -, Error No.: A701 hex					

*1. You can change the level to minor fault by using Warning Level Change 1 Selection (4020-05 hex).

Event name	Inrush Current Prevention Relay Lifetime Warning			**Event code**	081D0000 hex	
Description	The inrush current prevention relay built into the Servo Drive reached the service life of the manufacturer's guarantee.					
Source	EtherCAT Master Function Module		**Source details**	Slave	**Detection timing**	Continuously
Error attributes	**Level**	Observation*1	**Recovery**	---	**Log category**	System log
Effects	**User program**	Continues.	**Operation**	Not affected.		
Indicators	**EtherCAT NET RUN**		**EtherCAT NET ERR**		**EtherCAT LINK/ACT**	
	---		---		---	
System -defined variables	**Variable**		**Data type**		**Name**	
	None		None		None	
Cause and correction	**Assumed cause**		**Correction**		**Prevention**	
	The number of operating times of the inrush current prevention relay in the Servo Drive exceeded the service life		Send the Servo Drive for repair or replace the Servo Drive with a new one. It is necessary to replace the component that reached the service life.		None	
Attached information	None					
Precautions/ Remarks	AL status code: -, Error No.: A702 hex					

*1. You can change the level to minor fault by using Warning Level Change 1 Selection (4020-05 hex).

Event name	Encoder Lifetime Warning			**Event code**	0847 0000 hex	
Description	The encoder lifetime is close to the end.					
Source	EtherCAT Master Function Module		**Source details**	Slave	**Detection timing**	Continuously
Error attributes	**Level**	Observation*1	**Recovery**	---	**Log category**	System log
Effects	**User program**	Continues.	**Operation**	Not affected.		
Indicators	**EtherCAT NET RUN**		**EtherCAT NET ERR**		**EtherCAT LINK/ACT**	
	---		---		---	
System -defined variables	**Variable**		**Data type**		**Name**	
	None		None		None	
Cause and correction	**Assumed cause**		**Correction**		**Prevention**	
	Temporary noise		If this event occurs repeatedly, the lifetime is close to the end. Replace the motor.		None	
	The end of the encoder life					
Attached information	None					
Precautions/ Remarks	AL status code: -, Error No.: A706 hex					

*1. You can change the level to minor fault by using Warning Level Change 1 Selection (4020-05 hex).

Event name	Fan Rotation Warning			**Event code**	084C 0000 hex	
Description	The rotation speed of the fan is 80% or less of the rating and the cooling performance decreases.					
Source	EtherCAT Master Function Module		**Source details**	Slave	**Detection timing**	Continuously
Error attributes	**Level**	Observation*1	**Recovery**	---	**Log category**	System log
Effects	**User program**	Continues.	**Operation**	Not affected.		
Indicators	**EtherCAT NET RUN**		**EtherCAT NET ERR**		**EtherCAT LINK/ACT**	
	---		---		---	
System -defined variables	**Variable**		**Data type**		**Name**	
	None		None		None	
Cause and correction	**Assumed cause**		**Correction**		**Prevention**	
	There is a foreign matter in the cooling fan and it blocks the rotation		Check whether there is a foreign matter in the fan. If you find a foreign matter, remove it.		Do not use the fan in an area surrounded by excessive foreign matter. Also, do not allow foreign matter to enter.	
	Cooling fan failure		If there is no improvement after you performed the correction above, replace the Servo Drive.			
Attached information	None					
Precautions/ Remarks	AL status code: -, Error No.: A300 hex					

*1. You can change the level to minor fault by using Warning Level Change 1 Selection (4020-05 hex).

Event name	Absolute Encoder Counter Overflow Warning			**Event code**	084E0000 hex	
Description	The multi-rotation counter of the encoder exceeded the value set in **Encoder - Absolute Encoder Counter Overflow Warning Level** (4510-02 hex).					
Source	EtherCAT Master Function Module		**Source details**	Slave	**Detection timing**	Continuously
Error attributes	**Level**	Observation*1	**Recovery**	---	**Log category**	System log
Effects	**User program**	Continues.	**Operation**	Not affected.		
Indicators	**EtherCAT NET RUN**		**EtherCAT NET ERR**		**EtherCAT LINK/ACT**	
	---		---		---	
System -defined variables	**Variable**		**Data type**		**Name**	
	None		None		None	
Cause and correction	**Assumed cause**		**Correction**		**Prevention**	
	An inappropriate value was set in the **Encoder** – **Operation Selection when Using Absolute Encoder** (4510-01 hex)		Set an appropriate value in the **Encoder - Operation Selection when Using Absolute Encoder** (4510-01 hex).		Set an appropriate value in the **Encoder - Operation Selection when Using Absolute Encoder** (4510-01 hex).	
	The multi-rotation number of the encoder exceeded the warning level		Set the travel distance so that the multi-rotation number does not exceed the value set in the **Encoder - Absolute Encoder Counter Overflow Warning Level** (4510-02 hex).		Set the travel distance so that the multi-rotation number does not exceed the value set in the **Encoder - Absolute Encoder Counter Overflow Warning Level** (4510-02 hex).	
Attached information	None					
Precautions/ Remarks	AL status code: -, Error No.: AB00 hex					

*1. You can change the level to minor fault by using Warning Level Change 1 Selection (4020-05 hex).

Event name	Safety Relay Lifetime Warning			**Event code**	08770000 hex	
Description	A safety relay for SBC reached the lifetime counting.					
Source	EtherCAT Master Function Module		**Source details**	Slave	**Detection timing**	Continuously
Error attributes	**Level**	Observation*1	**Recovery**	---	**Log category**	System log
Effects	**User program**	Continues.	**Operation**	Not affected.		
Indicators	**EtherCAT NET RUN**		**EtherCAT NET ERR**		**EtherCAT LINK/ACT**	
	---		---		---	
System -defined variables	**Variable**		**Data type**		**Name**	
	None		None		None	
Cause and correction	**Assumed cause**		**Correction**		**Prevention**	
	Use numbers of safety relay for SBC surpassed **Safety Relay Lifetime Warning Detection Thresholds**.		• Check Safety Relay Lifetime Warning Detection Threshold and set an appropriate value. • After replacing safety relay for SBC, clear the Safety Relay ON Count.		Check the specified value of safety relay for SBC and set an appropriate value of Safety Relay Lifetime Warning Detection Threshold.	
Attached information	None					
Precautions/ Remarks	AL status code: -, Error No.: A70C hex					

*1. You can change the level to minor fault by using Warning Level Change 1 Selection (4020-05 hex).

Event name	Lifetime Information Corruption Warning			**Event code**	18390000 hex	
Description	An error was detected in the saved lifetime information.					
Source	EtherCAT Master Function Module		**Source details**	Slave	**Detection timing**	At power ON
Error attributes	**Level**	Observation*1	**Recovery**	---	**Log category**	System log
Effects	**User program**	Continues.	**Operation**	Not affected.		
Indicators	**EtherCAT NET RUN**		**EtherCAT NET ERR**		**EtherCAT LINK/ACT**	
	---		---		---	
System -defined variables	**Variable**		**Data type**		**Name**	
	None		None		None	
Cause and correction	**Assumed cause**		**Correction**		**Prevention**	
	The lifetime information corruption was detected when the power supply was turned ON		Perform the Lifetime Information Clear. Note that the lifetime may not be detected correctly after the clear operation because the value of lifetime information is cleared. If this event occurs repeatedly, the area to save lifetime information is faulty. Replace the Servo Drive.		None	
Attached information	None					
Precautions/ Remarks	AL status code: -, Error No.: A705 hex					

*1. You can change the level to minor fault by using Warning Level Change 1 Selection (4020-05 hex).

Event name	Data Setting Warning			**Event code**	34E00000 hex	
Description	The object set value is out of the range.					
Source	EtherCAT Master Function Module		**Source details**	Slave	**Detection timing**	Continuously
Error attributes	**Level**	Observation*1	**Recovery**	---	**Log category**	System log
Effects	**User program**	Continues.	**Operation**	Not affected.		
Indicators	**EtherCAT NET RUN**		**EtherCAT NET ERR**		**EtherCAT LINK/ACT**	
	---		---		---	
System -defined variables	**Variable**		**Data type**		**Name**	
	None		None		None	
Cause and correction	**Assumed cause**		**Correction**		**Prevention**	
	The object set value is out of the range		Correct the object setting to be within the specified range.		Correct the object setting to be within the specified range.	
Attached information	None					
Precautions/ Remarks	AL status code: -, Error No.: B000 hex					

*1. You can change the level to minor fault by using Warning Level Change 1 Selection (4020-05 hex).

Event name	Overload Warning			**Event code**	387A0000 hex	
Description	The Load Ratio of Servo Drive or motor (4150-81 hex) exceeded the level set in the **Overload - Warning Notification Level** (4150-01 hex).					
Source	EtherCAT Master Function Module		**Source details**	Slave	**Detection timing**	Continuously
Error attributes	**Level**	Observation*1	**Recovery**	---	**Log category**	System log
Effects	**User program**	Continues.	**Operation**	Not affected.		
Indicators	**EtherCAT NET RUN**		**EtherCAT NET ERR**		**EtherCAT LINK/ACT**	
	---		---		---	
System -defined variables	**Variable**		**Data type**		**Name**	
	None		None		None	
Cause and correction	**Assumed cause**		**Correction**		**Prevention**	
	Operation was continued for a long time with high load.		Perform the following corrections accordingly. • Increase the set value of the acceleration/deceleration time and the stop time. • Lighten the load. • Adjust the gain or inertia ratio. • If torque waveforms oscillate excessively, adjust the system by the tuning so that the oscillation does not occur. • Set the appropriate brake timing. • Increase the capacities of the Servo Drive and the motor.		Check the items given for corrections in advance and take countermeasures as required.	
	There is incorrect wiring of the motor cable or a broken cable		• Connect the motor cable as shown in the wiring diagram. If the cable is broken, replace it. Or, connect the motor cable and encoder cable that are used together to the same motor. • Measure the voltage at the brake terminal. If the brake is applied, release it.		Connect the motor cable as shown in the wiring diagram. Connect the motor cable and encoder cable/external encoder cable that are used together to the same motor.	
	Increase in friction		Check machine conditions and remove the cause of the friction.		Take countermeasures so that machine distortion is not generated.	
Attached information	Attached Information 1: Cause Details 1: The Servo Drive is overloaded 2: The Servomotor is overloaded					
Precautions/ Remarks	AL status code: -, Error No.: A000 hex					

*1. You can change the level to minor fault by using Warning Level Change 1 Selection (4020-05 hex).

Event name	Regeneration Overload Warning			**Event code**	387D 0000 hex	
Description	The **Regeneration Load Ratio** (4310-81 hex) exceeded 85% of the regeneration overload ratio.					
Source	EtherCAT Master Function Module		**Source details**	Slave	**Detection timing**	Continuously
Error attributes	**Level**	Observation*1	**Recovery**	---	**Log category**	System log
Effects	**User program**	Continues.	**Operation**	Not affected.		
Indicators	**EtherCAT NET RUN**		**EtherCAT NET ERR**		**EtherCAT LINK/ACT**	
	---		---		---	
System -defined variables	**Variable**		**Data type**		**Name**	
	None		None		None	
Cause and correction	**Assumed cause**		**Correction**		**Prevention**	
	The regeneration processing is set inappropriately		Check the regeneration processing setting, and set the same value as the resistance value of the Regeneration Resistor in use.		Check the items given for corrections in advance and take countermeasures as required.	
	The Regeneration Resistor is selected inappropriately		Check the operation pattern by the velocity monitor. Check the load ratio of Regeneration Resistor, and perform the following corrections accordingly. • Increase the deceleration time and stopping time. • Decrease the command velocity to the motor. • Use an External Regeneration Resistor. • Increase the capacities of the Servo Drive and the motor.			
	The Regeneration Resistor is used for continuous regenerative braking		The Regeneration Resistor cannot be used for continuous regenerative braking.		Do not use the Regeneration Resistor for continuous regenerative braking.	
	The applied power supply voltage is higher than the specified value		Apply the power supply voltage to be the specified value.		Review the power supply voltage to be the specified value before use.	
	Regeneration Resistor failure		Check whether the Regeneration Resistor is faulty, and use one without failures.		Confirm that the Regeneration Resistor is not faulty before use.	
Attached information	None					
Precautions/ Remarks	AL status code: -, Error No.: A100 hex					

*1. You can change the level to minor fault by using Warning Level Change 1 Selection (4020-05 hex).

Event name	Motor Vibration Warning			**Event code**	387E 0000 hex	
Description	The motor vibration, which was higher than or equal to the level set in the **Vibration Detection - Detection Level** (3B70-01 hex), was detected.					
Source	EtherCAT Master Function Module		**Source details**	Slave	**Detection timing**	During Servo ON
Error attributes	**Level**	Observation*1	**Recovery**	---	**Log category**	System log
Effects	**User program**	Continues.	**Operation**	Not affected.		
Indicators	**EtherCAT NET RUN**		**EtherCAT NET ERR**		**EtherCAT LINK/ACT**	
	---		---		---	
System -defined variables	**Variable**		**Data type**		**Name**	
	None		None		None	
Cause and correction	**Assumed cause**		**Correction**		**Prevention**	
	The control parameter is set inappropriately		Set the control parameters such as inertia ratio, gain, and filter to appropriate values by gain tuning or manually.		Set and use the appropriate control parameter.	
	The rigidity decreased due to mechanical looseness or wear		Check whether the mechanical system is not loose and secure it firmly. If the rigidity of mechanical system is changed, adjust the control parameter again.		Secure the mechanical system firmly without the looseness.	
Attached information	None					
Precautions/ Remarks	AL status code: -, Error No.: A600 hex					

*1. You can change the level to minor fault by using Warning Level Change 1 Selection (4020-05 hex).

Event name	Command Warning			**Event code**	78220000 hex	
Meaning	A command could not be executed.					
Source	EtherCAT Master Function Module		**Source details**	Slave	**Detection timing**	Continuously
Error attributes	**Level**	Observation*1	**Recovery**	---	**Log category**	System log
Effects	**User program**	Continues.	**Operation**	Not affected.		
Indicators	**EtherCAT NET RUN**		**EtherCAT NET ERR**		**EtherCAT LINK/ACT**	
	---		---		---	
System -defined variables	**Variable**		**Data type**		**Name**	
	None		None		None	
Cause and correction	**Assumed cause**		**Correction**		**Prevention**	
	The *Switch on* command was received		Send the *Switch on* command with the main circuit power supply ON.		Use the Servo Drive after confirming the corrections that are given on the left.	
	The *Enable operation* command was received		Send the *Enable operation* command under the following conditions. • In supported operation mode • The motor rotation speed is 30 r/min or less. • In the free-run mode, the interpolation time period is the integral multiple of the communications cycle.			
	An operation command in the prohibition direction was received after the immediate stop by the Drive Prohibition Input or Software Position Limit		Check status of the Drive Prohibition Input and Software Position Limit by the Digital inputs, Statusword, and Software Position Limit. Then, do not issue the command in the drive prohibition direction.			
	Homing started		Set a supported number of the Homing method for homing. Start homing at the timing of when homing is not performed.			
	The positioning start command was received in the Profile position mode		Set a supported value for bit 5 and 6 in the Controlword.			
Attached information	None					
Precautions/ Remarks	AL status code: -, Error No.: B100 hex					

*1. You can change the level to minor fault by using Warning Level Change 3 Selection (4020-07 hex).

Event name	EtherCAT Communications Warning			**Event code**	84B00000 hex	
Description	An EtherCAT communications error occurred more than one time.					
Source	EtherCAT Master Function Module		**Source details**	Slave	**Detection timing**	Continuously
Error attributes	**Level**	Observation*1	**Recovery**	---	**Log category**	System log
Effects	**User program**	Continues.	**Operation**	Not affected.		
Indicators	**EtherCAT NET RUN**		**EtherCAT NET ERR**		**EtherCAT LINK/ACT**	
	---		---		---	
System -defined variables	**Variable**		**Data type**		**Name**	
	None		None		None	
Cause and correction	**Assumed cause**		**Correction**		**Prevention**	
	An EtherCAT communications cable is disconnected, broken, short-circuited, or has a contact failure in a daisy chain configuration.		Connect the EtherCAT communications cable securely. If the cable is broken, replace it.		Confirm that the EtherCAT communications cable is not broken before use, and connect it securely.	
	• In a ring topology configuration, the ring disconnection status occurred. • In a ring topology configuration, the ring disconnection status was fixed.		Refer to *13-4 Method for Ring Disconnection Maintenance and Inspection* on page 13-5 and perform inspection.			
	Noise		Take noise countermeasures so that the noise does not affect the EtherCAT communications cable.		Take noise countermeasures so that the noise does not affect the EtherCAT communications cable.	
	Failure of the EtherCAT physical layer of a Servo Drive		If this event occurs again after you performed all corrections shown above, replace the Servo Drive.		None	
Attached information	None					
Precautions/ Remarks	AL status code: -, Error No.: B200 hex					

*1. You can change the level to minor fault by using Warning Level Change 3 Selection (4020-07 hex).

Event name	Unit Restarted			**Event code**	90A00000 hex	
Description	Restart was performed.					
Source	EtherCAT Master Function Module		**Source details**	Slave	**Detection timing**	Operation by user
Error attributes	**Level**	Information	**Recovery**	---	**Log category**	System log
Effects	**User program**	Continues.	**Operation**	Not affected.		
Indicators	**EtherCAT NET RUN**		**EtherCAT NET ERR**		**EtherCAT LINK/ACT**	
	---		---		---	
System -defined variables	**Variable**		**Data type**		**Name**	
	None		None		None	
Cause and correction	**Assumed cause**		**Correction**		**Prevention**	
	Restart was performed		---		---	
Attached information	None					
Precautions/ Remarks	AL status code: 8000 hex, Error No.: -					

Event name	Memory All Cleared			**Event code**	98220000 hex	
Meaning	The Unit setting was cleared.					
Source	EtherCAT Master Function Module		**Source details**	Slave	**Detection timing**	Operation by user
Error attributes	**Level**	Information	**Recovery**	---	**Log category**	System log
Effects	**User program**	Continues.	**Operation**	Not affected.		
Indicators	**EtherCAT NET RUN**		**EtherCAT NET ERR**		**EtherCAT LINK/ACT**	
	---		---		---	
System -defined variables	**Variable**		**Data type**		**Name**	
	None		None		None	
Cause and correction	**Assumed cause**		**Correction**		**Prevention**	
	Clear All Memory was performed		---		---	
Attached information	None					
Precautions/ Remarks	AL status code: -, Error No.: -					

Event name	Motor Rotation Direction Selection Non-conformity			**Event code**	98230000 hex	
Meaning	Discrepancy of **Motor Rotation Direction Selection** and **Safety Motor Rotation Direction Selection** was detected.					
Source	EtherCAT Master Function Module		**Source details**	Slave	**Detection timing**	When establishing FSoE communications
Error attributes	**Level**	Information	**Recovery**	---	**Log category**	System log
Effects	**User program**	Continues.	**Operation**	Not affected.		
Indicators	**EtherCAT NET RUN**		**EtherCAT NET ERR**		**EtherCAT LINK/ACT**	
	---		---		---	
System -defined variables	**Variable**		**Data type**		**Name**	
	None		None		None	
Cause and correction	**Assumed cause**		**Correction**		**Prevention**	
	Motor rotatoin settings are different between **Motor Rotation Direction Selection** and **Safety Motor Rotation Direction Selection**.		When different direction of the motor rotation is set intentionally, use the motor as it is.		None	
			When different direction of the motor rotation is set unintentionally, adjust the motor rotation direction to the same direction.		Set the motor rotation direction to **Motor Rotation Direction Selection** and **Safety Motor Rotation Direction Selection** according to user's system.	
Attached information	None					
Precautions/ Remarks	AL status code: -, Error No.: -					

Event name	Event Log Cleared			**Event code**	98240000 hex	
Meaning	The event log was cleared.					
Source	EtherCAT Master Function Module		**Source details**	Slave	**Detection timing**	Operation by user
Error attributes	**Level**	Information	**Recovery**	---	**Log category**	System log
Effects	**User program**	Continues.	**Operation**	Not affected.		
Indicators	**EtherCAT NET RUN**		**EtherCAT NET ERR**		**EtherCAT LINK/ACT**	
	---		---		---	
System -defined variables	**Variable**		**Data type**		**Name**	
	None		None		None	
Cause and correction	**Assumed cause**		**Correction**		**Prevention**	
	Clear Event Log was performed		---		---	
Attached information	None					
Precautions/ Remarks	AL status code: -, Error No.: -					

Event name	STO Detected			**Event code**	98250000 hex	
Meaning	The safety input OFF state was detected via the safety input signal or EtherCAT communications.					
Source	EtherCAT Master Function Module		**Source details**	Slave	**Detection timing**	Continuously
Error attributes	**Level**	Information	**Recovery**	---	**Log category**	System log
Effects	**User program**	Continues.	**Operation**	Power drive circuit is OFF		
Indicators	**EtherCAT NET RUN**		**EtherCAT NET ERR**		**EtherCAT LINK/ACT**	
	---		---		---	
System -defined variables	**Variable**		**Data type**		**Name**	
	None		None		None	
Cause and correction	**Assumed cause**		**Correction**		**Prevention**	
	There are detached wires and the disconnection of safety input cable.		Connect the input wiring of safety inputs 1 and 2 and safety input unit again. If the cable is disconnected, replace the cable with new one.		Connect the input cables for safety inputs 1, 2 and safety input unit.	
	Incorrect safety programming of safety controller.		Reconsider safety program.		Carry out the operation under sufficient verification of safety program.	
	Torque off request was detected at safety input signal.		After safety check, search the cause and resolve the problems.		Create the surrounding environment based on the cause that the safety input signals of safety input 1 or 2 are turned OFF.	
	Torque off request was detected by commands via EtherCAT communication.				Create the surrounding environment based on the cause that the safety input signals of safety input unit are turned OFF.	
Attached information	Attached information 1: Cause details 1: STO status was detected via safety input signal. 2: STO status was detected by a command via EtherCAT communications.					
Precautions/ Remarks	AL status code: -, Error No.: C000 hex					

A-5 Use Case of Safety Function

A-5-1 Function to Stop Servomotor

Use case for stop function is described with SS1 function.

Application Image

When a safety light curtain detects a worker and an object, a standard controller decelerates/stops a Servomotor and a Servo Drive cuts off the output with SS1 function.

Device for Use

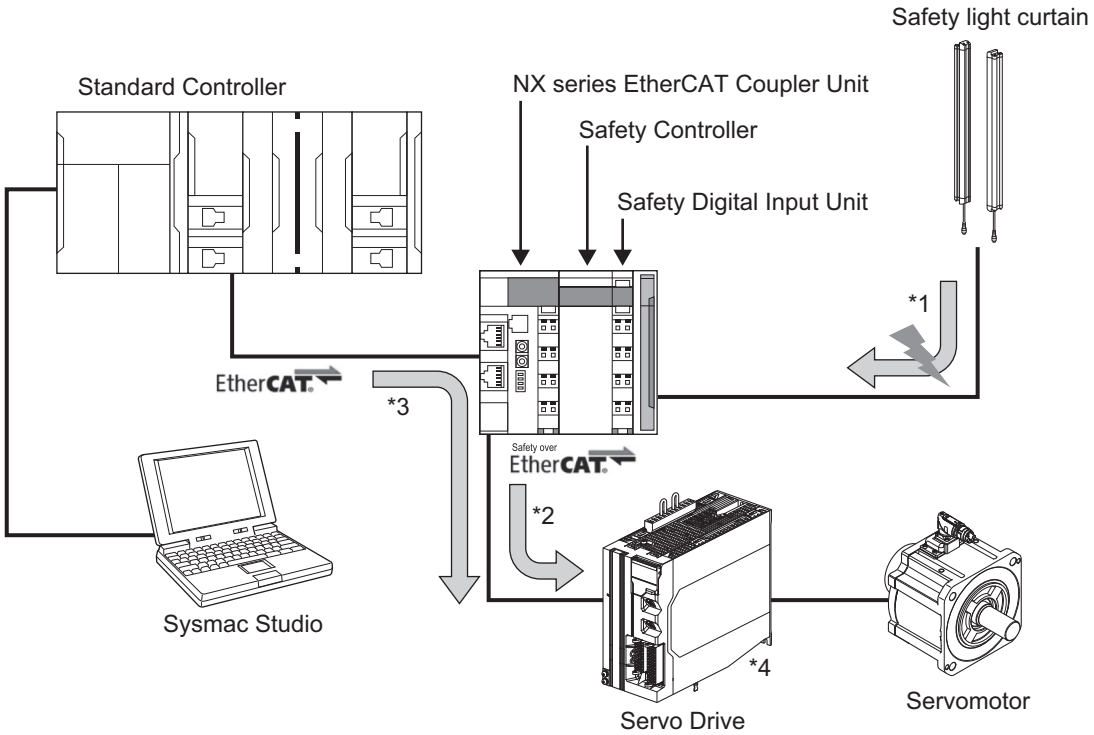

You secure Safety System when you use these devices to perform the following controls.

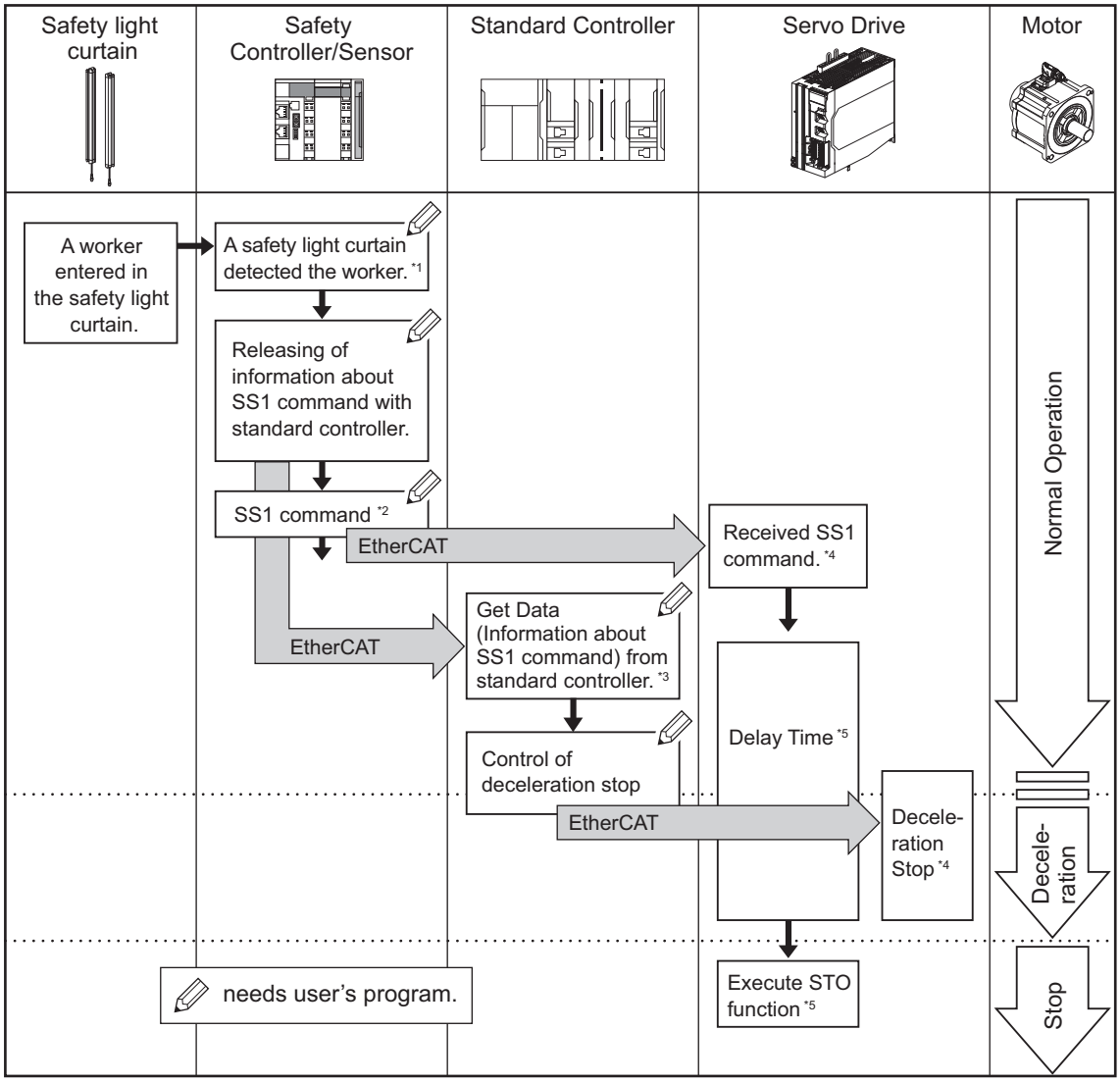

*1. A safety controller detects that a safety light curtain is pressed.

*2. The safety controller gives SS1 command to a Servo Drive.

*3. A standard controller reads data from the safety controller and confirms that the SS1 command was enabled. It gives command for stop of a Servomotor to a Servo Drive in order to decelerate/stop a Servomotor.

*4. A Servo Drive activates SS1 function after receiving SS1 command. At the same time, it follows the command from the standard controller to decelerate/stop the Servomotor.

*5. A Servo Drive goes into the STO status after delay time elapsed.

Wiring

Wire the safety light curtain and the emergency stop button switch to the digital input unit.

● NX-SID800

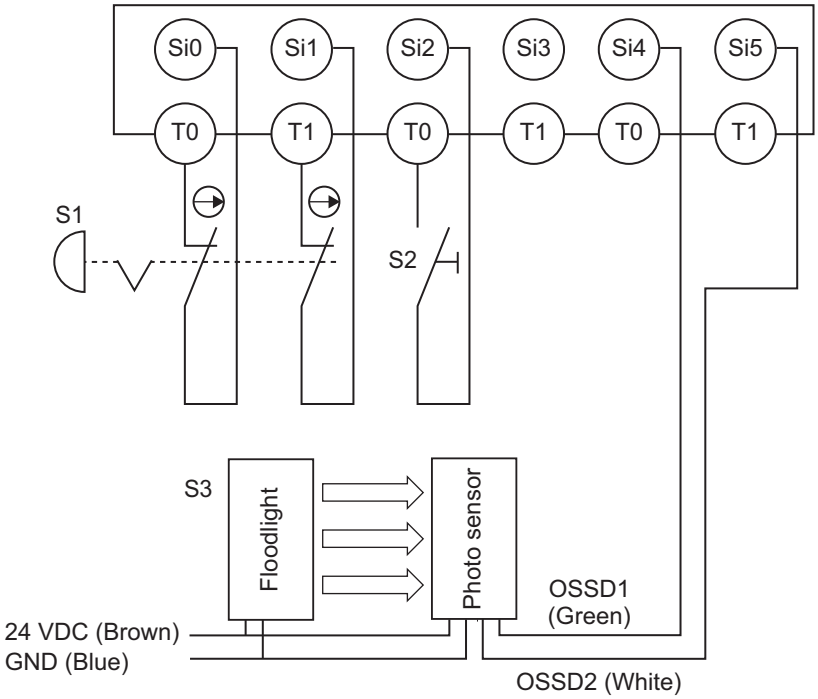

Operation Chart

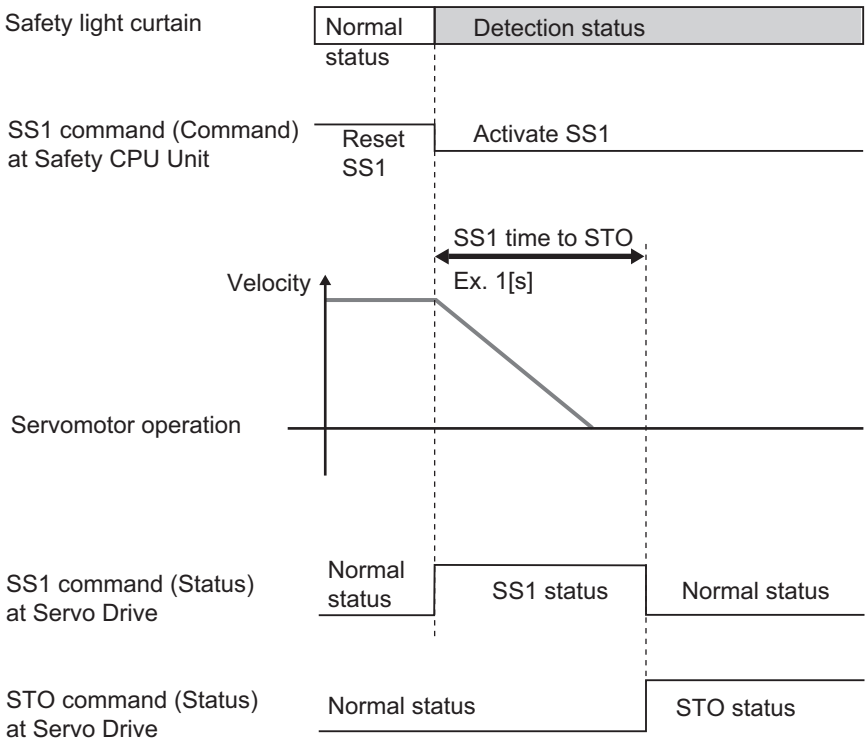

Configuration of EtherCAT Network

Edit EtherCAT network configuration.

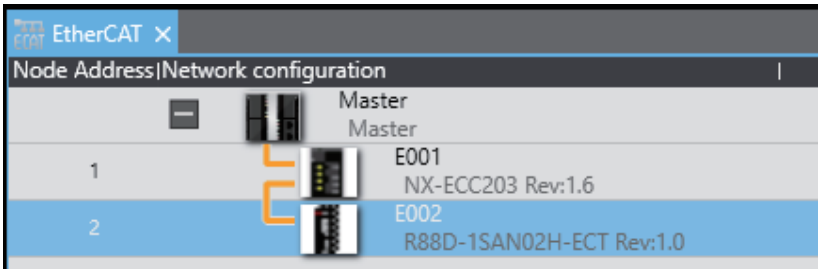

Edit the device configuration of coupler unit.

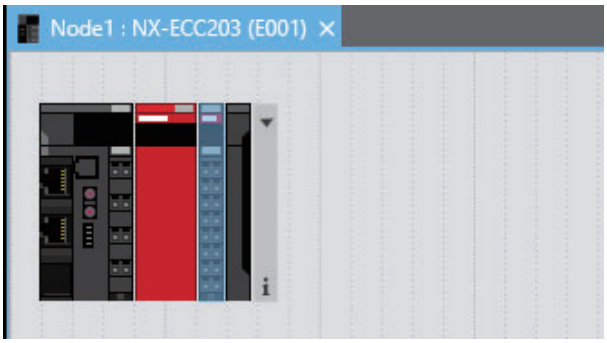

PDO Mapping

Confirm that object 1610 hex (17th receive PDO Mapping) and 1A10 hex (17th transmit PDO Mapping) are assigned to PDO mapping list of a Servo Drive.

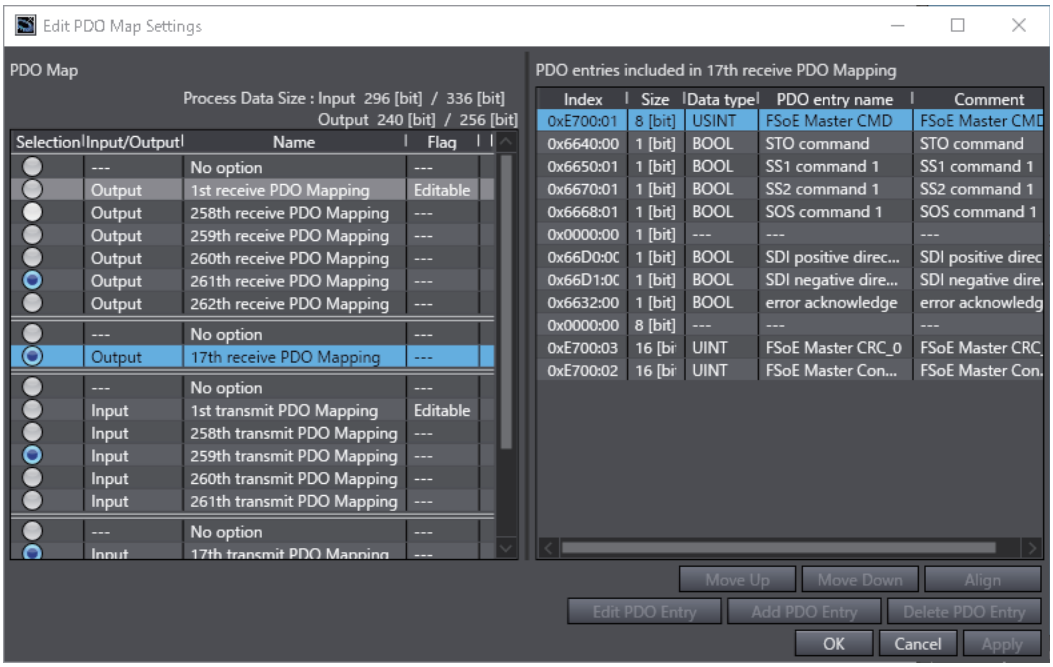

Select

of a safety controller with multi-view explorer.

Develop the Servo Drive of Safety I/O and double-click SRA parameter.

SS1 function is set with Safety Function Assignment Settings. Clear the check in the Enable box for non-use of safety functions.

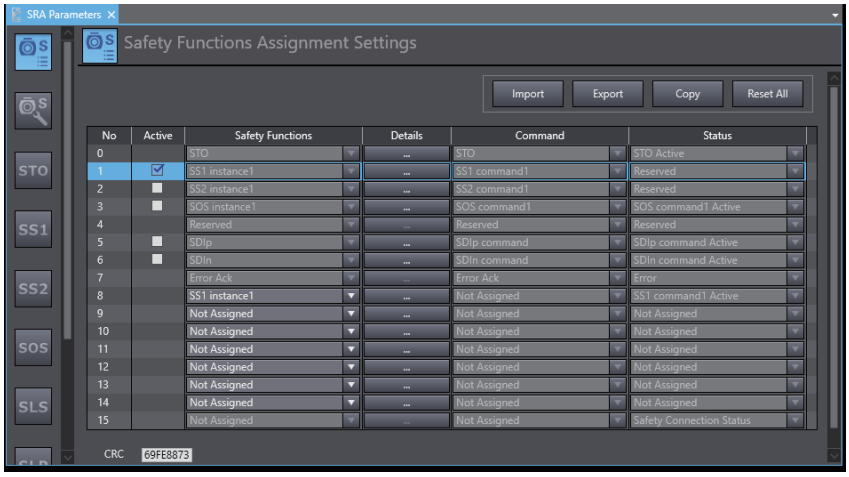

Setting of SS1 Function

Click 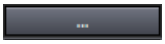

(detail) button for SS1 function selected at a screen of the Safety Functions Assignment Settings or click

(setting) SS1 function setting button to select instance numbers for the set SS1 function.

Set **SS1 time to STO** and **SS1 time for velocity zero**.

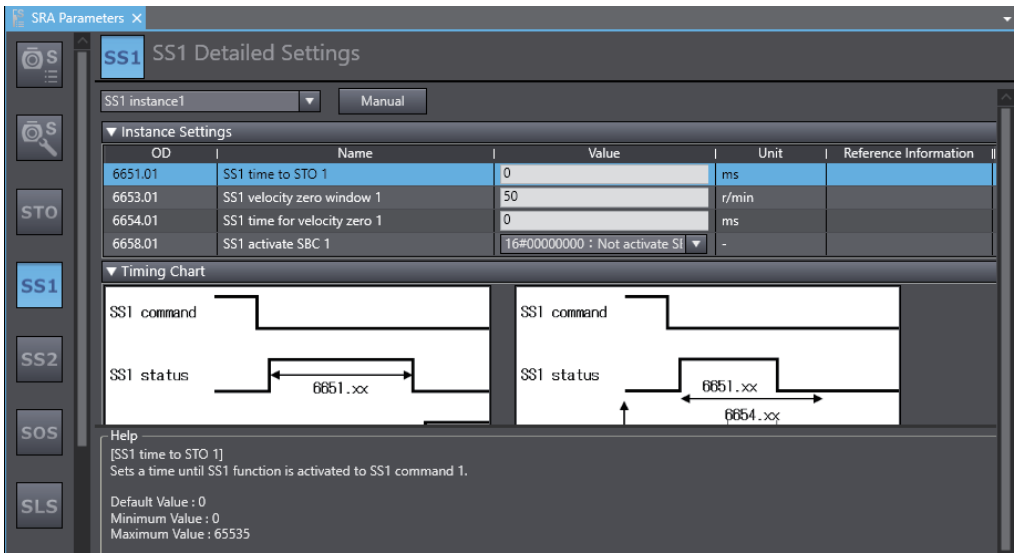

Safety Input Terminal Setting

Select

and open a screen of NX-SID800 setting to set input terminals.

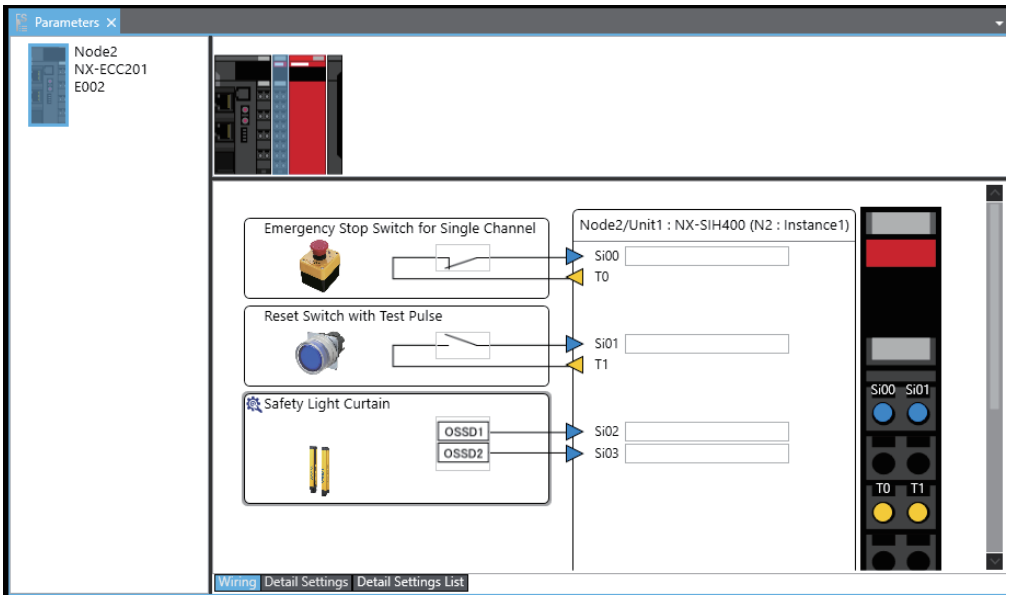

Safety I/O Map Setting

Select

to display I/O map. Edit variables.

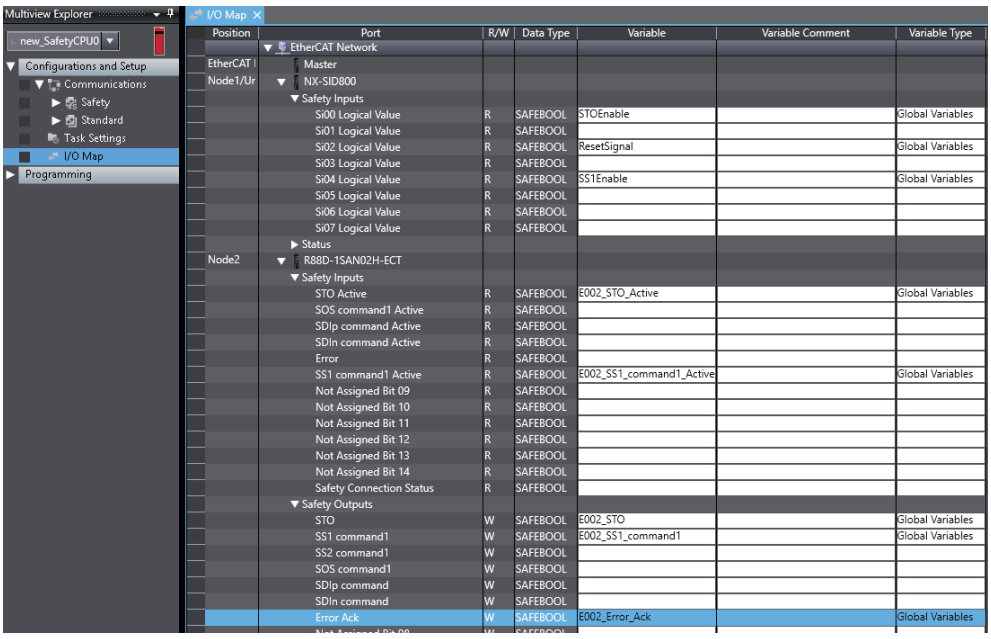

Safety Program

Open **Exposed Variables** and add variables with BOOL-type into Input to Safety CPU Unit.

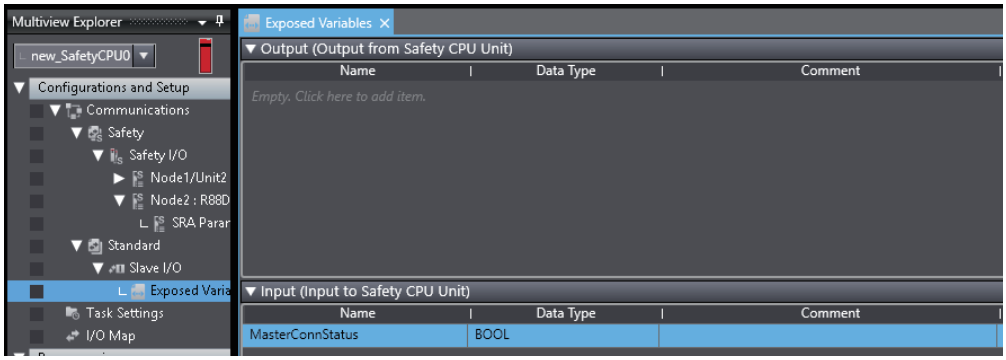

Select

to display an edit screen of safety program.

When a safety light curtain detects workers or objects enter to a specified area, a program to give a command for Activate SS1 to a Servo Drive is designed.*1

For the following figure, it shows an example that an emergency stop switch activates STO function independently.*2

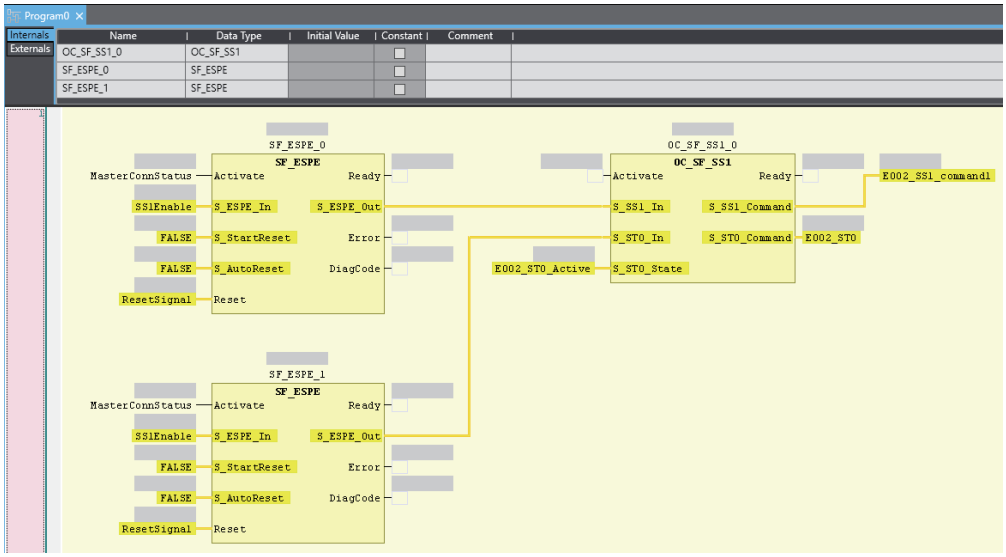

*1. For examples of the program, OC_SF_SS1 can be inserted from function blocks defined by users of the tool box or **Insert function blocks** in the Right-click menu. As for the programming procedure, refer to *NX-series Safety Control Unit User's Manual* (Cat. No. Z930).

*2. ResetSignal must be set up with reset switch ON before the operation start when the program is started up because S_StartReset is set to False.

Standard I/O Map Setting

A function selected at a screen of the Safety Functions Assignment Settings is displayed in **Mirror Safety statusword** of Servo Drive. Variables are created to bits where SS1 function was assigned.

I/O Map

Position	Port	Description	R/W	Data Type	Variable	Variable Comme	Variable Type
	EtherCAT Network Configuration						
Node1	NX-ECC201						
Node2	R88D-1SAN02H-ECT						
	Controlword	Controlword	W	WORD			
	Target position	Target position	W	DINT			
	Target velocity	Target velocity	W	DINT			
	Target torque	Target torque	W	INT			
	Modes of operation	Modes of operation	W	SINT			
	Touch probe function	Touch probe function	W	WORD			
	Max profile velocity	Max profile velocity	W	UDINT			
	Positive torque limit value	Positive torque limit value	W	UINT			
	Negative torque limit value	Negative torque limit value	W	UINT			
	Error code	Error code	R	WORD			
	Statusword	Statusword	R	WORD			
	Position actual value	Position actual value	R	DINT			
	Torque actual value	Torque actual value	R	INT			
	Modes of operation display	Modes of operation display	R	SINT			
	Touch probe status	Touch probe status	R	WORD			
	Touch probe pos1 pos value	Touch probe pos1 pos valu	R	DINT			
	Touch probe pos2 pos value	Touch probe pos2 pos valu	R	DINT			
	Digital inputs	Digital inputs	R	DWORD			
	Mirror Safety controlword	Mirror Safety controlword	R	UINT			
	STO command	Mirror Safety Controlword	R	BOOL	E002_STO_comma		Global Variables
	SS1 command 1	Mirror Safety Controlword	R	BOOL	E002_SS1_commar		Global Variables

Variables are created to Safety Master Connection Status of Safety CPU Unit and variables defined in Exposed Variables of Safety CPU.

I/O Map

Position	Port	Description	R/W	Data Type	Variable	Variable Comme	Variable Type
	EtherCAT Network Configuration						
Node1	NX-ECC201						
	Sysmac Error Status	Sysmac error status on Slav	R	BYTE			
	NX Unit Registration Status 125	Status whether the NX Unit	R	ARRAY[0..125			
	NX Unit I/O Data Active Status 125	Status whether the NX Unit	R	ARRAY[0..125			
Unit1	NX-SL3500						
	Safety CPU Status	Status of Safety CPU Unit fo	R	UINT			
	Normal Operating	Safety program is running	R	BOOL			
	Program Operating	Safety program is running	R	BOOL			
	Program No Fault	No system event more than	R	BOOL			
	Safety Master Connection Status	All safety master connectio	R	BOOL	N2_Safety_Master_		Global Variables
	MasterConnStatus		W	BOOL	N2_MasterConnSta		Global Variables
Unit2	NX-SID800						
Node2	R88D-1SAN02H-ECT						
	CPU/Expansion Racks						

Set so that Safety Master Connection Status can be read in the Safety CPU Program after you assign Safety Master Connection Status of Safety CPU Unit to Exposed Variables of Safety CPU in the standard program.

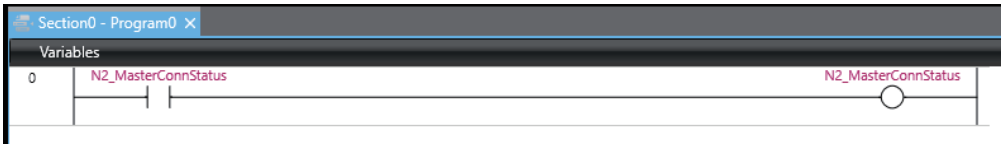

Standard Program

Sample Program

If *StartPg* is TRUE, check that the Servo Drive is ready.

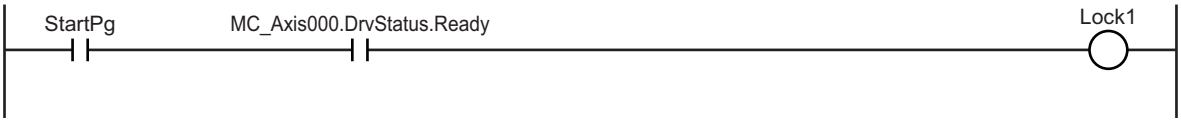

If the Servo Drive is ready, the Servo is turned ON.

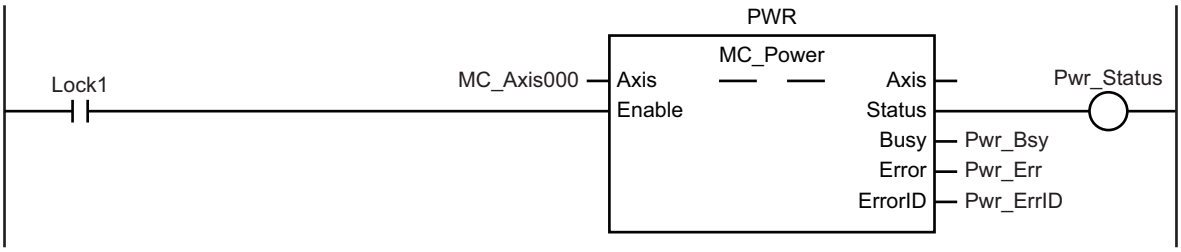

If a minor fault level error occurs for axis 1, the error handler for the device (FaultHandler) is executed.

Program the error handler (FaultHandler) according to the device.

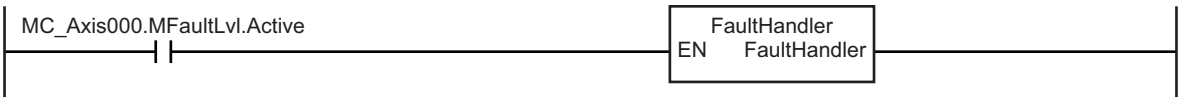

When *Sensor1* changes to TRUE, the MC_MoveVelocity (Velocity Control) instruction is executed.

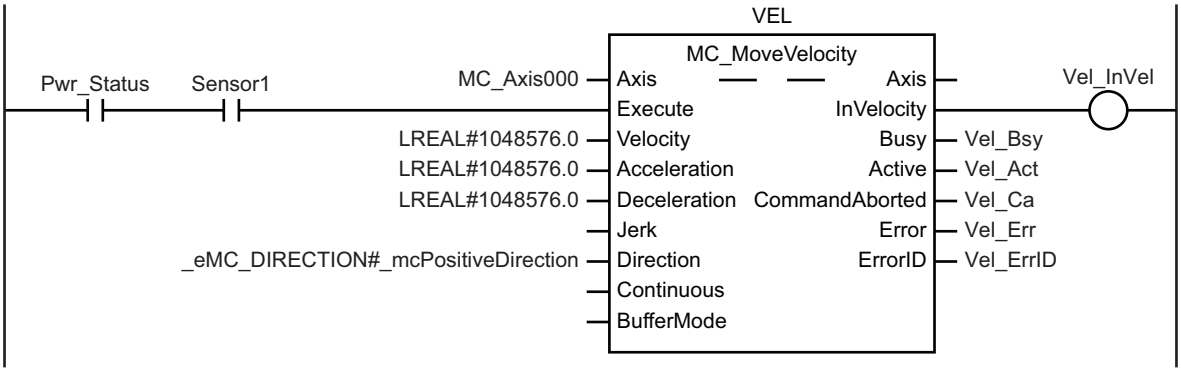

When the E002_SS1_command_1 changes to False, the MC_Stop (Forced Stop) instruction is executed.

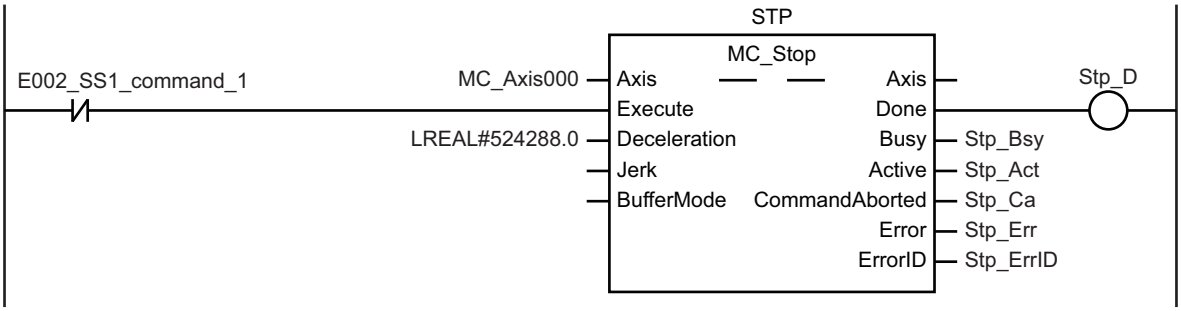

Check of Operation Program

Confirm that a designed program operates properly.

Open a data trace screen for a standard controller.

Click menu button to select **Add safety related trace target**.

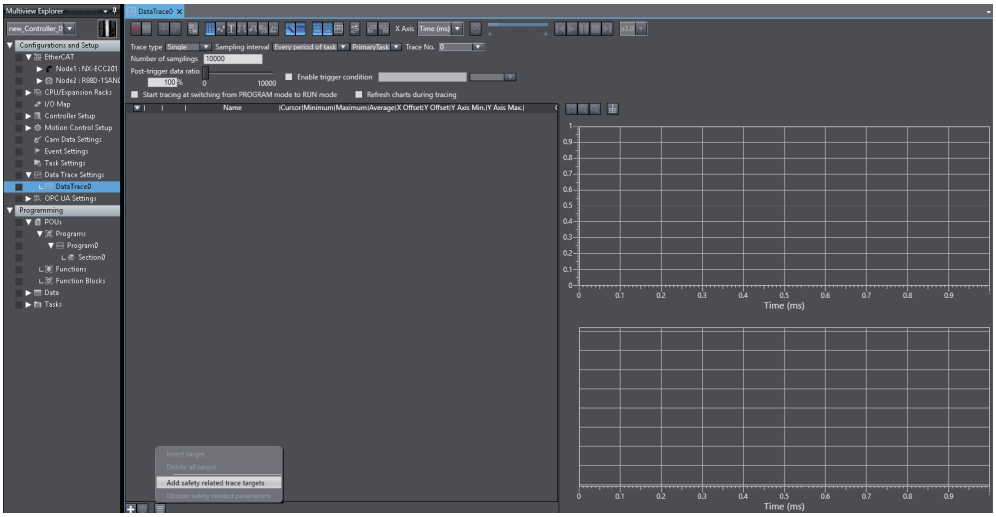

Select an axis to be traced and a safety function in option dialogue **Safety Related Trace Target Selection** and click **Extract** button, or add the trace targets separately and click **OK** button.

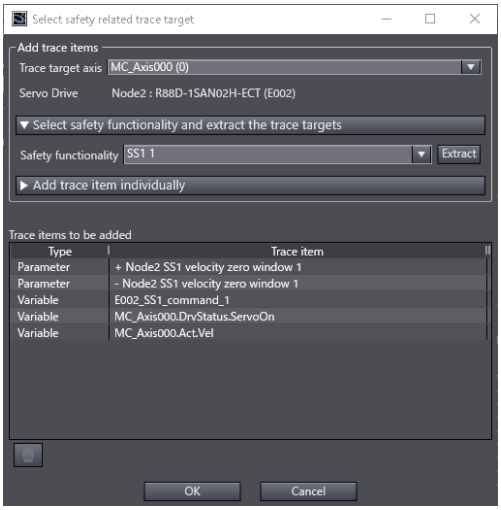

Execute the data trace. Check parameters for the set safety functions and observe the axis variables for trace target to confirm on whether safety functions are operated normally or not.

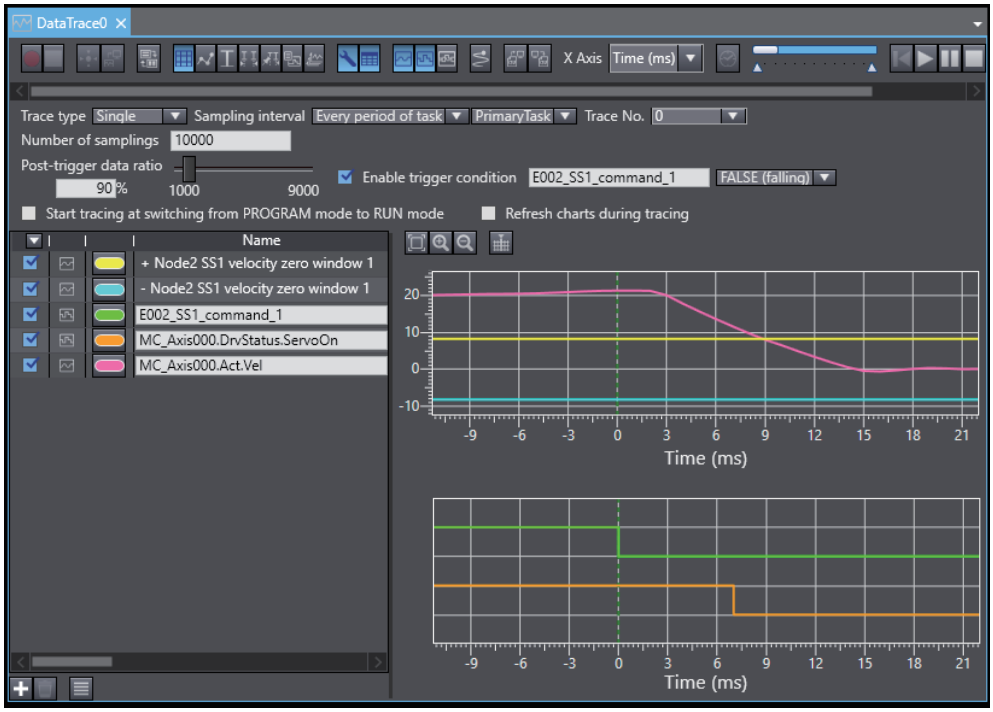

A-5-2 Monitoring Function

Monitoring function is described with SLS function.

Application Image

When you shift the key selector switch from an operation mode to a maintenance mode, a standard controller lets a Servomotor operate with low-speed operation and a Servo Drive monitors the motor velocity with SLS function.

Device for Use

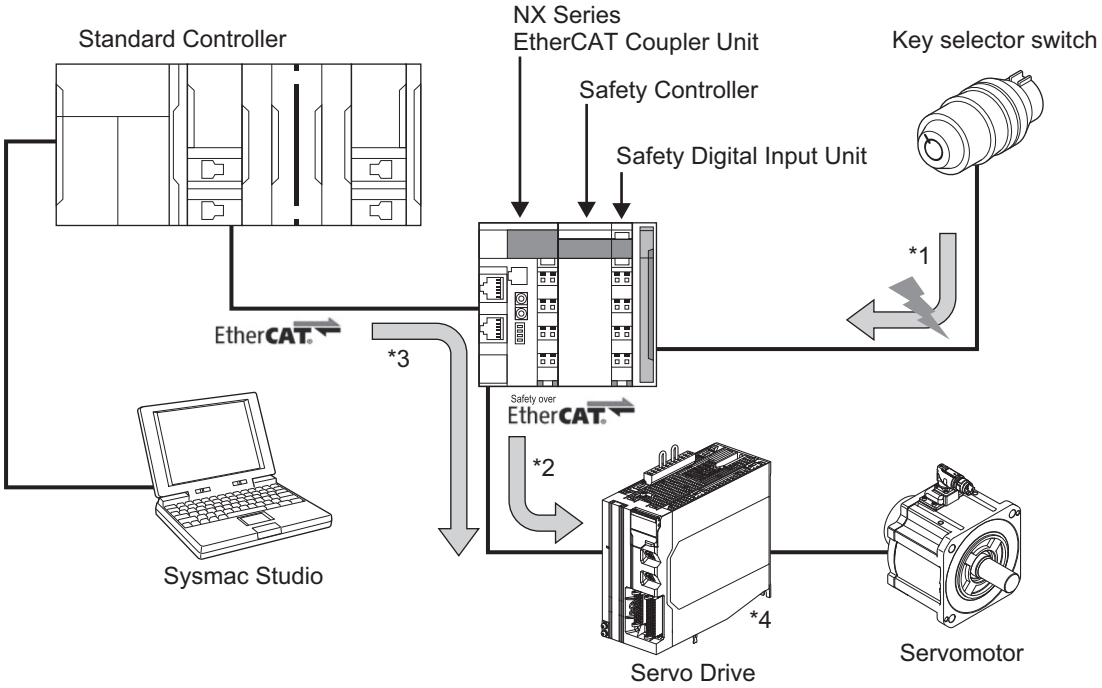

You secure Safety System when you use these devices to perform the following controls.

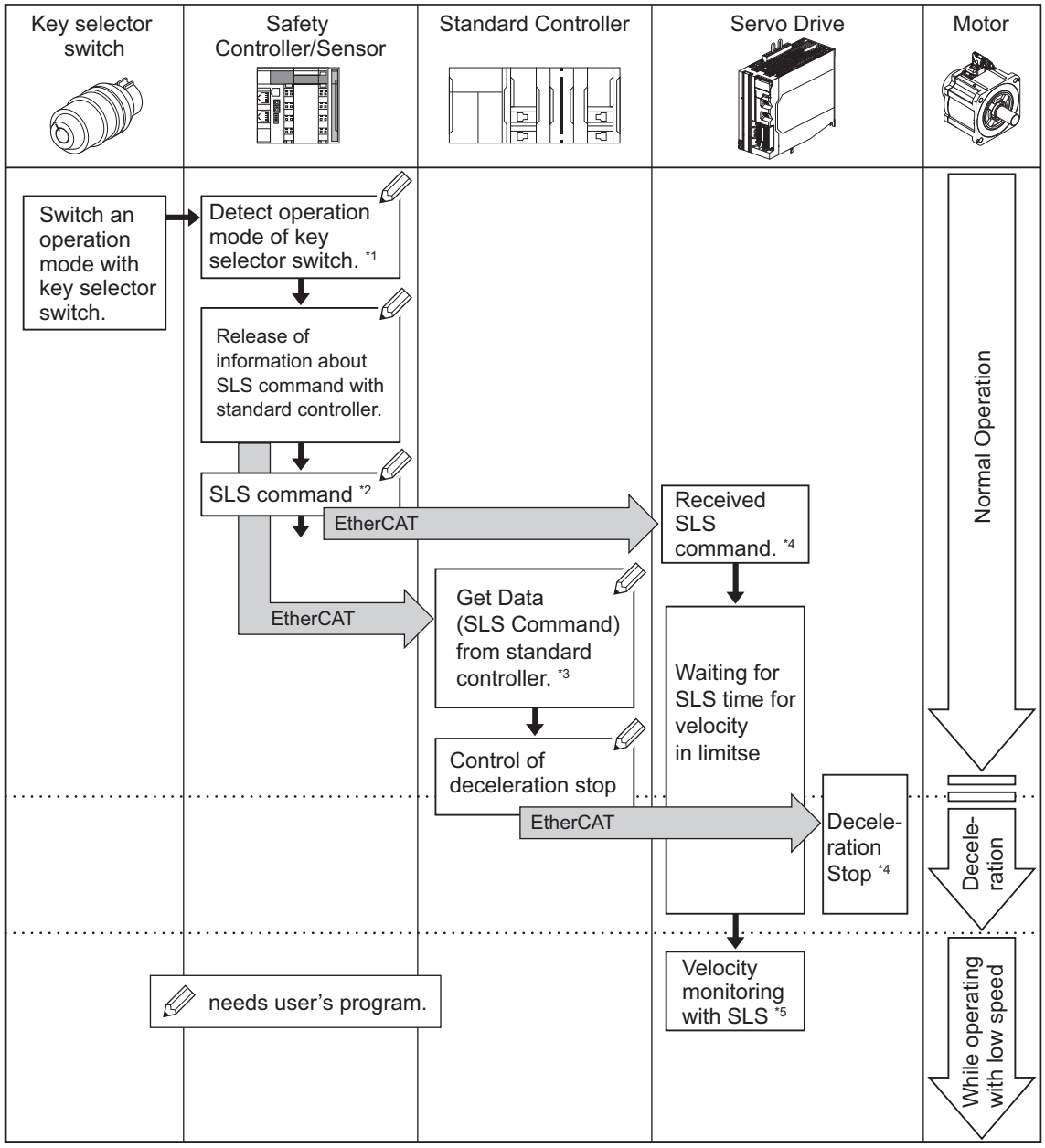

*1. A safety controller detects that an operation mode of a key selector switch is changed.

*2. The safety controller gives SLS command to a Servo Drive.

*3. A standard controller reads data from the safety controller and confirms that the SLS Command was enabled. It gives a command to a Servo Drive in order to decelerate a Servomotor.

*4. The Servo Drive activates SLS function after receiving SLS command. At the same time, it follows the command from the standard controller to decelerate/stop the Servomotor.

*5. A Servo Drive monitors that the Servomotor operates within the velocity limit.

Wiring

Wire a key selector switch to a Safety Digital Input Unit.

- **NX-SIH400**

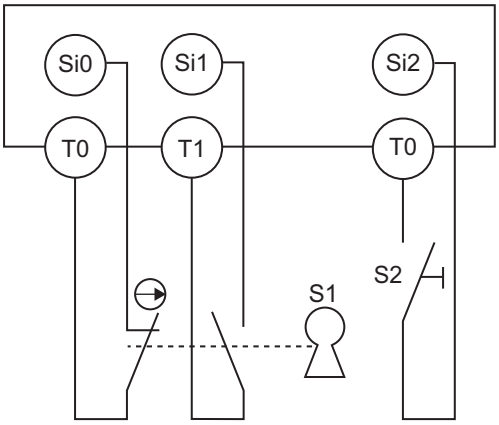

Operation Chart

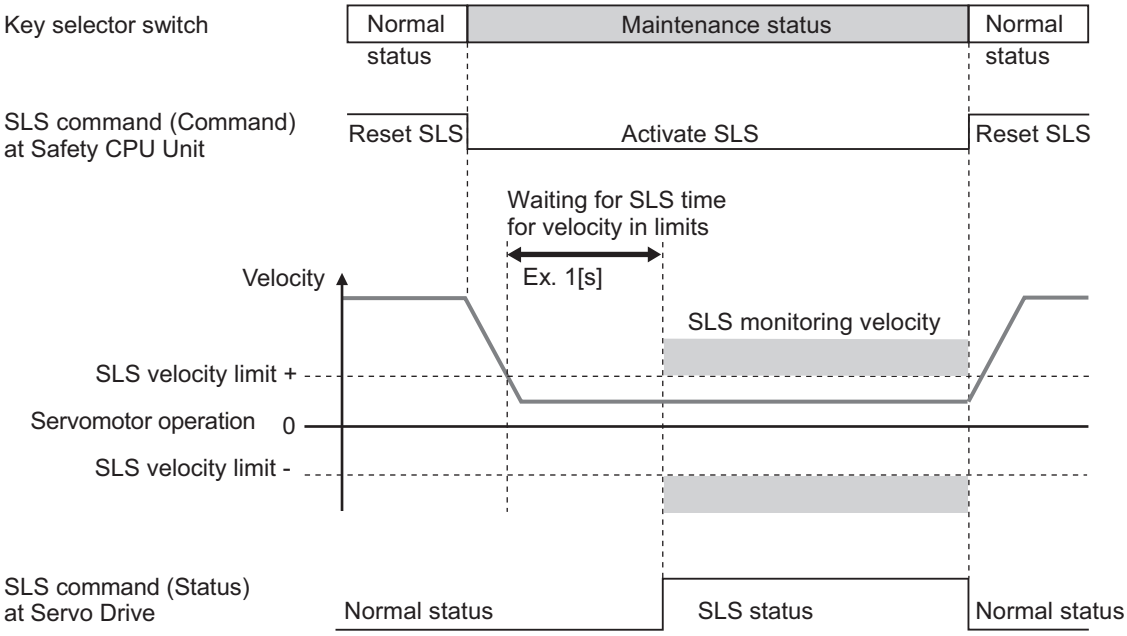

Configuration of EtherCAT Network

Edit configuration of EtherCAT Network

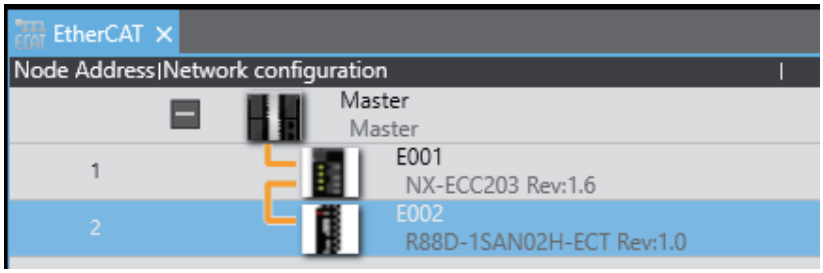

Edit the device configuration of coupler unit.

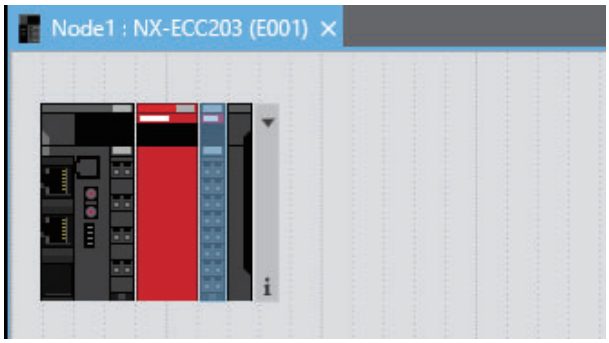

PDO Mapping

Confirm that object 1610 hex (17th receive PDO Mapping) and 1A10 hex (17th transmit PDO Mapping) are assigned to PDO mapping list of a Servo Drive.

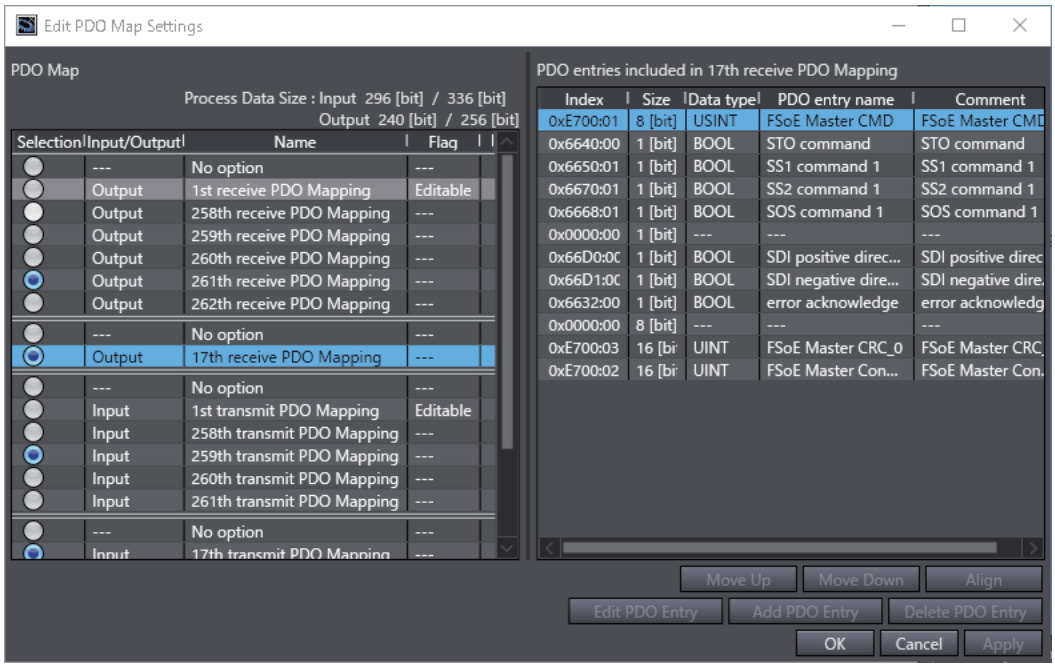

Select

of a safety controller with multi-view explorer.

Develop the Servo Drive of Safety I/O and double-click SRA parameter.

SLS function is set with Safety Function Assignment Settings.

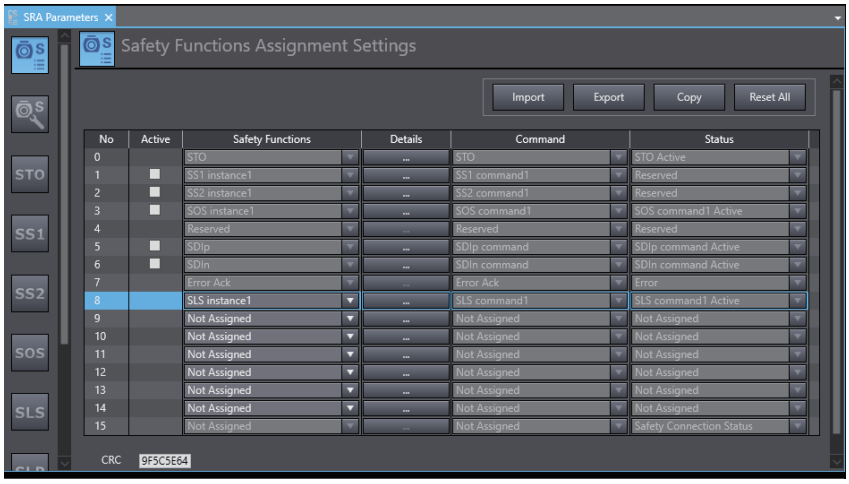

Setting of SLS Function

Click

button for SLS function selected at a screen of the Safety Functions Assignment Settings or click

SLS function setting button to select instance numbers for the set SLS function.

Set SLS time to velocity monitoring, SLS velocity limit and SLS time for velocity in limits.

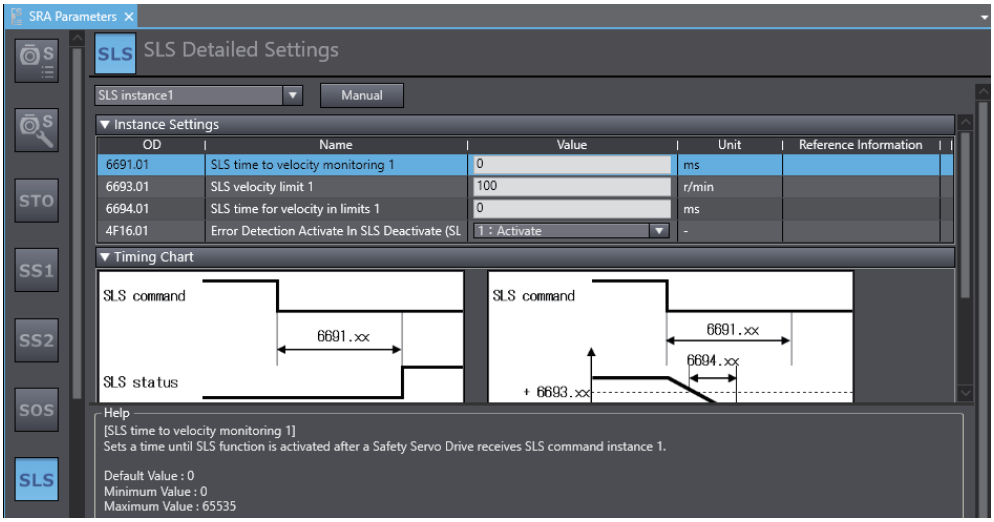

Safety Input Terminal Setting

Select new_SafetyCPU0 and open a screen of NX-SIH400 setting to set input terminals.

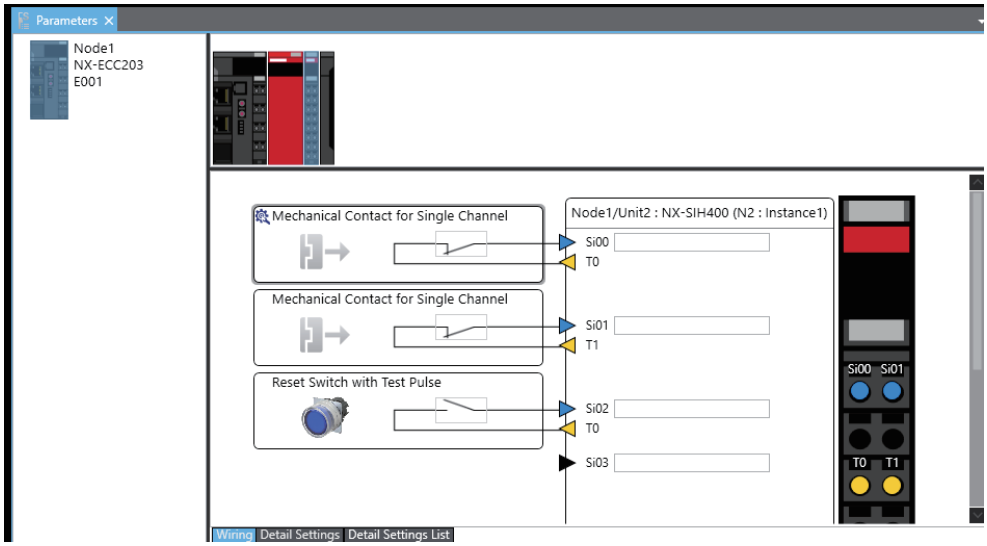

Safety I/O Map Setting

Select new_SafetyCPU0 to display I/O map. Edit variables.

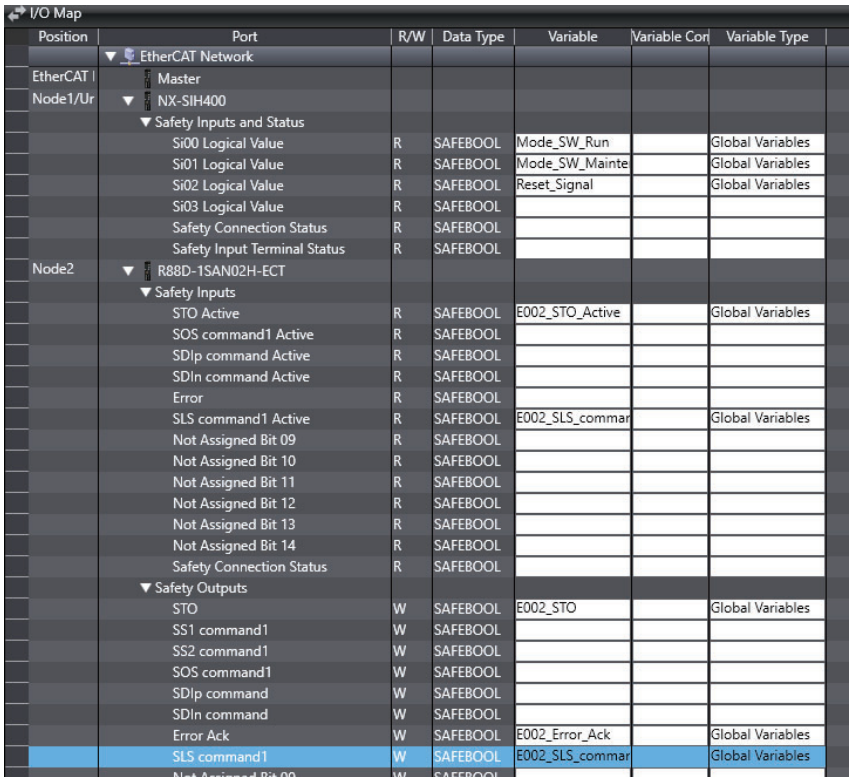

I/O Map

Position	Port	R/W	Data Type	Variable	Variable Con	Variable Type
	EtherCAT Network					
EtherCAT I	Master					
Node1/Ur	NX-SIH400					
	Safety Inputs and Status					
	Si00 Logical Value	R	SAFEBOOL	Mode_SW_Run		Global Variables
	Si01 Logical Value	R	SAFEBOOL	Mode_SW_Mainte		Global Variables
	Si02 Logical Value	R	SAFEBOOL	Reset_Signal		Global Variables
	Si03 Logical Value	R	SAFEBOOL			
	Safety Connection Status	R	SAFEBOOL			
	Safety Input Terminal Status	R	SAFEBOOL			
Node2	R88D-1SAN02H-ECT					
	Safety Inputs					
	STO Active	R	SAFEBOOL	E002_STO_Active		Global Variables
	SOS command1 Active	R	SAFEBOOL			
	SDIp command Active	R	SAFEBOOL			
	SDIn command Active	R	SAFEBOOL			
	Error	R	SAFEBOOL			
	SLS command1 Active	R	SAFEBOOL	E002_SLS_commar		Global Variables
	Not Assigned Bit 09	R	SAFEBOOL			
	Not Assigned Bit 10	R	SAFEBOOL			
	Not Assigned Bit 11	R	SAFEBOOL			
	Not Assigned Bit 12	R	SAFEBOOL			
	Not Assigned Bit 13	R	SAFEBOOL			
	Not Assigned Bit 14	R	SAFEBOOL			
	Safety Connection Status	R	SAFEBOOL			
	Safety Outputs					
	STO	W	SAFEBOOL	E002_STO		Global Variables
	SS1 command1	W	SAFEBOOL			
	SS2 command1	W	SAFEBOOL			
	SOS command1	W	SAFEBOOL			
	SDIp command	W	SAFEBOOL			
	SDIn command	W	SAFEBOOL			
	Error Ack	W	SAFEBOOL	E002_Error_Ack		Global Variables
	SLS command1	W	SAFEBOOL	E002_SLS_commar		Global Variables

Safety Program

Open **Exposed Variables** and add variables with BOOL-type into Input to Safety CPU Unit.

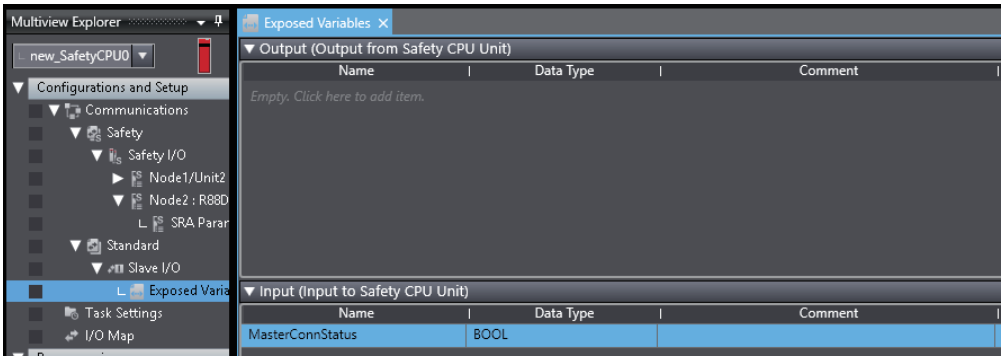

Select

to display an edit screen of safety program.

Design a program that issues a command for Activate SLS when a key selector switch goes into maintenance mode.*1

For the example shown below, the program that constantly gives command to reset STO function is created, because the STO is NOT used.

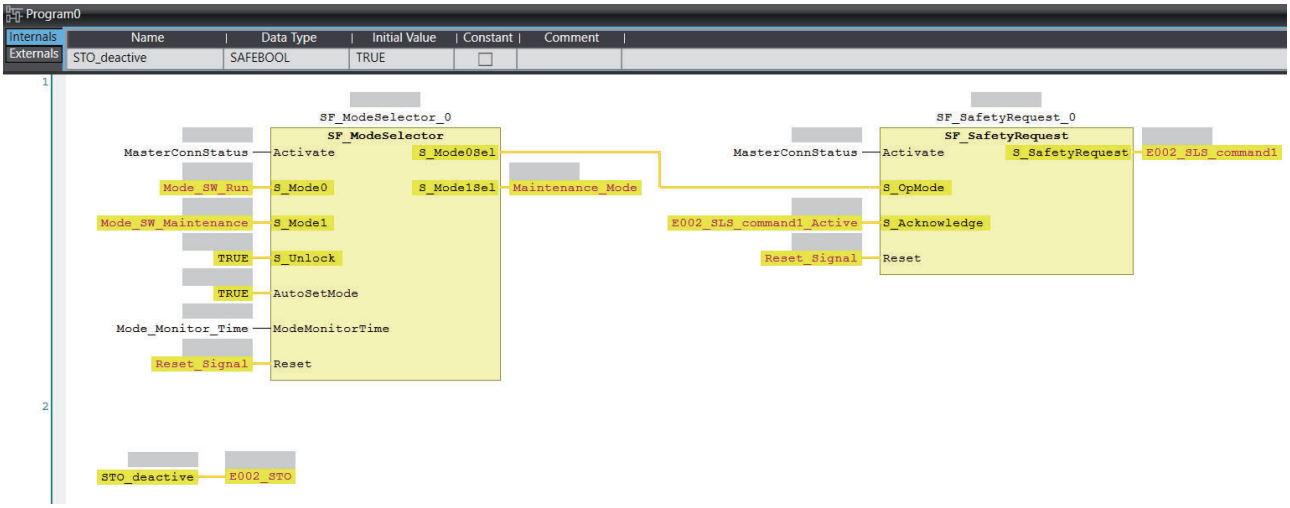

*1. For examples of the program, SF_ModeSelector and SF_SafetyRequest can be inserted from function blocks defined by users of the tool box or Insert function blocks in the Right-click menu. As for the programming procedure, refer to *NX-series Safety Control Unit User's Manual* (Cat. No. Z930).

Standard I/O Map Setting

A function selected at a screen of the Safety Functions Assignment Settings is displayed in **Mirror Safety statusword** of Servo Drive. Variables are created to bits where SLS function was assigned.

I/O Map

Position	Port	Description	R/W	Data Type	Variable	Va
	EtherCAT Network Configuration					
Node1	NX-ECC203					
Node2	R88D-1SAN02H-ECT					
	Controlword	Controlword	W	WORD		
	Target position	Target position	W	DINT		
	Target velocity	Target velocity	W	DINT		
	Target torque	Target torque	W	INT		
	Modes of operation	Modes of operation	W	SINT		
	Touch probe function	Touch probe function	W	WORD		
	Max profile velocity	Max profile velocity	W	UDINT		
	Positive torque limit value	Positive torque limit value	W	UINT		
	Negative torque limit value	Negative torque limit value	W	UINT		
	Error code	Error code	R	WORD		
	Statusword	Statusword	R	WORD		
	Position actual value	Position actual value	R	DINT		
	Torque actual value	Torque actual value	R	INT		
	Modes of operation display	Modes of operation display	R	SINT		
	Touch probe status	Touch probe status	R	WORD		
	Touch probe pos1 pos value	Touch probe pos1 pos valu	R	DINT		
	Touch probe pos2 pos value	Touch probe pos2 pos valu	R	DINT		
	Digital inputs	Digital inputs	R	DWORD		
	Mirror Safety controlword	Mirror Safety controlword	R	UINT		
	STO command	Mirror Safety Controlword	R	BOOL	E002_STO_command	
	SS1 command 1	Mirror Safety Controlword	R	BOOL		
	SS2 command 1	Mirror Safety Controlword	R	BOOL		
	SOS command 1	Mirror Safety Controlword	R	BOOL		
	Mirror Safety Controlword 4	Mirror Safety Controlword	R	BOOL		
	SDI positive direction command	Mirror Safety Controlword	R	BOOL		
	SDI negative direction command	Mirror Safety Controlword	R	BOOL		
	error acknowledge	Mirror Safety Controlword	R	BOOL		
	SLS command 1	Mirror Safety Controlword	R	BOOL	E002_SLS_command_1	

Variables are created to Safety Master Connection Status of Safety CPU Unit and variables defined in Exposed Variables of Safety CPU.

I/O Map

Position	Port	Description	R/W	Data Type	Variable
	EtherCAT Network Configuration				
Node1	NX-ECC203				
	Sysmac Error Status	Sysmac error status on Slav	R	BYTE	
	NX Unit Registration Status 63	Status whether the NX Unit	R	ARRAY[0..63]	
	NX Unit I/O Data Active Status 63	Status whether the NX Unit	R	ARRAY[0..63]	
Unit1	NX-SL3300				
	Safety CPU Status	Status of Safety CPU Unit fo	R	UINT	
	Normal Operating	Safety program is running	R	BOOL	
	Program Operating	Safety program is running	R	BOOL	
	Program No Fault	No system event more than	R	BOOL	
	Safety Master Connection Status	All safety master connectio	R	BOOL	N1_Safety_Master_Connection_Status
	MasterConnStatus		W	BOOL	N1_MasterConnStatus
Unit2	NX-SIH400				
Node2	R88D-1SAN02H-ECT				
	CPU/Expansion Racks				

Set so that Safety Master Connection Status can be read in the Safety CPU Program after you assign Safety Master Connection Status of Safety CPU Unit to Exposed Variables of Safety CPU in the standard program.

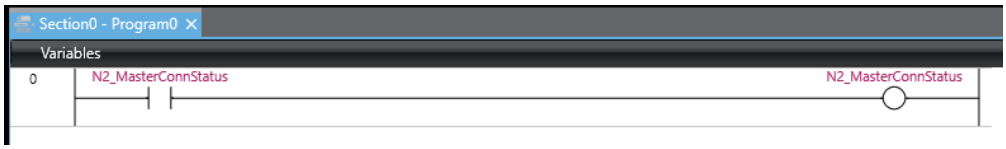

Standard Program

Select

to display a screen for editing program.

Design a program that decelerates the motor's velocity when SLS command is activated.

● Sample Program

If *StartPg* is TRUE, check that the Servo Drive is ready.

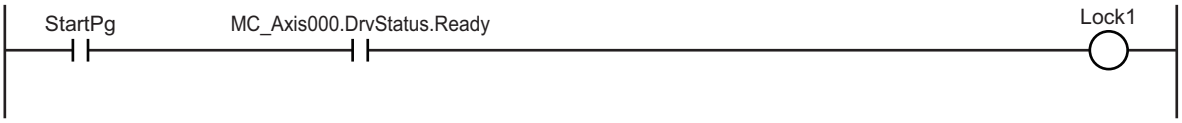

If the Servo Drive is ready, the Servo is turned ON.

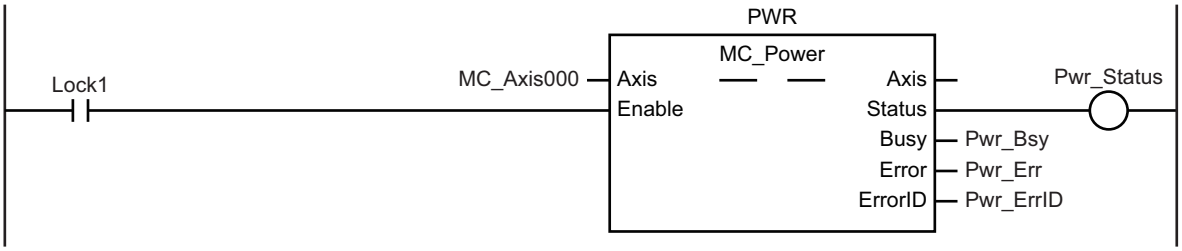

If a minor fault level error occurs for axis 1, the error handler for the device (FaultHandler) is executed.

Program the error handler (FaultHandler) according to the device.

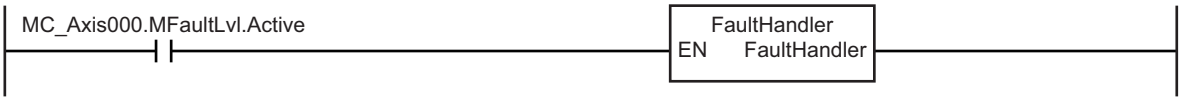

When *Sensor1* changes to TRUE, the MC_MoveVelocity (Velocity Control) instruction is executed.

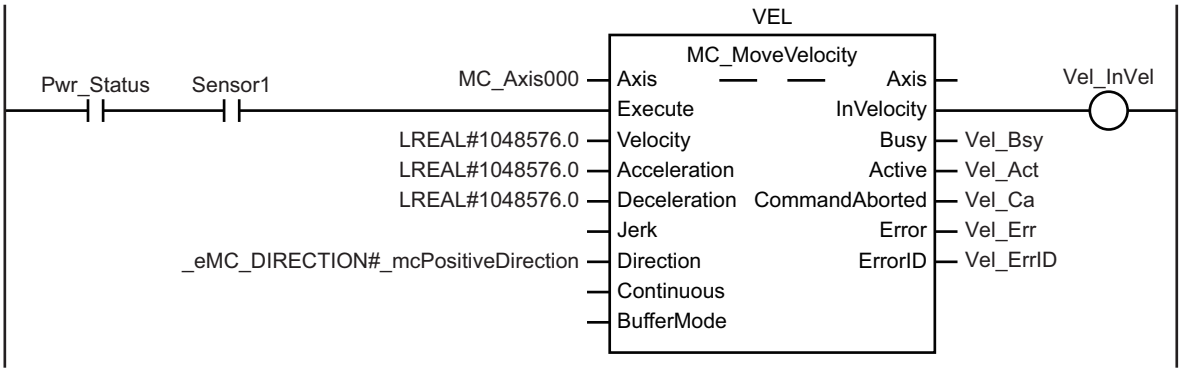

Change the override factor according to Activate SLS or Reset SLS during execution of the MC_MoveVelocity (Velocity Control) instruction.

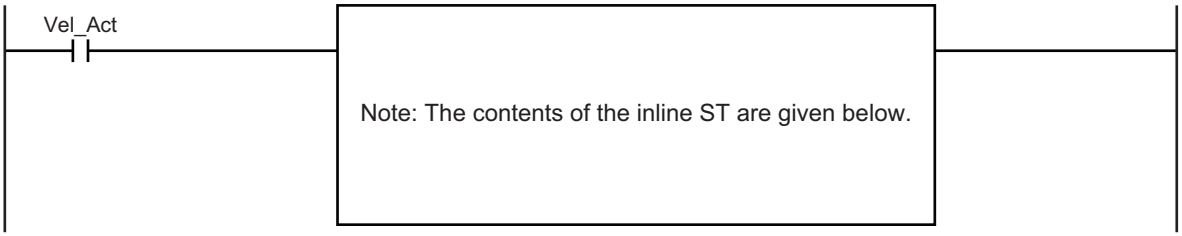

The MC_SetOverride (Set Override Factors) instruction is executed during execution of the MC_MoveVelocity (Velocity Control) instruction.

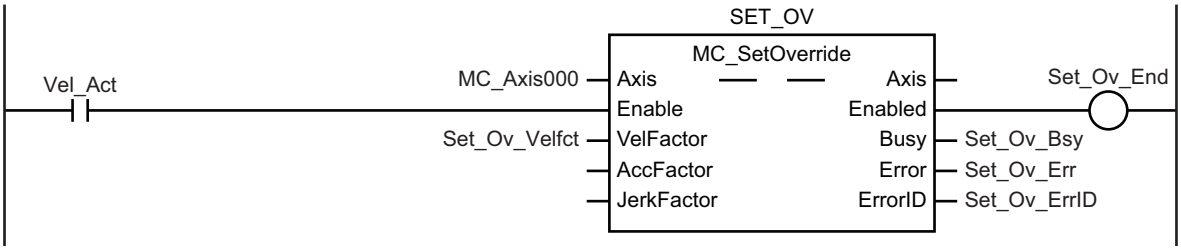

- **Details about Inline ST**

```
IF(E002_SLS_command_1=TRUE)THEN
   Set_Ov_Velfct:=LREAL#100.0;
ELSE
   Set_Ov_Velfct:=LREAL#10.0;
END_IF;
```

Check of Operation Program

Confirm that a designed program operates properly.

Open a data trace screen for a standard controller.

Click menu button to select **Add safety related trace target**.

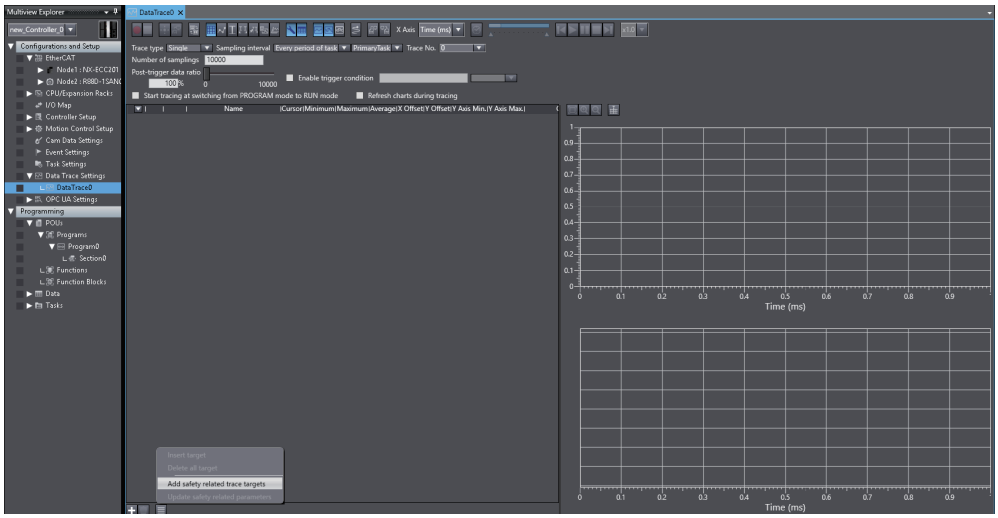

In option dialogue of safety related trace target, select an axis and a safety function and click **Add items to the list** to click **OK** button.

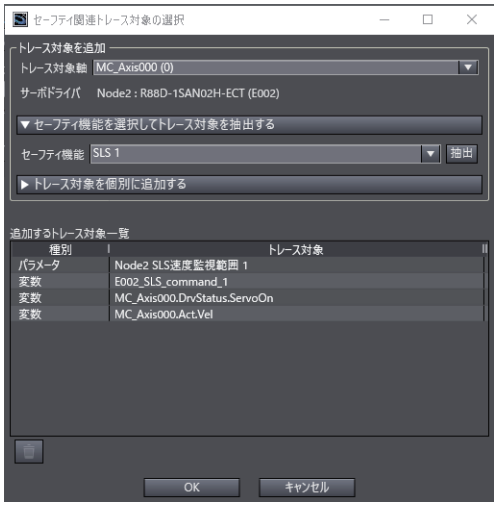

Execute the data trace. Check parameters for the set safety functions and observe the axis variables for trace target to confirm on whether safety functions are operated normally or not.

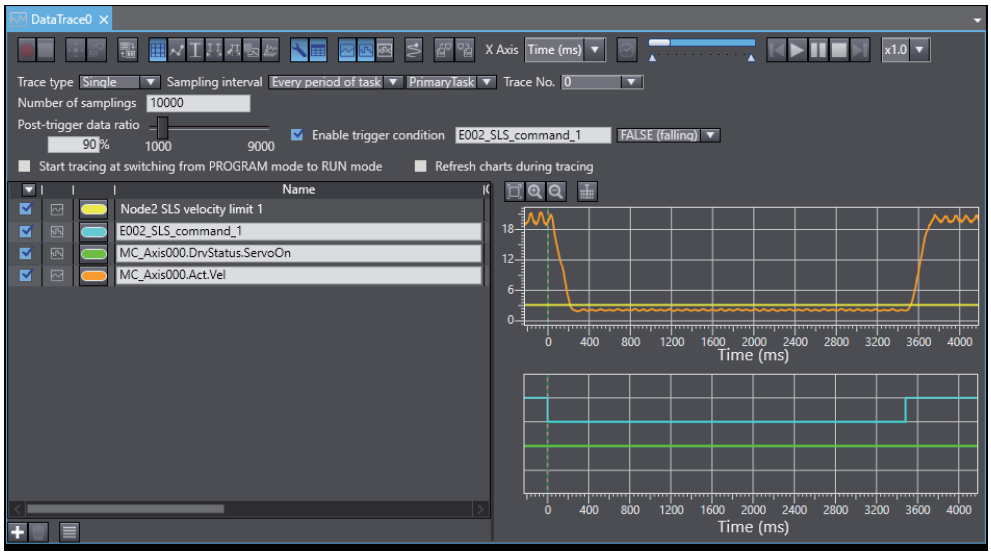

A-5-3 Function block for 1S-series Servo Drives Advance Type

This section describes the function blocks for the 1S-series Servo Drives Advance Type. You can realize SS1 function and SS2 function easily by using these function blocks. For the latest information, see the references of those by Sysmac Studio.

OC_SF_SS1

This FB controls the requests of safety function SS1 and STO to 1SA.

Instruction	Name	Graphic expression
OC_SF_SS1	SS1 Activate	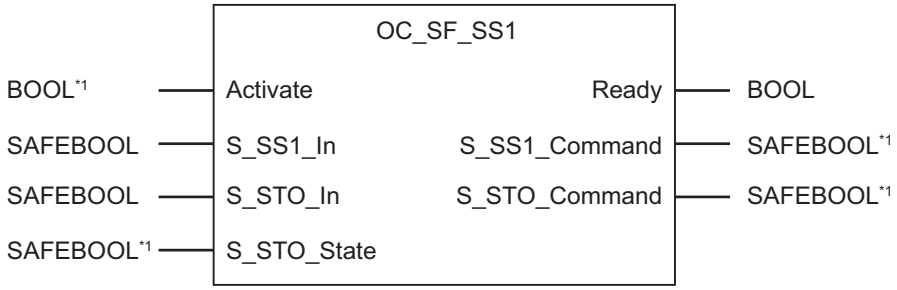

*1. Set the corresponding device variables to the following variables.

Variable name	Device variables or constants
Activate	Safety master connection status “SafetyMasterConnectionStatus”
S_SS1_Command	“SS1 command” of 1SA
S_STO_Command	“STO” of 1SA
S_STO_State	“STO_Active” of 1SA

● Variables

- Input Variables

Variable	Data type	Valid range	Default	Description
Activate	BOOL	TRUE or FALSE	FALSE	Enable/disable the FB. Input variables or constants.
S_SS1_In	SAFEBOOL	TRUE or FALSE	FALSE	Request the SS1 operation mode of the connected 1SA. FALSE: Requests the safety mode (activates SS1) TRUE: Requests the operation mode (not the safety mode) (deactivates SS1)
S_STO_In	SAFEBOOL	TRUE or FALSE	FALSE	Request the STO operation mode of the connected 1SA. FALSE: Requests the safety mode (activates STO) TRUE: Requests the operation mode (not the safety mode) (deactivates STO)

Variable	Data type	Valid range	Default	Description
S_STO_State	SAFEBOOL	TRUE or FALSE	FALSE	This is the STO mode responding of the connected 1SA. Set the device variables corresponding to STO Active. FALSE: Operation mode (not the safety mode) TRUE: Safety mode (STO state)

- Output Variables

Variable	Data type	Valid range	Default	Description
Ready	BOOL	TRUE or FALSE	FALSE	The ready flag. FALSE: Indicates that the FB is not active and the program is not executed. This is useful in DEBUG Mode or to activate/deactivate additional FBs, as well as for further processing in the functional program. TRUE: Indicates that the FB is active and that the output results have been stored. This variable is used for debugging or for further processing in the user program.
S_SS1_Command	SAFEBOOL	TRUE or FALSE	FALSE	This is the request for the SS1 operation mode of the connected 1SA. Set the device variables corresponding to the SS1 Command. FALSE: Requests the safety mode (activates SS1) TRUE: Requests the operation mode (not the safety mode) (deactivates SS1).
S_STO_Command	SAFEBOOL	TRUE or FALSE	FALSE	This is the request for the STO operation mode of the connected 1SA. Set the device variable corresponding to the STO Command. FALSE: Requests the safety mode (activates STO). TRUE: Requests the operation mode (not the safety mode) (deactivates STO). When the input variables "S_STO_In" and "S_STO_State" are TRUE and the input variable "S_SS1_In" changes from FALSE to TRUE, set the output variable "S_STO_Command" to FALSE for one safety task period to deactivate the STO state.

Function

- The value of the input variable "S_SS1_In" is linked with the output variable "S_SS1_Command".
- The value of the input variable "S_STO_In" is linked with the output variable "S_STO_Command".
- When the input variables "S_STO_In" and "S_STO_State" are TRUE and the input variable "S_SS1_In" changes from FALSE to TRUE, set the output variable "S_STO_Command" to FALSE for one safety task period to deactivate the STO state.

Sample program and timing chart

A sample program and timing chart are given below.

When an emergency stop switch (ESTOP1) is pushed, 1SA executes STO function and stops immediately.

When the light of safety light curtain 1 (SLC1) or safety light curtain 2 (SLC2) is intercepted, 1SA executes SS1 function and shifts to STO state.

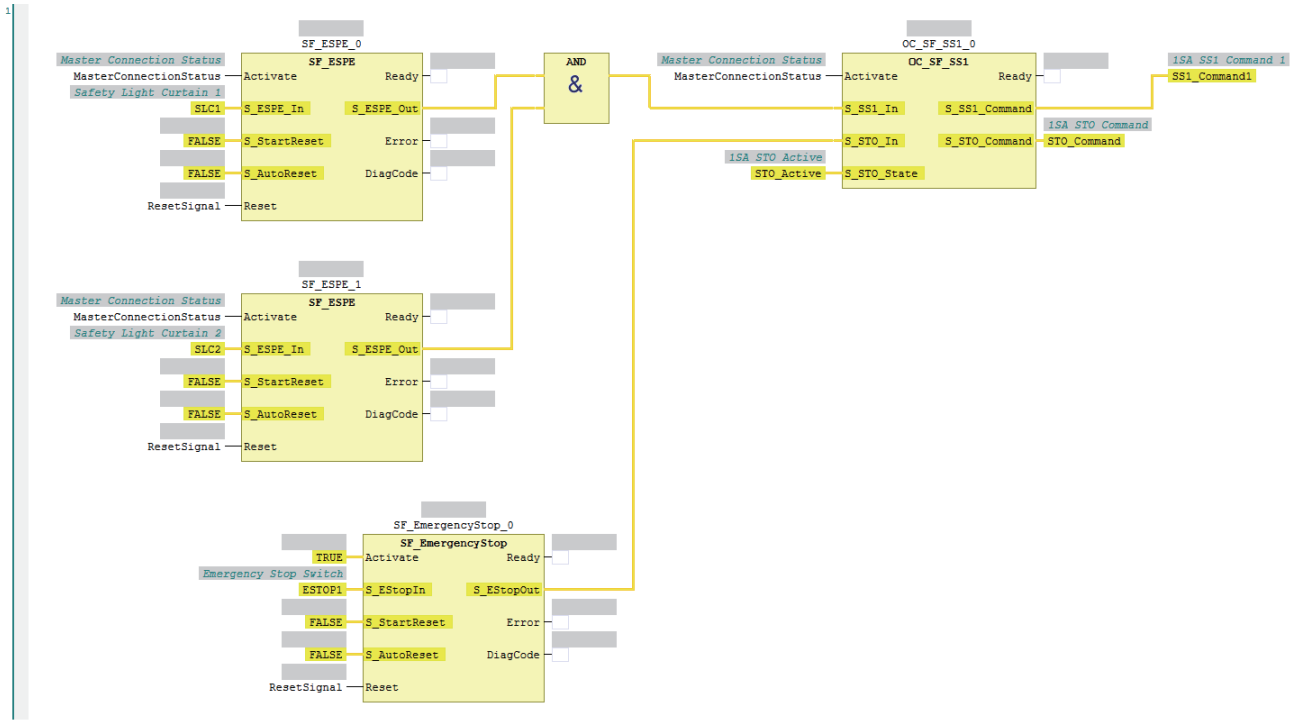

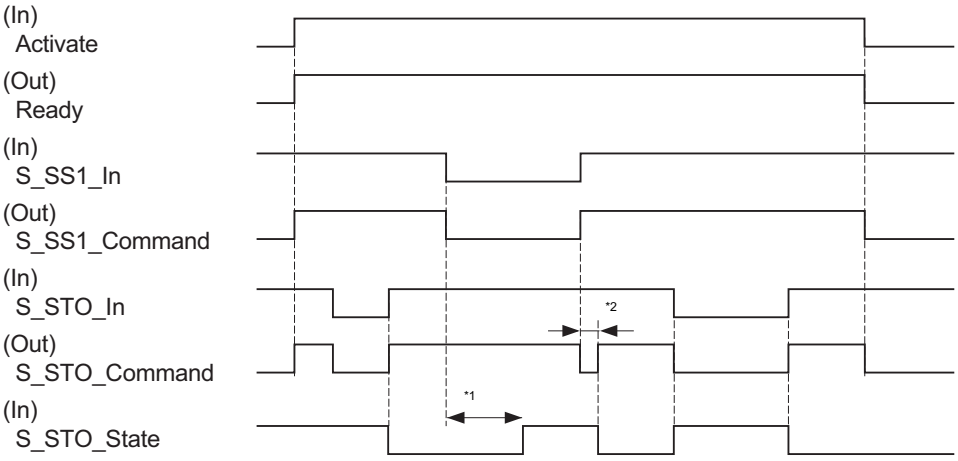

*1. Time until 1SA receives SS1 activate command and starts STO.

*2. When “S_STO_In” and “S_STO_State” are TRUE, and “S_SS1_In” changes from FALSE to TRUE, FALSE is set to “S_STO_Command” for one safety task period to deactivate STO state.

OC_SF_SS2

This FB controls the requests of safety function SS2 and SOS to 1SA.

Instruction	Name	Graphic expression
OC_SF_SS2	SS2 Activate	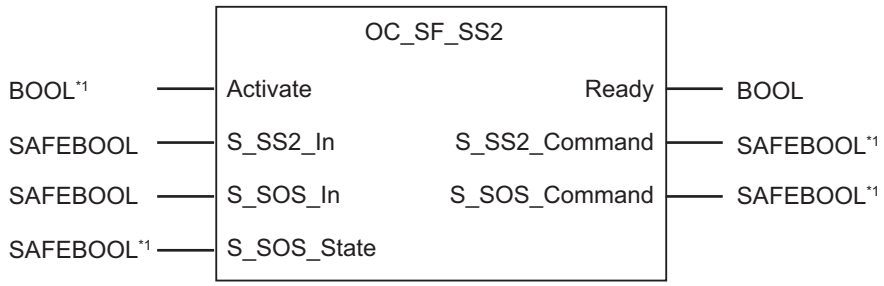

*1. Set the corresponding device variables to the following variables.

Variable name	Device variables or constants
Activate	Safety master connection status “SafetyMasterConnectionStatus”
S_SS2_Command	“SS2 command” of 1SA
S_SOS_Command	“SOS command” of 1SA
S_SOS_State	“SOS command Active” of 1SA

● Variables

- Input Variables

Variable	Data type	Valid range	Default	Description
Activate	BOOL	TRUE or FALSE	FALSE	Enable/disable the FB. Input variables or constants.
S_SS2_In	SAFEBOOL	TRUE or FALSE	FALSE	Request the SS2 operation mode of the connected 1SA. FALSE: Requests the safety mode (activates SS2) TRUE: Requests the operation mode (not the safety mode) (deactivates SS2)
S_SOS_In	SAFEBOOL	TRUE or FALSE	FALSE	Request the SOS operation mode of the connected 1SA. FALSE: Requests the safety mode (activates SOS) TRUE: Requests the operation mode (not the safety mode) (deactivates SOS)
S_SOS_State	SAFEBOOL	TRUE or FALSE	FALSE	This is the SOS mode responding of the connected 1SA. Set the device variables corresponding to SOS command Active. FALSE: Operation mode (not the safety mode) TRUE: Safety mode (SOS state)

- Output Variables

Variable	Data type	Valid range	Default	Description
Ready	BOOL	TRUE or FALSE	FALSE	The ready flag. FALSE: Indicates that the FB is not active and the program is not executed. This is useful in DEBUG Mode or to activate/deactivate additional FBs, as well as for further processing in the functional program. TRUE: Indicates that the FB is active and that the output results have been stored. This variable is used for debugging or for further processing in the user program.
S_SS2_Command	SAFEBOOL	TRUE or FALSE	FALSE	This is the request for the SS2 operation mode of the connected 1SA. Set the device variables corresponding to the SS2 Command. FALSE: Requests the safety mode (activates SS2) TRUE: Requests the operation mode (not the safety mode) (deactivates SS2).
S_SOS_Command	SAFEBOOL	TRUE or FALSE	FALSE	This is the request for the SOS operation mode of the connected 1SA. Set the device variable corresponding to the SOS Command. FALSE: Requests the safety mode (activates SOS). TRUE: Requests the operation mode (not the safety mode) (deactivates SOS). When the input variables "S_SOS_In" and "S_SOS_State" are TRUE and the input variable "S_SS2_In" changes from FALSE to TRUE, set the output variable "S_SOS_Command" to FALSE for one safety task period to deactivate the SOS state.

● Function

- The value of the input variable "S_SS2_In" is linked with the output variable "S_SS2_Command".
- The value of the input variable "S_SOS_In" is linked with the output variable "S_SOS_Command".
- When the input variables "S_SOS_In" and "S_SOS_State" are TRUE and the input variable "S_SS2_In" changes from FALSE to TRUE, set the output variable "S_SOS_Command" to FALSE for one safety task period to deactivate the SOS state.

Sample program and timing chart

A sample program and timing chart are given below.

When an emergency stop switch (ESTOP1) is pushed, 1SA executes SOS function and stops immediately.

When the light of safety light curtain 1 (SLC1) or safety light curtain 2 (SLC2) is intercepted, 1SA executes SS2 function and shifts to SOS state.

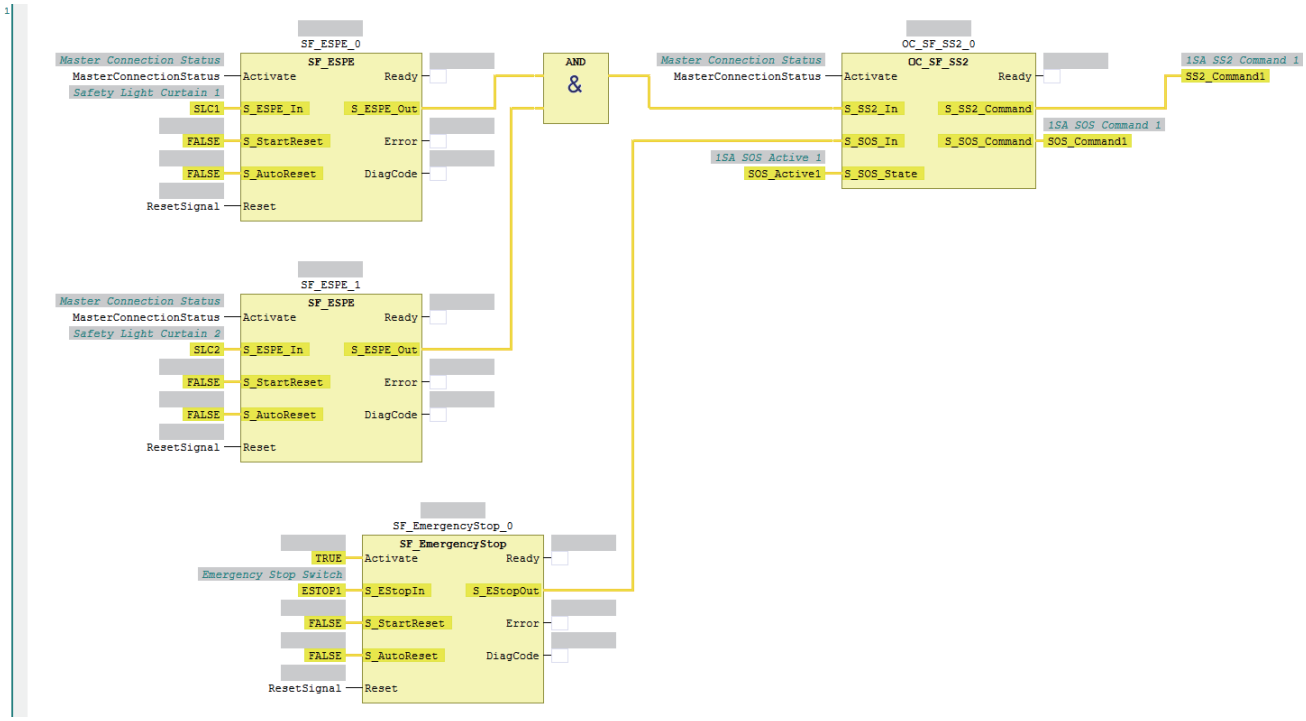

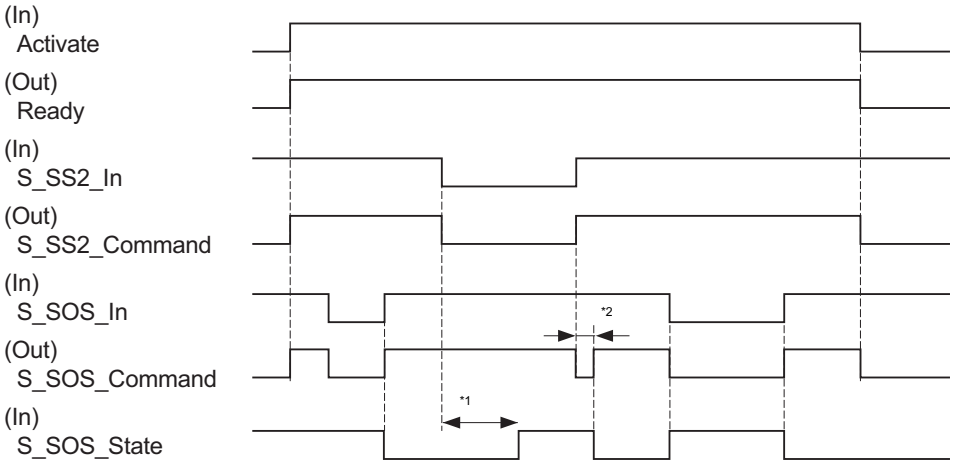

*1. Time until 1SA receives SS2 activate command and starts SOS.

*2. When “S_SOS_In” and “S_SOS_State” are TRUE, and “S_SS2_In” changes from FALSE to TRUE, FALSE is set to “S_SOS_Command” for one safety task period to deactivate SOS state.

OC_SF_ResetSafetyError

This FB resets the error detected by monitoring the safety function for 1SA. Please use this FB in combination with 1SA series.

When the input variable "Reset" changes from FALSE to TRUE, and it changes from TRUE to FALSE after the time set in input variable "ResetPulseWidth" elapses, this function block outputs TRUE to the output variable "ErrorAck" for one safety task period. This FB is used to satisfy the requirements for the manual reset function specified in ISO 13849-1 Ch. 5.2.2.

Instruction	Name	Graphic expression
OC_SF_Reset-SafetyError	Reset safety error for 1SA	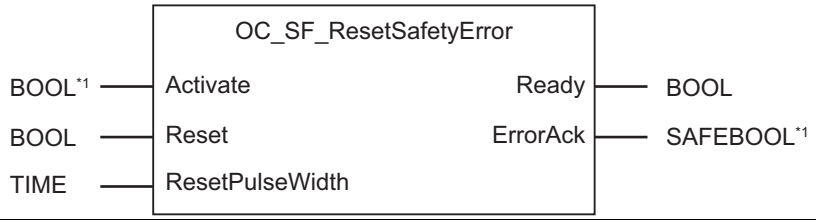

*1. Set the corresponding device variables to the following variables.

Variable name	Device variables or constants
Activate	Safety master connection status “Safety-MasterConnectionStatus”
ErrorAck	“ErrorAck” of 1SA

● Variables

- Input Variables

Variable	Data type	Valid range	Default	Description
Activate	BOOL	TRUE or FALSE	FALSE	Enable/disable the FB. Input variables or constants.
Reset	BOOL	TRUE or FALSE	FALSE	Request the connected 1SA to reset the error detected by the safety function.
ResetPulseWidth	TIME	Depends on data type.	T#350ms	Specify the ON time length of Reset (LHL signal). Ignore the Reset signals less than this set value. When the ON time length is set less than 100ms, it operates at the maximum value of the TIME data type. (T#49d17h2m47s295ms)

- Output Variables

Variable	Data type	Valid range	Default	Description
Ready	BOOL	TRUE or FALSE	FALSE	The ready flag. FALSE: Indicates that the FB is not active and the program is not executed. This is useful in DEBUG Mode or to activate/deactivate additional FBs, as well as for further processing in the functional program. TRUE: Indicates that the FB is operating and that the output results have been stored. This variable is used for debugging or for further processing in the user program.
ErrorAck	SAFEBOOL	TRUE or FALSE	FALSE	Request to reset the error detected by the safety function of the connected 1SA. TRUE: Requests to reset the safety error. When the input variable "Reset" changes from FALSE to TRUE, and it changes from TRUE to FALSE after the time set in input variable "ResetPulseWidth" elapses, outputs TRUE for one safety task period.

Function

- When the input variable Reset changes from FALSE to TRUE, and it changes from TRUE to FALSE after the time set in input variable ResetPulseWidth elapses, this function block substitutes TRUE to the output variable ErrorAck for one safety task period.
- If the set value in ResetPulseWidth is smaller than 100 ms, this FB behaves as the maximum value of the TIME datatype (T#49d17h2m47s295ms) is set to this variable.
- When the output variable ErrorAck is set to TRUE, the safety output is enabled by resetting the 1SA error.

Sample program and timing chart

A sample program and timing chart are given below.

When error reset signal (ErrorReset) changes from FALSE to TRUE, and it changes from TRUE to FALSE after the 350ms elapses, 1SA error is reset by ErrorAckCommand.

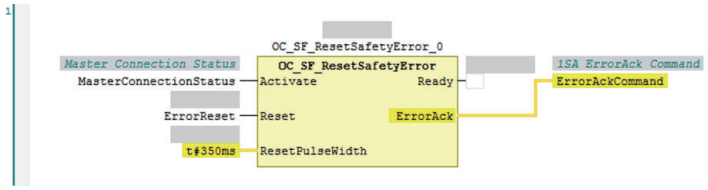

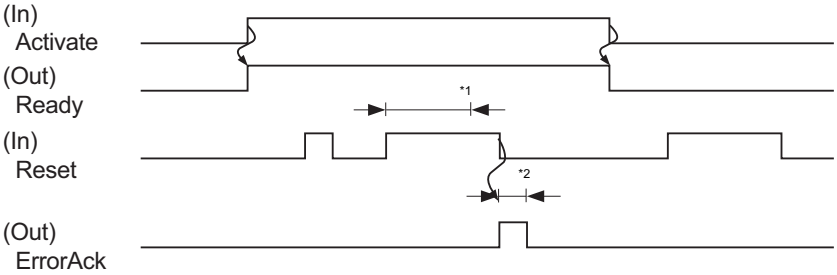

*1. Time set with input variable “ResetPulseWidth”

*2. One safety task period

A-6 Response Time in EtherCAT Process Data Communications

The input response time and output response time of each slave unit are required to calculate the system I/O response time in the EtherCAT process data communications.

The specifications of this product are given below.

Refer to the manuals for your master unit when you calculate the system I/O response time.

A-6-1 Input Response Time

The input response time of this product is given below.

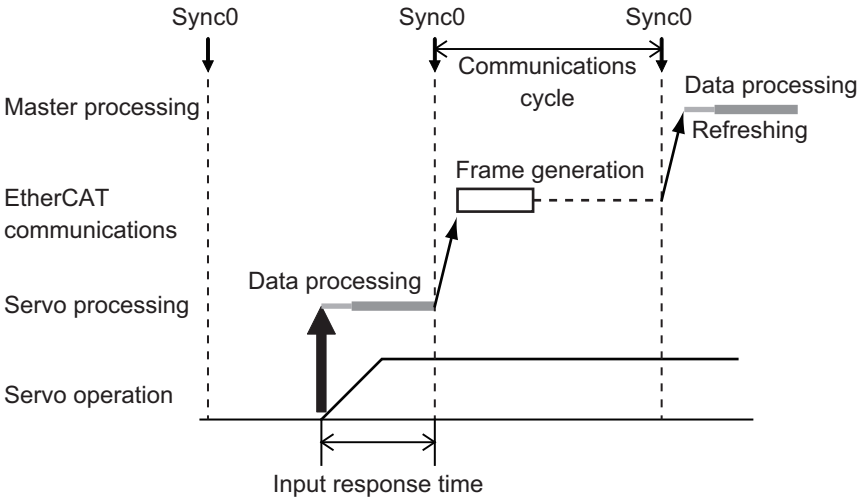

Input response time: Communication cycle - Shift time

A-6-2 Output Response Time

The output response time of this product is given below.

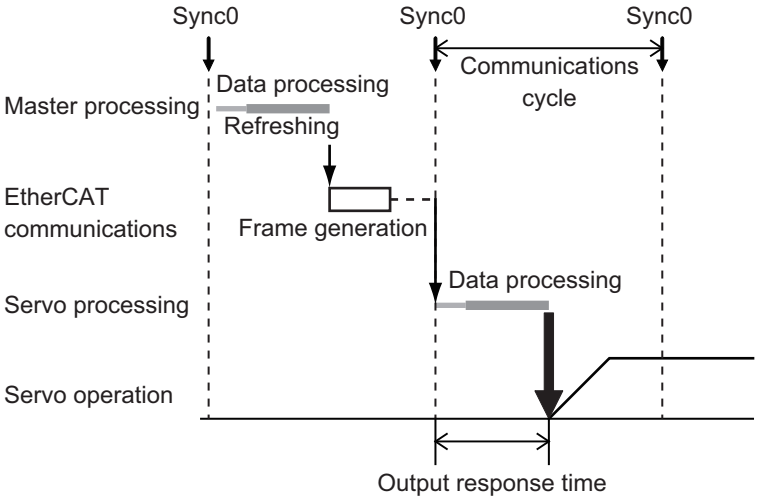

Output response time: 100 μs

A-7 Version Information

This section describes the relationship between the unit versions of 1S-series Servo Drives Advance Type and the Sysmac Studio versions, and the functions that were added or changed for each unit version.

A-7-1 Relationship between Unit Versions and Sysmac Studio Versions

This section also describes how the unit versions of 1S-series Servo Drives Advance Type correspond to Sysmac Studio versions.

Unit Versions and Corresponding Sysmac Studio Versions

The following table gives the relationship between unit versions of 1S-series Servo Drives Advance Type and the corresponding Sysmac Studio versions.

Unit version	Corresponding version of Sysmac Studio
Ver.1.0	Ver.1.44.1 or higher

I

Index

I

Index

Numerics

7-segment LED Display 10-5

A

Absolute encoder 2-5, 3-32
Accessories 31
AL Status Code List 12-41

B

Brake Interlock Connector (CN12)
..... 1-7, 1-9, 1-11, 3-24, 3-25

C

CAN application protocol over EtherCAT 5-5, A-12
Charge lamp 1-6, 1-8, 1-10
Checking the Error Occurrence 12-2
CiA 402 Drive Profile A-2
CoE Objects A-12
Control Circuit Connector (CND) 3-10
Control I/O Connector (CN1) 1-6, 1-8, 1-10, 3-14
Control Power Supply Connector (CND) 1-8, 1-11
Controlword A-2, A-41

D

DC Mode 5-16
Decelerator 2-13, 2-43, 2-44, 2-46, 3-44
Distribution Completed Output (DEN) 7-8, 7-14

E

EDM 3-14, 8-24
EDM output 8-24
EDM Output Circuit 3-22
Emergency Messages 5-17
Encoder 3-32
Encoder Connector (CN2) 1-7, 1-9, 1-10, 3-26
Error Clear Attribute Output (ERR-ATB) 7-8, 7-13
Error List 12-10, 12-16, A-116
Error Output (ERR) 3-15, 3-19, 7-8, 7-11
Error Stop Input (ESTP) 3-17, 7-3, 7-7
EtherCAT Communications Connector 1-6, 3-26
EtherCAT Slave Information (ESI) 5-20
EtherCAT State Machine (ESM) 5-6
Event code A-116
External Latch Input 3-17, 7-3
External Regeneration Resistance Unit
..... 2-19, 2-55, 3-73, 3-74, 4-47
External Regeneration Resistor
..... 2-19, 2-55, 3-72, 4-47, 4-48

F

Free-Run Mode 5-16
Function A-229

H

Home Proximity Input (DEC) 3-17, 7-3, 7-7

I

ID switch 1-6, 1-10, 5-2
indicators 1-10, 5-2
Information 12-14

L

LED 1-10, 10-5

M

Main Circuit Connector (CNA) 1-6, 1-11, 3-9
Main Circuit Connector A (CNA) 1-11, 3-10
Main Circuit Connector B (CNB) 1-8, 1-11, 3-10
Modes of Operation A-5
Monitor input 3-17, 7-3, 7-7
Motor Connector (CNC) 1-7, 1-9, 1-11, 3-9, 3-11

N

Negative Drive Prohibition Input 7-3, 7-7
Negative Torque Limit Input (NCL) 7-3, 7-7
Node Address 5-2, 5-19
Noise Filter 3-77

O

object dictionary A-12
Object List A-77
One-degree-of-freedom (ODF) control 6-2

P

PDO 5-7
PDO Mapping 5-8
PDS state A-2
Position Command Status Output (PCMD) 7-8, 7-13
Position Completion Output (INP1, INP2) 7-8, 7-11
Position control 6-2, 6-5
Positive Drive Prohibition Input (POT) 3-17, 7-3, 7-7
Positive Torque Limit Input (PCL) 7-3, 7-7

R

Reactor 2-20, 2-56, 3-75
Remote output 3-19
Remote Output (R-OUT1 to R-OUT3) 7-8, 7-14
RxPDO 5-7

S

Safe brake control connector (CN15) 1-12
Safety I/O Signal
..... 3-21, 8-3, 8-4, 8-7, 8-11, 8-12, 8-15, 8-23
Safety Input Circuits 3-22
Safety signal connector (CN14) 1-11
SDO 5-15
SDO communications 5-15
Servo Drive
Characteristics 3-4
Dimension 2-21
General Specifications 3-3
How to Read Model Numbers 2-4
Installation Conditions 4-2
Model Table 2-9
Replacing 12-4
Servo Drive and Servomotor Combination Tables ..2-12
Servo Ready Output (READY) 3-19, 7-8, 7-11
Servomotor
Characteristics 3-33
General Specifications 3-31
Installation Conditions 4-5
Model Tables 2-10
Replacing 12-4
Servo Drive and Servomotor Combination Tables ..2-12
Servomotor model number 2-5
Slave Information Interface (SII) 5-21
State Machine A-2
Status Indicators 1-6, 1-10, 5-3
Statusword A-2, A-42
STO function 8-22
Sysmac Error Status 5-18
Sysmac Studio 1-2, 2-2, 10-9

T

Torque control 6-2, 6-9
Torque Limit Output (TLMT) 7-8, 7-12
Two-degree-of-freedom (TDF) control 6-2
TxPDO 5-7

U

USB connector (CN7) 1-6, 1-11, 3-27

V

Velocity Attainment Detection Output (TGON) 7-8, 7-12
Velocity Conformity Output (VCMP) 7-8, 7-13
Velocity control 6-2, 6-7
Velocity Limiting Output (VLMT) 7-8, 7-13

W

Warning List 12-8
Warning Output (WARN1, WARN2) 7-8, 7-13

Z

Zero Speed Detection Output (ZSP) 7-8, 7-12
Zone Notification Output (ZONE1, ZONE2) 7-8, 7-14

OMRON Corporation **Industrial Automation Company**
Kyoto, JAPAN

Contact: www.ia.omron.com

Regional Headquarters
OMRON EUROPE B.V.
Wegalaan 67-69, 2132 JD Hoofddorp
The Netherlands
Tel: (31)2356-81-300/Fax: (31)2356-81-388

OMRON ELECTRONICS LLC
2895 Greenspoint Parkway, Suite 200
Hoffman Estates, IL 60169 U.S.A.
Tel: (1) 847-843-7900/Fax: (1) 847-843-7787

OMRON ASIA PACIFIC PTE. LTD.
No. 438A Alexandra Road # 05-05/08 (Lobby 2),
Alexandra Technopark,
Singapore 119967
Tel: (65) 6835-3011/Fax: (65) 6835-2711

OMRON (CHINA) CO., LTD.
Room 2211, Bank of China Tower,
200 Yin Cheng Zhong Road,
PuDong New Area, Shanghai, 200120, China
Tel: (86) 21-5037-2222/Fax: (86) 21-5037-2200

Authorized Distributor:

© OMRON Corporation 2020-2021 All Rights Reserved.
In the interest of product improvement,
specifications are subject to change without notice.

Cat. No. I621-E1-04 1221